REV.	DESCRIPTION	DATE

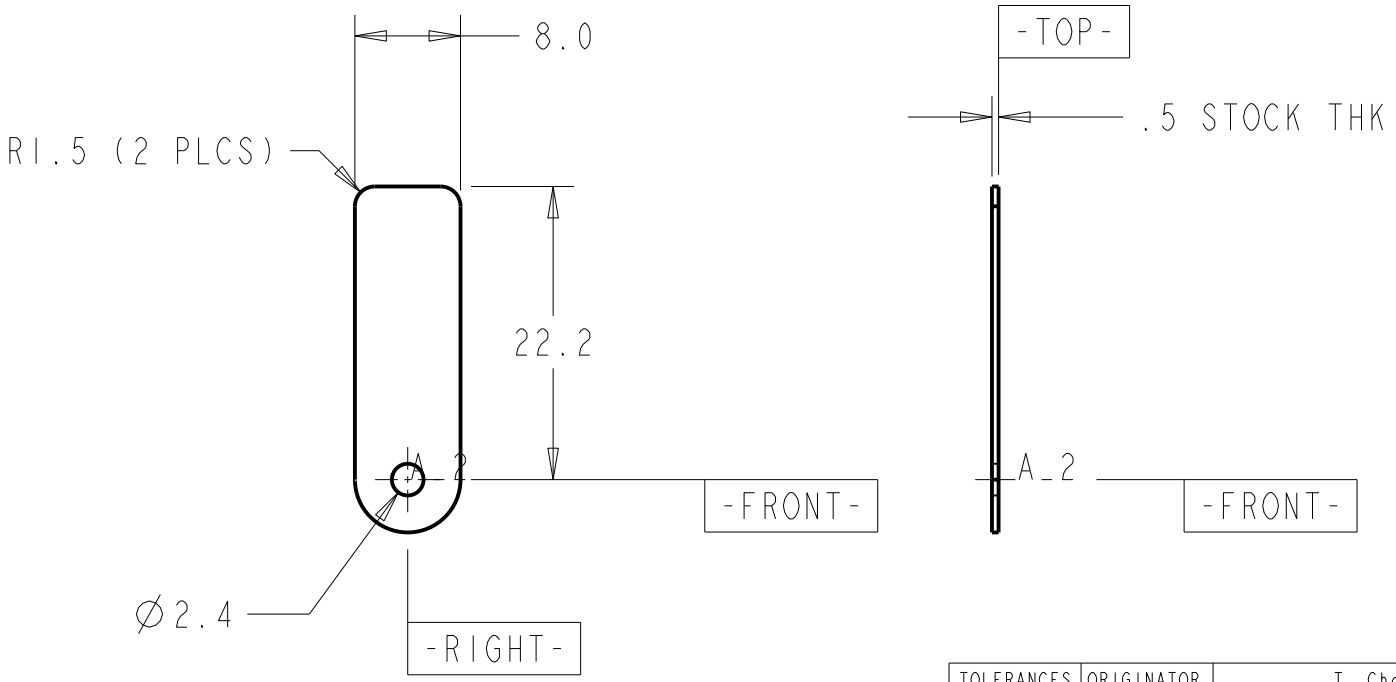

TOLERANCES		ORIGINATOR	T. Chase	19-May-10
.X	±0.1	DRAWN BY	T. Chase	19-May-10
.XX	±0.01	CHECKED		
.XXX	±0.001	APPROVED		
Angles	±0.5	USED ON: IPND Prototype Top Raceway		

NOvA Experiment (Fermilab E929)

UNIVERSITY OF MINNESOTA

Prototype Fiber Tab

Finish	Model Type: PART	Model File Name: FIBER_TAB	Drawing File Name: FIBER_TAB	
	Scale 2.000:1	Drawing Number	Revision	Sheet 1 of 1
	All dimensions are in mm unless specified otherwise			

NOTES	
1	MATERIAL: 0.5 MM (.020 INCH) THICK DELRIN STRIP, MCMASTER 1761T14 OR EQUIVALENT
2	QUANTITY: 225,000 (14 KT DETECTOR)