REV	DESCRIPTION	DRAWN / APPROVED	DATE / DATE
A	ADDED DIMENSIONS. DIM. 23.125 WAS 22.625, 23.250 WAS 22.750. ITEM 4 THK. FROM .75 TO 1.00.	VIC MAJDANSKI	13MAY2011
		E.VILLEGAS	13MAY2011
B	RELOCATED DATUM FEATURE. WELDING INFO MOVED FOR CLARITY. DIMENSIONS WERE .XXX	VIC MAJDANSKI	08JUN2011
		E.VILLEGAS	08JUN2011
C	DIM. (0.1085*) WAS (0.105*) ADDED HOLES (4 X ø.375 THRU).	J.CATALANELLO	12-DEC-2011
		D.FRIEND	15-DEC-2011
D	ADDED WELD IN DETAIL A. ADDED 3.75 HOLE LOCATION. REVISED WALL THICKNESS OF ITEM 1 TO 5/16.	B.CYKO	19-MAR-2012
		E.VILLEGAS	21MAR2012
E	WAS 3210LBS, ITEM 4 WAS 1.00 THK, FOUR .375 SLOT WAS HOLE	J.RAUCH	15-JUN-2012
		E.VILLEGAS	15-JUN-2012
E2	WELD WAS 1/2|L2-6, 23.625 WAS 23.125, 23.750 WAS 23.250	J.RAUCH	15-JUN-2012
		E.VILLEGAS	15-JUN-2012

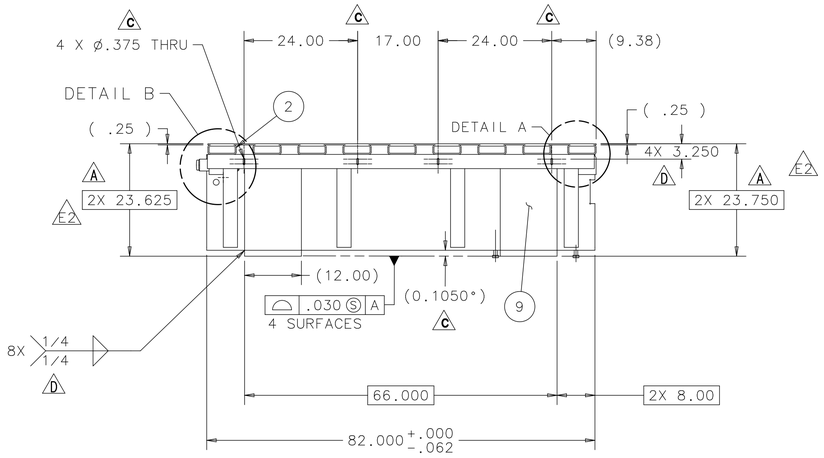

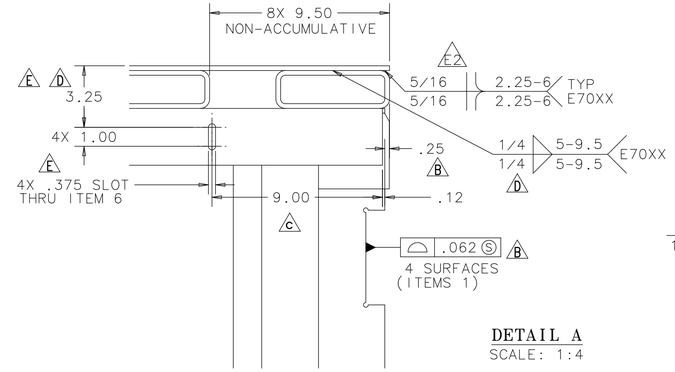

DETAIL A
SCALE: 1:4

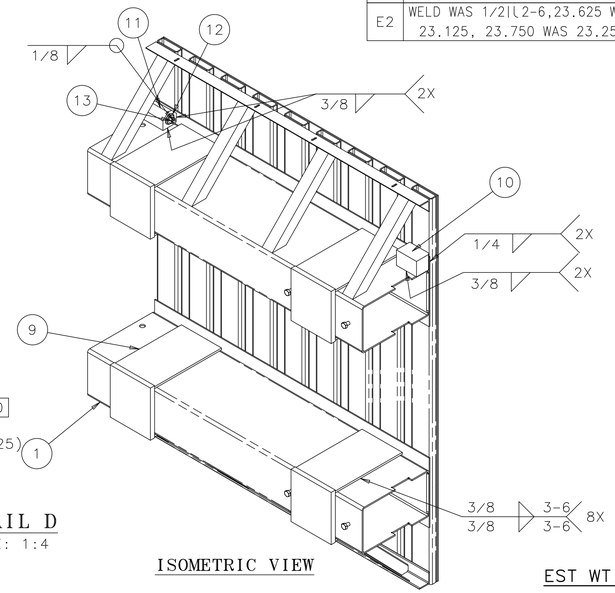

ISOMETRIC VIEW

EST WT.=3300 LBS

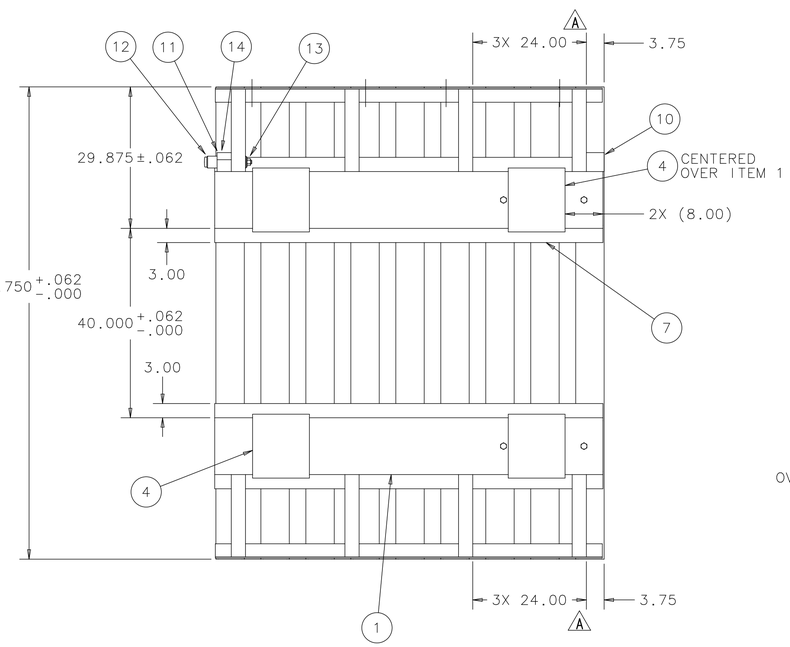

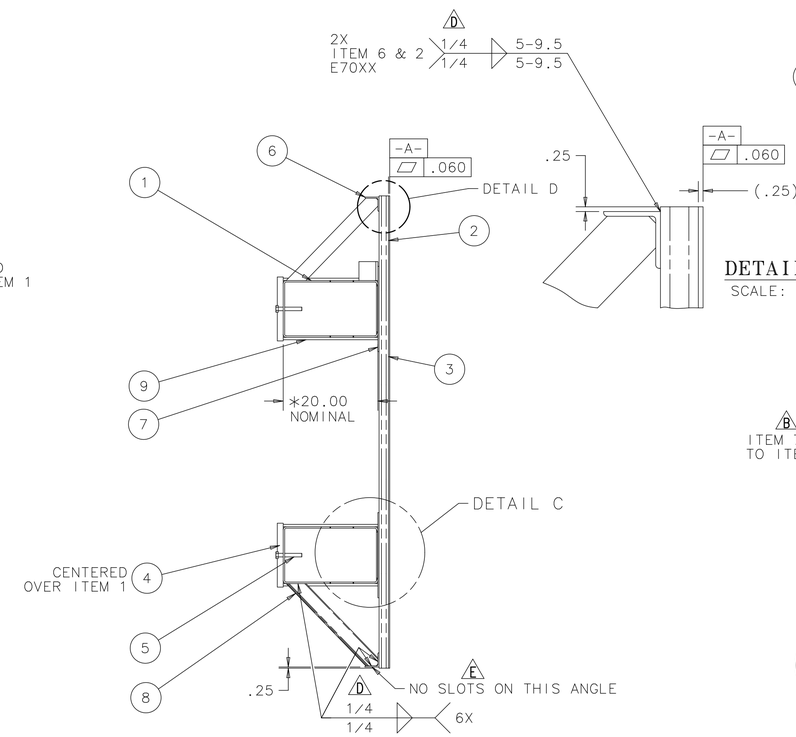

DETAIL D
SCALE: 1:4

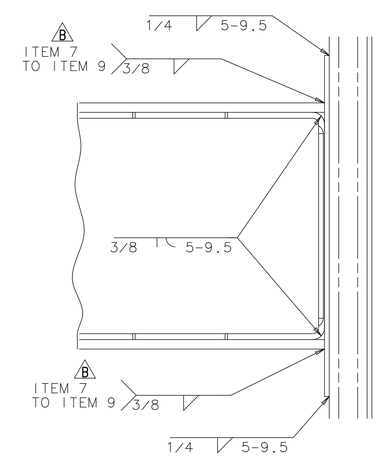

DETAIL C
SCALE: 1:4

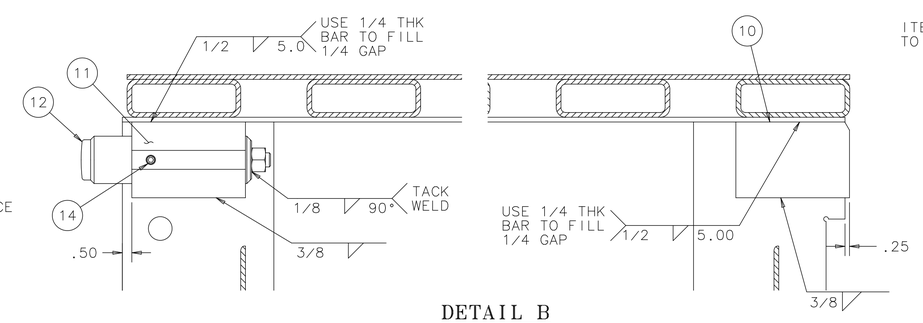

DETAIL B
SCALE: 1:4

ITEM	PART NO.	DESCRIPTION OR SIZE	QTY.
14	COML	SET SCREW, CUP POINT, 1/2-13 X .500 LG., STEEL, SELF LOCKING, McMASTER-CARR P/N 91385A707	1
13	MB-489015	HEX NUT 750-10 MODIFIED	1
12	MB-489014	ACME SCREW 2-500-4	1
11	MC-489013	ACME THRD 2-500-4 SPL-WLD NUT	1
10	MC-489016	PALLET SOLID STOP	1
9	COML	PLATE, 12.00 X 19.94 +.00/-.06 X .50 THK. ASTM A 36 STL.	8
8	MB-489066	ANGLE, MOD 3 X 3 X 1/4 X 26.00 LG	8
7	COML	PLATE, 18.00 X 82.00 X 1/4 THK. ASTM A 36 STL.	2
6	COML	ANGLE, 3 X 3 X 1/4 THK. 81.75 LG ASTM A 36 STL.	2
5	COML	SCREW, HX HD. 3/4-10 UNC X 5.00 LG. ZINC COATED STL, FULLY THREADED	4
E 4	COML	PLATE, 12.00 X 13.50 X 1.50 THK. ASTM A 36 STL. A	4
3	COML	PLATE, 99.75 X 82.00 X .25 THK. ASTM A 36 STL.	1
2	COML	TUBE, 6.00 X 2.00 X .25 WALL X 99.75 LG. ASTM A 500 GR B STL.	9
D 1	MC-486966	TUBING STRUCTURAL 20X12X5/16X82.00	2

PARTS LIST

UNLESS OTHERWISE SPECIFIED	ORIGINATOR	E.VILLEGAS	01-FEB-2011
.XX .XXX ANGLES	DRAWN	W.CYKO	01-FEB-2011
± .03 ± .015 ± ---	CHECKED	J.RAUCH	04-MAY-2011
	APPROVED	E.VILLEGAS	04-MAY-2011

1. BREAK ALL SHARP EDGES .015 MAX.
2. DO NOT SCALE DRAWING.
3. DIMENSIONS BASED UPON ASME Y14.5M-1994
4. MAX. ALL MACH. SURFACES 250
5. DRAWING UNITS: U.S. INCH

USED ON: ME-486927

MATERIAL: SEE PARTS LIST ABOVE

FERMI NATIONAL ACCELERATOR LABORATORY
UNITED STATES DEPARTMENT OF ENERGY

NOVA-EQUIPMENT HANDLING AR TABLE PIVOT MODULE AR PALLET-PIVOT

SCALE	DRAWING NUMBER	SHEET	REV
1:16 & AS NOTED	3929.220-MD-486995	1 OF 1	E

CREATED WITH : Ideas12NXSeries GROUP: PPD/MECHANICAL DEPARTMENT

NOTES:

1. ALL WELDS TO BE E70XX OR EQUIVALENT.
2. ALL WELDING SHALL BE IN ACCORDANCE WITH ANSI/AWS D1.1, "STRUCTURAL WELDING CODE - STEEL"
3. ALL WELDS SHALL BE MADE IN A SEQUENCE THAT WILL BALANCE THE APPLIED WELDING HEAT WHILE THE WELDING PROGRESSES. THE PROCEDURE AND SEQUENCE SHALL BE DESIGNED TO MINIMIZE DISTORTION AND SHRINKAGE STRESSES.
4. ALL WELDS SHALL BE VISUALLY INSPECTED AND DYE PENETRANT INSPECTED TO DETECT SURFACE AND SUBSURFACE CRACKS AND DISCONTINUITES IN ACCORDANCE WITH ANSI/AWS D1.1, "STRUCTURAL WELDING CODE - STEEL".
5. ALL WELDS THAT FAIL AN INSPECTION SHALL BE REPAIRED IN ACCORDANCE WITH ANSI/AWS D1.1, "STRUCTURAL WELDING CODE - STEEL".
6. PAINT WITH PRIMER, DAMP PROOF RUST-OLEUM NO 769.