REV	DESCRIPTION	DRAWN / APPROVED	DATE / DATE
B	1.UPDATO FORK ASSYS (ITEMS #5 & 6) 2.ADDED 1.00 AND FIELD NOTE DIM 3.DIM 82.50 WAS 83.50	D.FRIEND E.VILLEGAS	11-JUL-2012 09-AUG-2012
A	REVISED ITEMS #1, 3, 4 & 7; ADDED ITEM #13 & 14, PINS	PAT POLL E.VILLEGAS	30-MAY-2011 27-JUN-2011

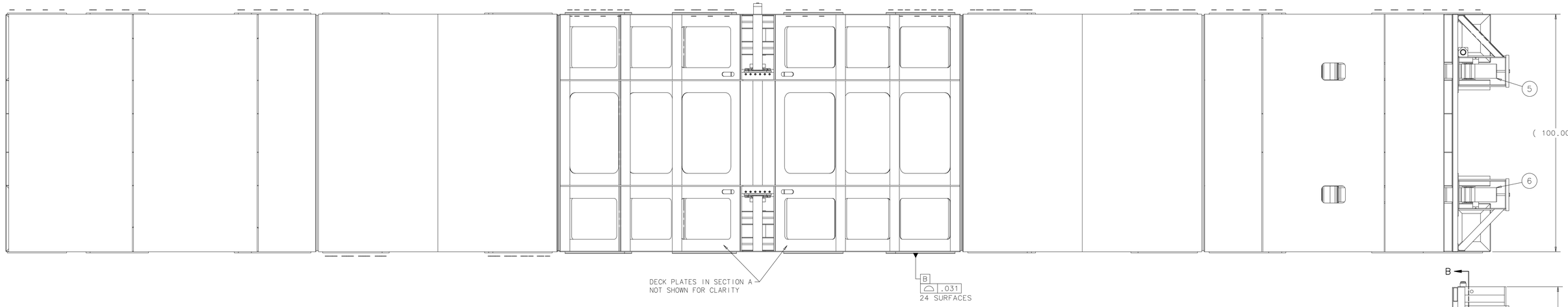

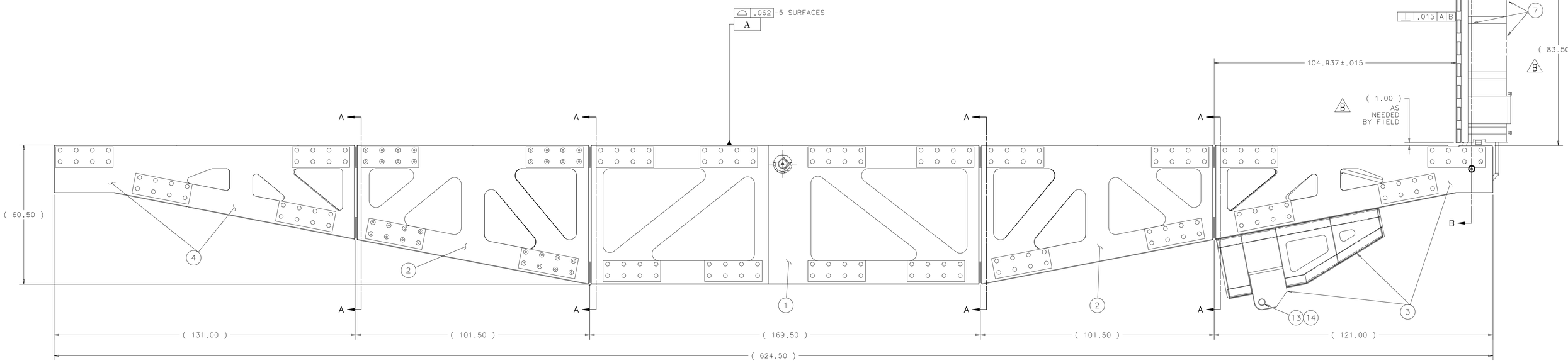

EST. WEIGHT = 37,125 LBS.

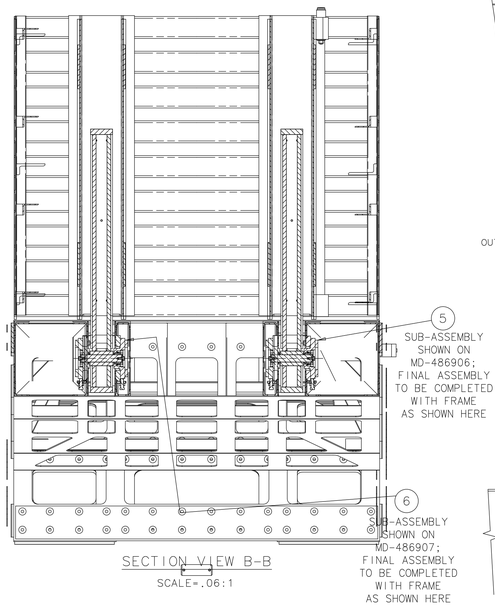

SECTION VIEW B-B
SCALE=.06:1

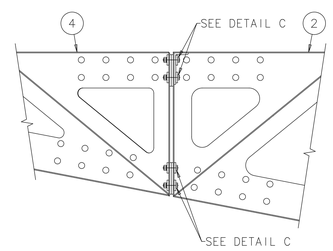

DETAIL OF BOLTS - SECT. B-D
OUTER FRONT & REINFORCING PLATES NOT SHOWN FOR CLARITY

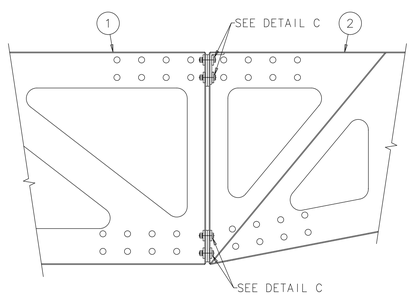

DETAIL OF BOLTS - SECT. A-B
TYPICAL FOR BOTH ENDS
OUTER FRONT & REINFORCING PLATES NOT SHOWN FOR CLARITY

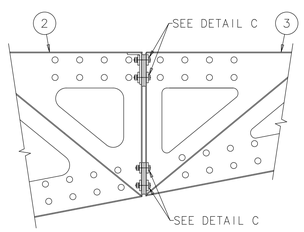

DETAIL OF BOLTS - SECT. B-C
OUTER FRONT & REINFORCING PLATES NOT SHOWN FOR CLARITY

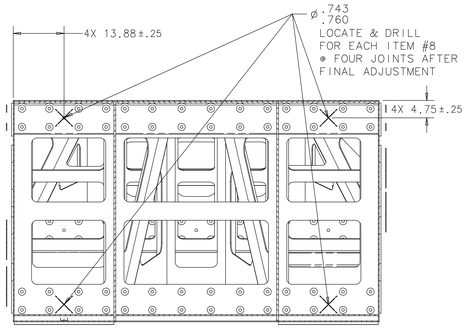

SECTION A-A
TYP. - 4 LOCATIONS

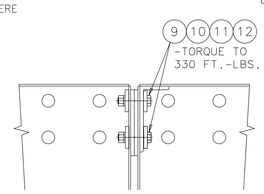

DETAIL C - FASTENERS
TYPICAL AT EACH JOINT
AS SHOWN IN DETAILS

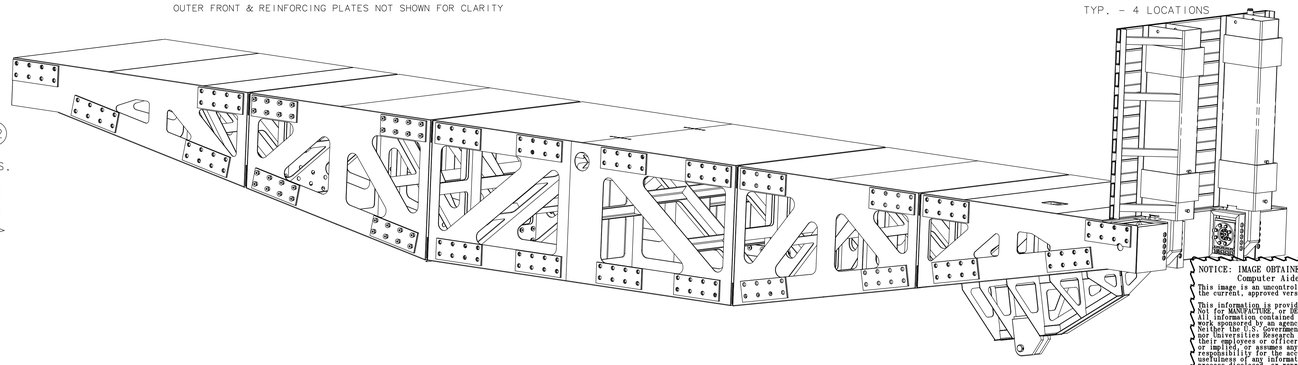

ITEM	PART NO.	DESCRIPTION OR SIZE	QTY.
14	COML	COTTER PIN, ø5/16" x 5.00" LG.	2
13	MC-486988	PIN, ø3.0x8.50 LG.,CYLIND.ROD END	1
12	COML	HEX NUT, #3/4-10 UNC, GRADE 8	224
11	COML	WASHER, SPECIAL, #3/4 SCREW SIZE x 3.00 OD x .500 THK.	448
10	COML	WASHER, LOCK, 3/4 SCREW SIZE, SST	224
9	COML	SCREW, HEX HD. CAP, #3/4-10 UNC x 4.00 LG., Gr.8	224
8	95755A880	SPRING PIN, ø.75 x 3.00 LG., HEAVY DUTY, STEEL, McMASTER-CARR	16
7	MD-486995	PALLET PIVOT SEGMENT	1
6	MD-486907	FORK ASSEMBLY, LEFT	1
5	MD-486906	FORK ASSEMBLY, RIGHT	1
4	ME-486941	SECTION D WELDMENT	1
3	ME-486921	PIVOT SECTION C WELDMENT	1
2	ME-486827	SECTION B WELDMENT	2
1	ME-489035	SECTION A PIVOT WELDMENT	1

PARTS LIST

UNLESS OTHERWISE SPECIFIED			ORIGINATOR	E.VILLEGAS	03-MAR-2011
.XX	.XXX	ANGLES	DRAWN	J.MATESKI	03-MAR-2011
± ---	± ---	± ---	CHECKED	J.RAUCH	03-MAY-2011
			APPROVED	E.VILLEGAS	03-MAY-2011

1. BREAK ALL SHARP EDGES .005 - .MAX.
2. DO NOT SCALE DRAWING.
3. DIMENSIONS BASED UPON ASME Y14.5M-1994
4. MAX. ALL MACH. SURFACES
5. DRAWING UNITS: U.S. INCH

USED ON: ME-486924

MATERIAL: SEE PARTS LIST ABOVE

FERMI NATIONAL ACCELERATOR LABORATORY
UNITED STATES DEPARTMENT OF ENERGY

NOVA-EQUIPMENT HANDLING SUPPORT EQUIPMENT AR TABLE PIVOT MODULE

SCALE	DRAWING NUMBER	SHEET	REV
1/2"=1"	3929.200-ME-486927	1 OF 1	B

CREATED WITH : Ideas12NXSeries | GROUP: PPD/MECHANICAL DEPARTMENT

NOTICE: IMAGE OBTAINED FROM FERMILAB
Computer Aided Design Group.
This image is an uncontrolled document and may not be the current, approved version.
This information is provided for REFERENCE use only. Not for MANUFACTURE, or DESIGN INFORMATION.
All information contained in this document represents work sponsored by an agency of the U.S. Government. Neither the U.S. Government nor any agency thereof, nor Universities Research Association, Inc., nor any of their employees or officers, makes any warranty, express or implied, or assumes any legal liability or responsibility for the accuracy, completeness, or usefulness of any information, apparatus, product or process disclosed, or represents that its use would not infringe privately owned rights.