| REV | DESCRIPTION | DRAWN | DATE |
|---|---|---|---|
| | | APPROVED | DATE |
| A | ADDED ITEMS 20 THRU 25 | J.RAUCH | 13-JUN-2012 |
| | ADDED NOTE 2 | E.VILLEGAS | 13-JUN-2012 |

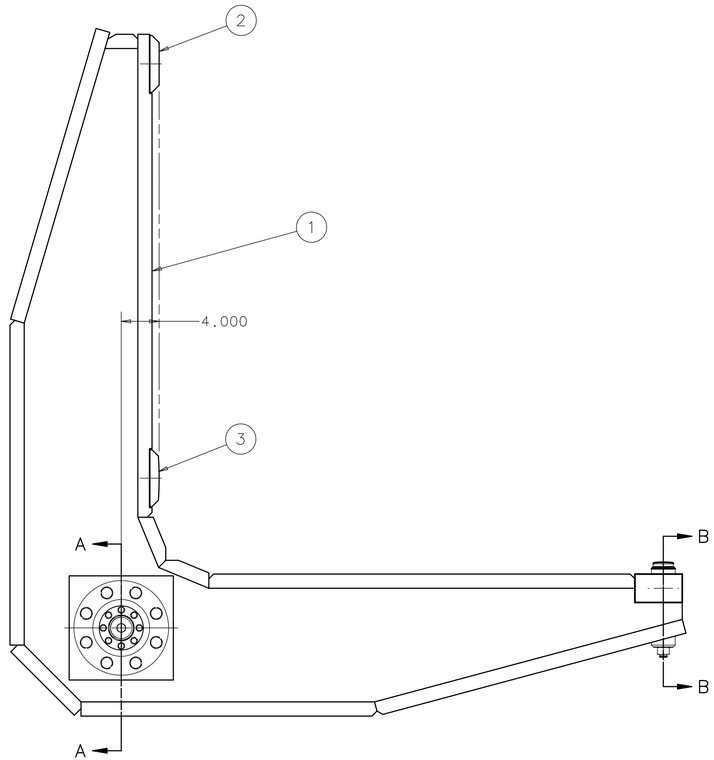


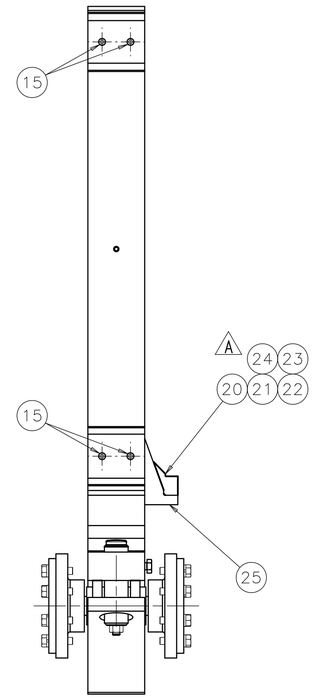


EST. WEIGHT: 1515 LBS.

| ITEM | PART NO. | DESCRIPTION OR SIZE | QTY. |
|---|---|---|---|
| 25 | COML | SCREW, SOC.HD.CAP, 308--16 UNC x 1.25 LG., GR. 5(NOT SHOWN) | 1 |
| 24 | MB-489750 | PALLET STOP EXTENSION-.75 | 1 |
| 23 | MB-489749 | PALLET STOP EXTENSION-2.00 | 1 |
| 22 | MB-489748 | PALLET STOP EXTENSION-1.75 | 1 |
| 21 | MB-489747 | PALLET STOP EXTENSION-1.50 | 1 |
| 20 | MB-489746 | PALLET STOP EXTENSION-1.25 | 1 |
| 19 | MB-489015 | HEX NUT, 3/4-10 MODIFIED | 1 |
| 18 | COML | WASHER, LOCK, 3/4 SCREW | 16 |
| 17 | COML | WASHER, LOCK, 1/2 SCREW | 2 |
| 16 | COML | WASHER, LOCK, 3/8 SCREW | 16 |
| 15 | COML | SCREW, SOC.HD.CAP, 1/2-13 UNC x 1.00 LG., GR. 5 | 4 |
| 14 | COML | SCREW, HEX HD., 3/4-10 UNC x 2.00 LG., BRASS | 1 |
| 13 | COML | SCREW, HEX HD., 3/4-10 UNC x 2.750 LG., GR. 8 | 16 |
| 12 | COML | SCREW, HEX HD., 1/2-13 UNC x 1.250 LG.,GR.8; FULLY THREADED | 2 |
| 11 | COML | SCREW, HEX HD., 3/8-16 UNC x 1.500 LG., GR. 8 | 16 |
| 10 | MB-489014 | ACME SCREW, #2 1/2-4 THD. | 1 |
| 9 | 20SF32 | BEARING, TIMKEN | 2 |
| 8 | MB-486852 | FORK SHAFT RETAINER | 2 |
| 7 | MB-486851 | FORK SHAFT | 1 |
| 6 | MC-486849 | FORK HOUSING CLAMP | 2 |
| 5 | MB-486840 | FORK BEARING HOUSING | 2 |
| 4 | MB-486835 | FORK BEARING CLAMP | 2 |
| 3 | MB-486831 | PALLET SPACER, ROUNDED | 1 |
| 2 | MB-486829 | PALLET SPACER, FLAT | 1 |
| 1 | MD-486869 | PALLET FORK LEFT WELDMENT | 1 |

PARTS LIST

NOTE

1. ASSEMBLE AS SHOWN FOR FIT; ASSEMBLY TO BE COMPLETED AT INSTALLATION IN TABLE PER DWG'S ME-489026 AND ME-489027.
2. WHICH ONE TO USE FOR ITEMS 20 THRU 24, WILL BE DETERMINED AT ASSEMBLY

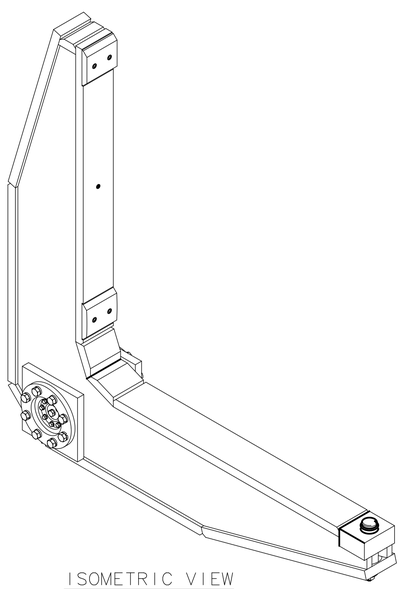

ISOMETRIC VIEW

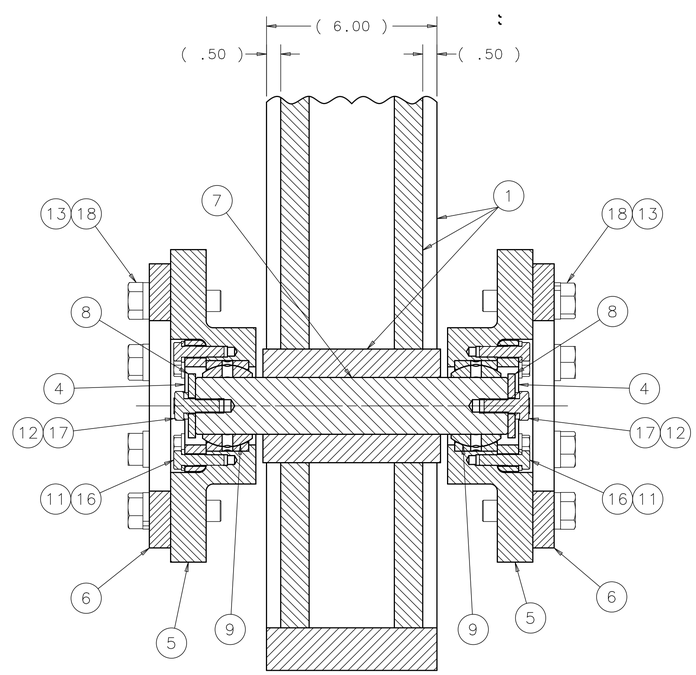


SECTION A-A

SCALE = NONE

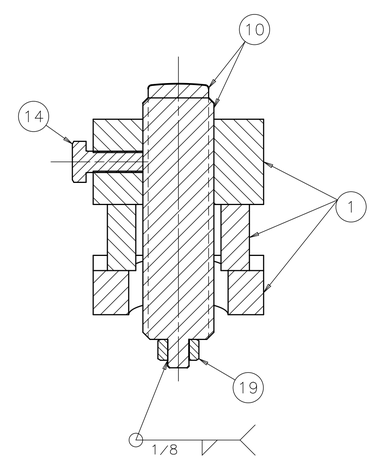


SECTION B-B

SCALE = NONE

NOTICE: IMAGE OBTAINED FROM FERMILAB
Computer Aided Design Group.
This image is an uncontrolled document and may not be the current, approved version.

This information is provided for REFERENCE use only. Not for MANUFACTURE, or DESIGN INFORMATION. All information contained in this document represents work sponsored by an agency of the U.S. Government. Neither the U.S. Government nor any agency thereof, nor Universities Research Association, Inc., nor any of their employees or officers, makes any warranty, express or implied, or assumes any legal liability or responsibility for the accuracy, completeness, or usefulness of any information, apparatus, product or process disclosed, or represents that its use would not infringe privately owned rights.

| UNLESS OTHERWISE SPECIFIED | | | ORIGINATOR | E.VILLEGAS | 21-DEC-2010 |
|---|---|---|---|---|---|
| .XX | .XXX | ANGLES | DRAWN | P.POLL | 23-FEB-2011 |
| ± .06 | ± .010 | ± 1° | CHECKED | J.RAUCH | 29-APR-2011 |
| | | | APPROVED | E.VILLEGAS | 29-APR-2011 |

1. BREAK ALL SHARP EDGES .015 MAX.
2. DO NOT SCALE DRAWING.
3. DIMENSIONS BASED UPON ASME Y14.5M-1994
4. MAX. ALL MACH. SURFACES 250
5. DRAWING UNITS: U.S. INCH

USED ON: ME-386926 & ME-486927

MATERIAL: SEE PARTS LIST ABOVE

FERMI NATIONAL ACCELERATOR LABORATORY
UNITED STATES DEPARTMENT OF ENERGY

# NOVA-EQUIPMENT HANDLING ASH RIVER ASSY TABLE PALLET FORK ASSY, LEFT

| SCALE | DRAWING NUMBER | SHEET | REV |
|---|---|---|---|
| 1:8 & NOTED | 9219.220-MD-486907 | 1 OF 1 | A |

CREATED WITH : Ideas12NXSeries | GROUP: PPD/MECHANICAL DEPARTMENT