REV	DESCRIPTION	DRAWN / APPROVED	DATE
A	REBALLOONED AS NECESSARY. ADDED ITEMS 68 THRU 72. CHANGED QTY. ON ITEMS 6, 14, 20, 23, 60 AND 61. MODIFIED NOTE #6.	J.MATESKI	23-JUN-2011
		E.VILLEGAS	24-JUN-2011
B	ADDED ITEMS 68-72 TO BOM ON SHEET 2	J.RAUCH	12-JUL-2011
		E.VILLEGAS	12-JUL-2011

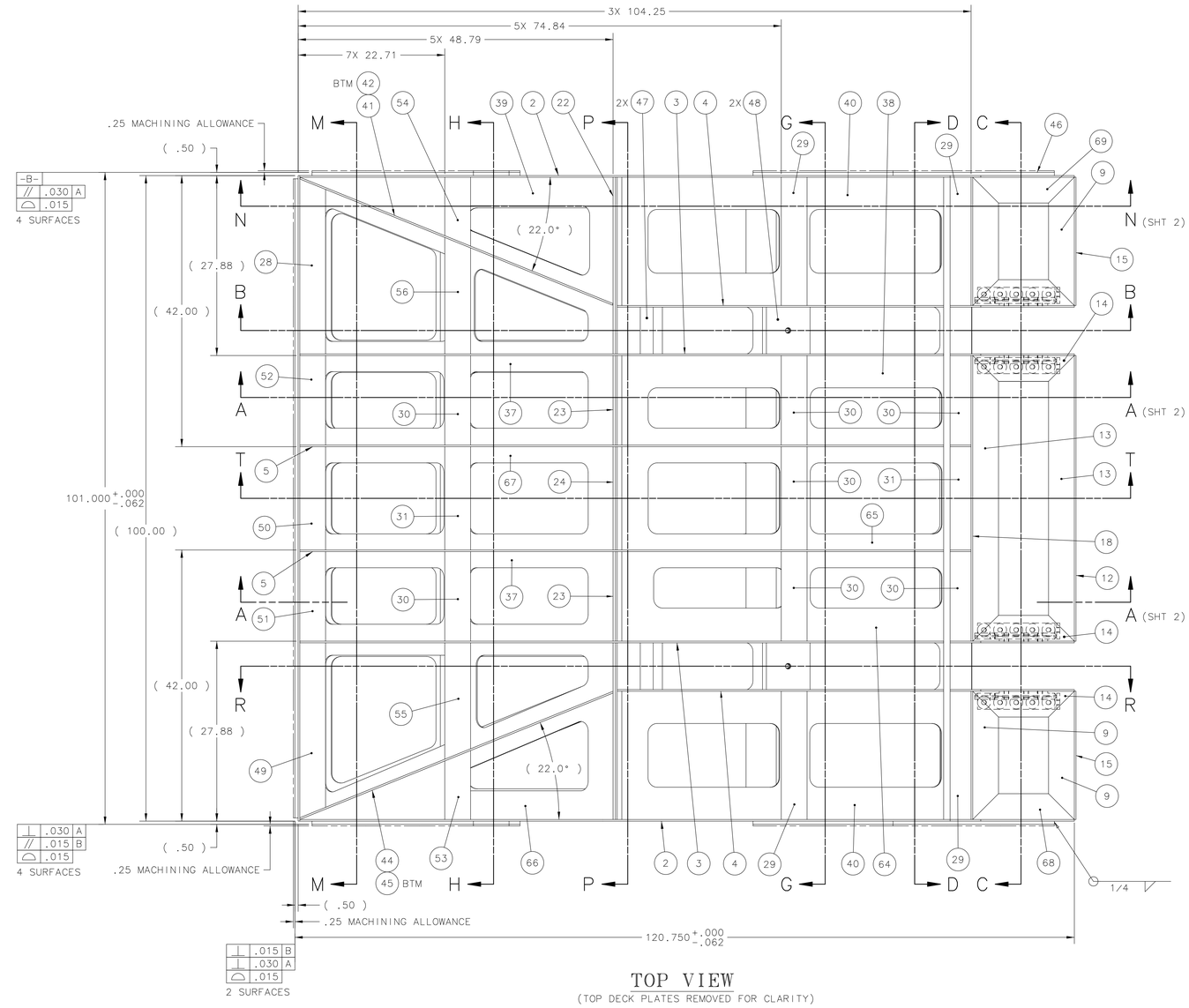

TOP VIEW
(TOP DECK PLATES REMOVED FOR CLARITY)

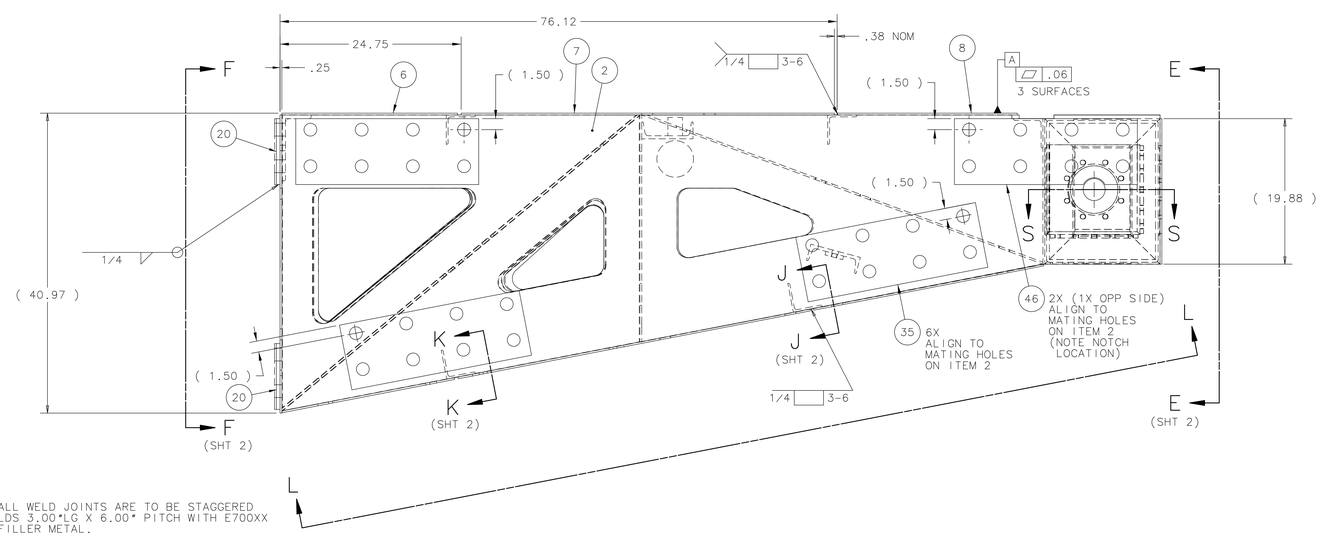

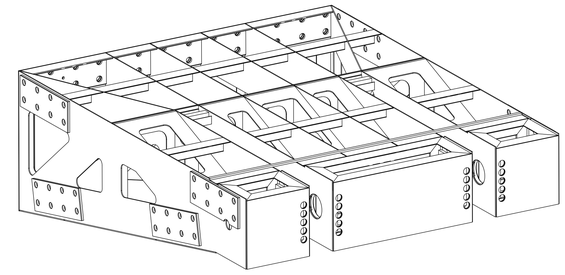

ISOMETRIC VIEW
(DECK PLATES REMOVED)
SCALE 1:16

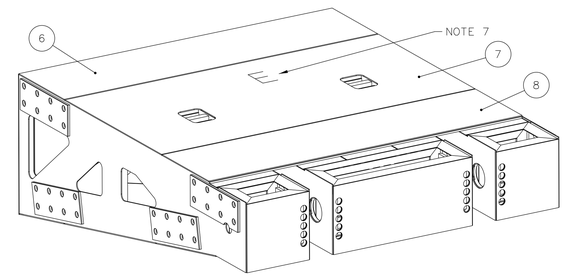

ISOMETRIC VIEW
SCALE 1:16

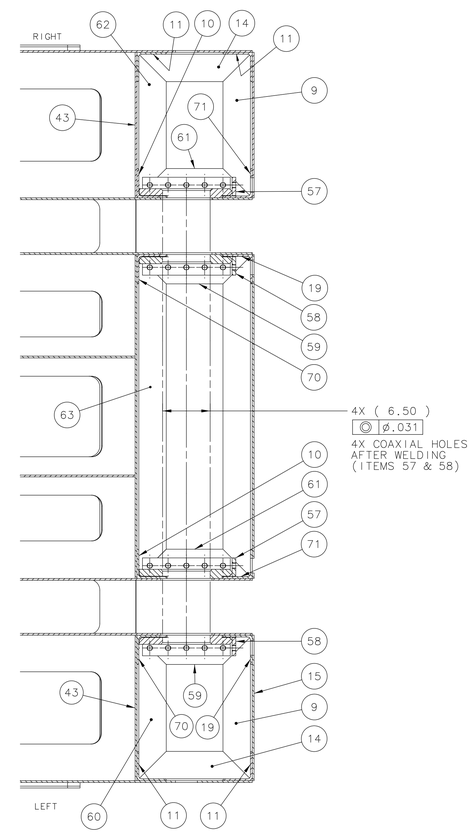

SECTION S-S

PARTS LIST CONTINUED ON SHEET 2

ITEM	PART NO.	DESCRIPTION OR SIZE	QTY.
58	MC-486873	LEFT SIDE ASSY A WLDNT	2
57	MC-486868	RIGHT SIDE ASSY B WLDNT	2
56	MC-486979	ANGLE 4X4X.25X18.04 RT CUT TOP	1
55	MC-486980	ANGLE 4X4X.25X18.04 LFT CUT TOP	1
54	MC-486981	ANGLE 4X4X.25X10.68 RT CUT TOP	1
53	MC-486982	ANGLE 4X4X.25X10.68 LFT CUT TOP	1
52	MC-486983	ANGLE 9X4X.50X13.88 R	1
51	MC-486984	ANGLE 9X4X.50X13.88 L	1
50	MB-486700	ANGLE 9X4X.50X16	1
49	MC-486530	ANGLE 9X4X.50X27.11 LFT CUT	1
48	MC-486969	PALLET STOP WELDMENT	2
47	MC-486972	ACME SCREW ANCHOR WELDMENT	2
46	MC-486996	FLAT PLATE NOTCHED .75X9X25	2
45	MC-487537	AR SECTION C LONGL E PLATE	1
44	MC-486536	AR SECTION C LONGL D PLATE	1
43	MB-486762	AR SECTION C TRANSV G PLATE	2
42	MC-486594	AR SECTION C LONGL G PLATE	1
41	MC-486576	AR SECTION C LONGL F PLATE	1
40	MC-486719	AR SECTION C DIAG A PLATE	2
39	MC-486720	AR SECTION C DIAG E PLATE	1
38	MC-486895	AR SECTION C DIAG B PLATE	1
37	MC-486723	AR SECTION C DIAG G PLATE	2
36	MC-486520	ANGLE 4X4X.25X18.17 RT CUT	1
35	MC-486506	FLAT PLATE .75X9X25	6
34	MC-486519	ANGLE 4X4X.25X18.42 LFT CUT	1
33	MC-486514	ANGLE 4X4X.25X10.68 RT CUT	1
32	MC-486513	ANGLE 4X4X.25X10.68 LFT CUT	1
31	MC-486518	ANGLE 4X4X.25X16	5
30	MB-489060	ANGLE 4X4X.25X13.88	10
29	MB-486755	ANGLE 4X4X.25X19.88	6
28	MC-486533	ANGLE 9X4X.50X27.11 RT CUT	1
27	MC-486502	BOTTOM PLATE .25X32X100	1
26	MC-486503	BOTTOM PLATE .25X49X100	1
25	MC-486501	BOTTOM PLATE .25X24X100	1
24	MC-486491	AR SECTION D TRANSV B PLATE	1
23	MB-486715	AR SECTION C TRANSV C PLATE	2
22	MB-486716	AR SECTION C TRANSV D PLATE	2
21	MC-486489	AR SECTION D TRANSV A PLATE	1
20	MC-486507	FLAT PLATE .75X9X99	2
19	MB-486632	ANGLE 4X4X.25X19.88 45 CUT FRNT	2
18	MB-486770	AR SECTION C TRANSV H PLATE	1
17	-	-	-
16	-	-	-
15	MB-486718	AR SECTION C TRANSV G PLATE RT	2
14	MB-486617	ANGLE 4X4X.25X15.75 45 DBL CUT	6
13	MC-486976	ANGLE 4X4X.25X44.25 45 CUT	3
12	MC-486978	AR SECT C TRANSV H PLATE FRNT	1
11	MB-486635	ANGLE 4X4X.25X19.88 45 DBL CUT	4
10	MB-486619	ANGLE 4X4X.25X19.88 45 CUT CL	2
9	MB-486618	ANGLE 4X4X.25X19.88 45 DBL CUT	6
8	MC-486774	DECK PLATE .25X24.62X100	1
7	MC-486914	DECK PLATE .25X51X100	1
6	MC-486504	DECK PLATE .25X24X100	1
5	MC-486534	AR SECTION C LONGL B PLATE	2
4	MC-486591	AR SECTION C LONGL H PLATE	2
3	MC-486535	AR SECTION C LONGL C PLATE	2
2	MD-486522	AR SECTION C LONGL A PLATE	2
1	- -	- -	-

PARTS LIST

NOTES:

1. UNLESS NOTED, ALL WELD JOINTS ARE TO BE STAGGERED 1±4" FILLET WELDS 3.00"LG X 6.00" PITCH WITH E70XX OR EQUIVALENT FILLER METAL.
2. ALL WELDING SHALL BE IN ACCORDANCE WITH ANSI/AWS D1.1, "STRUCTURAL WELDING CODE - STEEL"
3. ALL WELDS SHALL BE MADE IN A SEQUENCE THAT WILL BALANCE THE APPLIED WELDING HEAT WHILE THE WELDING PROGRESSES. THE PROCEDURE AND SEQUENCE SHALL BE DESIGNED TO MINIMIZE DISTORTION AND SHRINKAGE STRESSES.
4. ALL WELDS SHALL BE VISUALLY INSPECTED AND DYE PENETRANT INSPECTED TO DETECT SURFACE AND SUBSURFACE± CRACKS AND DISCONTINUITIES IN ACCORDANCE WITH ANSI/AWS D1.1, "STRUCTURAL WELDING CODE - STEEL".
5. ALL WELDS THAT FAIL AN INSPECTION SHALL BE REPAIRED IN ACCORDANCE WITH ANSI/AWS D1.1, "STRUCTURAL WELDING CODE - STEEL".
6. PAINT WITH PRIMER, DAMP-PROOF RUST-OLEUM OR SHOP PRIMER.
7. ITEMS WITH "E" STAMP, NOTE THE POSITION TO AID CORRECT POSITIONING.

UNLESS OTHERWISE SPECIFIED				
.XX	.XXX	ANGLES	ORIGINATOR	E.VILLEGAS	21-DEC-2010
± .03	± - -	± 1°	DRAWN	T.SPERRY	24-MAR-2011
			CHECKED	J.RAUCH	29-APR-2011
			APPROVED	E.VILLEGAS	29-APR-2011

1. BREAK ALL SHARP EDGES MAX
2. DO NOT SCALE DRAWING.
3. DIMENSIONS BASED UPON ASME Y14.5M-1994
4. MAX. ALL MACH. SURFACES 250
5. DRAWING UNITS: U.S. INCH

USED ON: ME-486926

MATERIAL: SEE PARTS LIST ABOVE

FERMI NATIONAL ACCELERATOR LABORATORY
UNITED STATES DEPARTMENT OF ENERGY

NOVA-EQUIPMENT HANDLING ASH RIVER ASSY TABLE AR SECTION C WELDMENT

SCALE	DRAWING NUMBER	SHEET	REV
1:8 & AS NOTED	3929.220-ME-486989	1 OF 1	B

CREATED WITH : Ideas12NXSeries | GROUP: PPD/MECHANICAL DEPARTMENT

NOTICE: IMAGE OBTAINED FROM FERMILAB WEB SITE

This information is provided for REFERENCE use only. Not for MANUFACTURE, or DESIGN INFORMATION. All information contained in this document represents work sponsored by an agency of the U.S. Government. Neither the U.S. Government nor any agency thereof, nor Universities Research Association, Inc., nor any of their employees or officers, makes any warranty, express or implied, or assumes any legal liability or responsibility for the accuracy, completeness, or usefulness of any information, apparatus, product or process disclosed, or represents that its use would not infringe privately owned rights.

REV	DESCRIPTION	DRAWN	DATE
		APPROVED	DATE

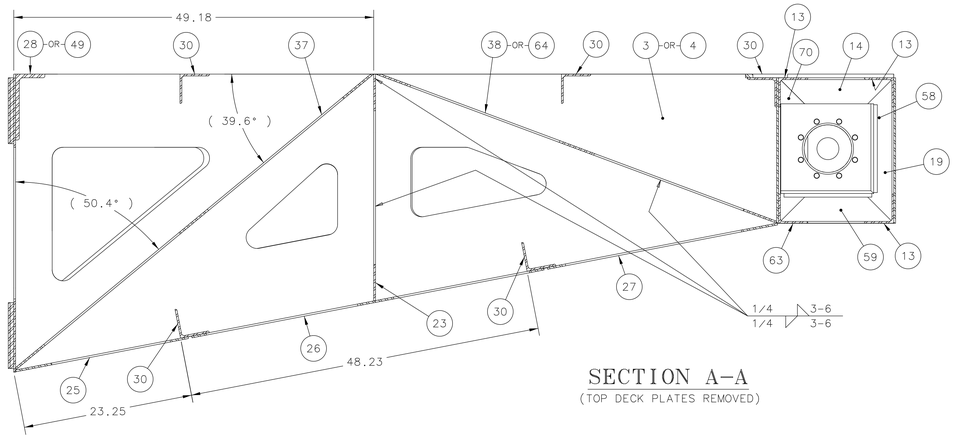

SECTION A-A
(TOP DECK PLATES REMOVED)

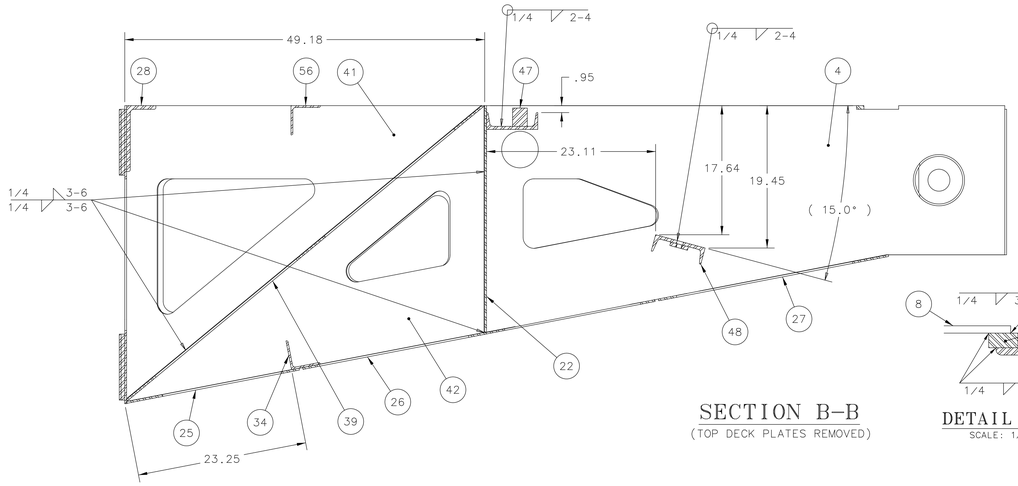

SECTION B-B
(TOP DECK PLATES REMOVED)

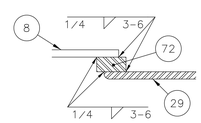

DETAIL "U"
SCALE: 1/2

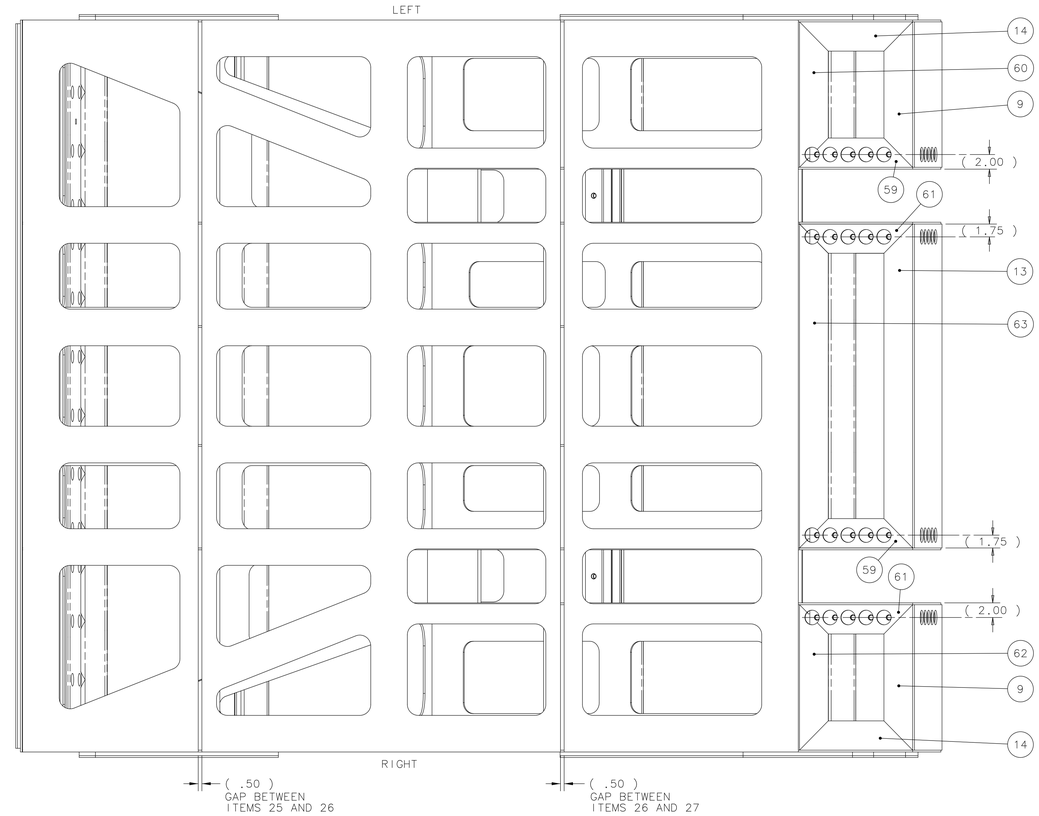

VIEW L-L
(ROTATED 10.91° CW)

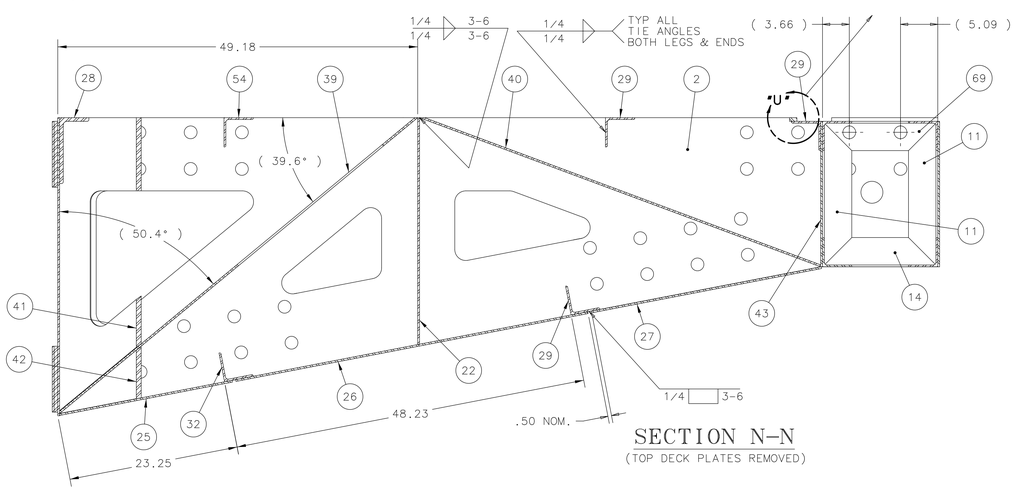

SECTION N-N
(TOP DECK PLATES REMOVED)

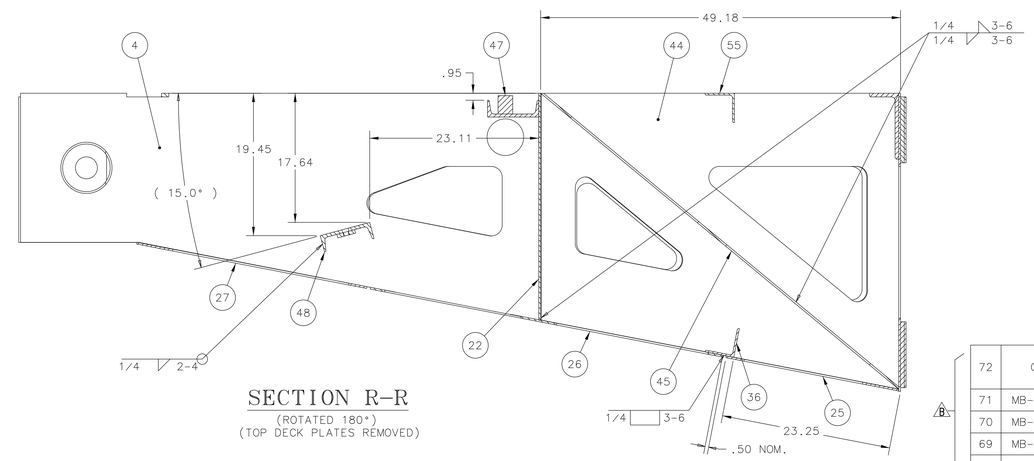

SECTION R-R
(ROTATED 180°)
(TOP DECK PLATES REMOVED)

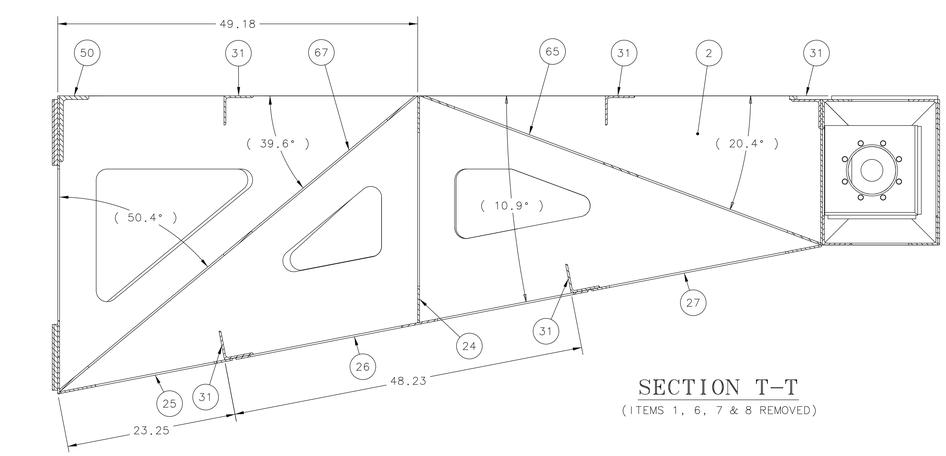

SECTION T-T
(ITEMS 1, 6, 7 & 8 REMOVED)

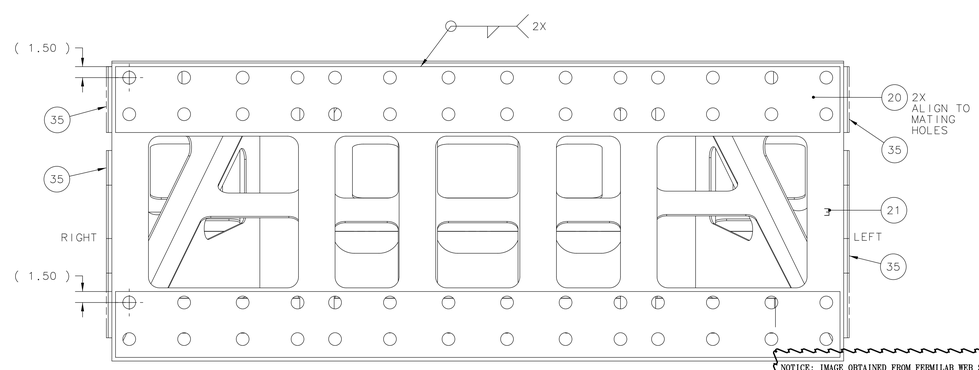

VIEW F-F

ITEM	PART NO.	DESCRIPTION OR SIZE	QTY.
72	COML	BAR, .50 THK. X 1.00 W. X 99.50 LG., ASTM A36 STL.	1
71	MB-489177	ANGLE 4X4X.25X19.88 45 CUTFRNT-RH	2
70	MB-489176	ANGLE 4X4X.25X19.88 45 CUT CL LH	2
69	MB-489175	ANGLE 4X4X.25X15.75 45 CUT-HOLES-RH	1
68	MB-489174	ANGLE 4X4X.25X15.75 45 CUT-HOLES-LH	1
67	MC-486903	AR SECTION C DIAG H PLATE	1
66	MC-486721	AR SECTION C DIAG F PLATE	1
65	MC-486899	AR SECTION C DIAG D PLATE	1
64	MC-486898	AR SECTION C DIAG C PLATE	1
63	MC-489041	ANGLE 4X4X.25X44.25 END HOLES	1
62	MB-489022	ANGLE 4X4X.25X19.88 1 HOLE RT	1
61	MB-489019	ANGLE 4X4X.25X15.75 4 HOLE RT	2
60	MB-489021	ANGLE 4X4X.25X19.88 1 HOLE LEFT	1
59	MB-489018	ANGLE 4X4X.25X15.75 4 HOLE LEFT	2

PARTS LIST

UNLESS OTHERWISE SPECIFIED			ORIGINATOR	E.VILLEGAS	21-DEC-2010
.XX	.XXX	ANGLES	DRAWN	T.SPERRY	24-MAR-2011
± .03	± - -	± 1°	CHECKED	J.RAUCH	29-APR-2011
1. BREAK ALL SHARP EDGES MAX.			APPROVED	E.VILLEGAS	29-APR-2011
2. DO NOT SCALE DRAWING. 3. DIMENSIONS BASED UPON ASME Y14.5M-1994 4. MAX. ALL MACH. SURFACES 250 √ 5. DRAWING UNITS: U.S.INCH			USED ON	ME-486926	
			MATERIAL	SEE PARTS LIST ABOVE	

FERMI NATIONAL ACCELERATOR LABORATORY
UNITED STATES DEPARTMENT OF ENERGY

NOVA-EQUIPMENT HANDLING
ASH RIVER ASSY TABLE
AR SECTION C WELDMENT

SCALE	DRAWING NUMBER	SHEET	REV
1:8 & AS NOTED	3929.220-ME-486989	2 OF 1	B

CREATED WITH : Ideas12NXSeries GROUP: PPD/MECHANICAL DEPARTMENT

NOTICE: IMAGE OBTAINED FROM FERMILAB WEB SITE
This information is provided for REFERENCE use only.
Not for MANFACTURE, or DESIGN INFORMATION.
All information contained in this document represents work sponsored by an agency of the U.S. Government.
Neither the U.S. Government nor any agency thereof, nor Universities Research Association, Inc., nor any of their employees or officers, makes any warranty, express or implied, or assumes any legal liability or responsibility for the accuracy, completeness, or usefulness of any information, apparatus, product or process disclosed, or represents that its use would not infringe privately owned rights.

REV	DESCRIPTION	DRAWN	DATE
		APPROVED	DATE

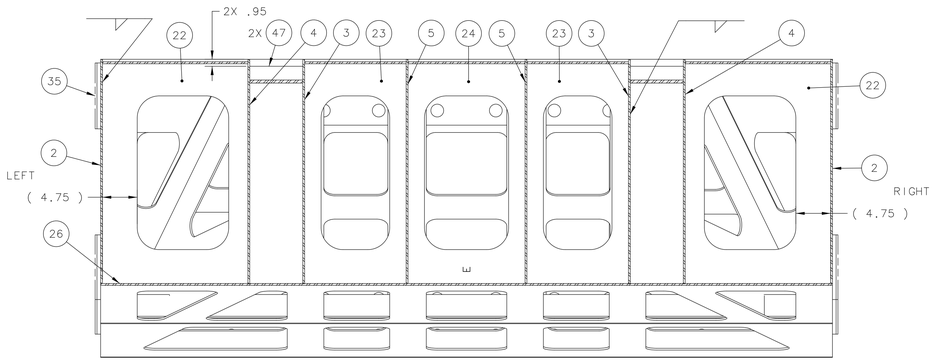

SECTION P-P

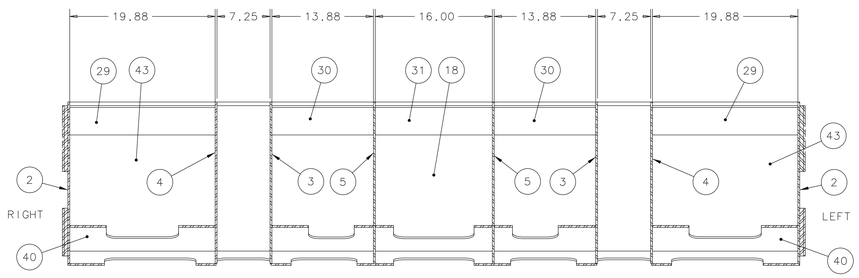

SECTION D-D

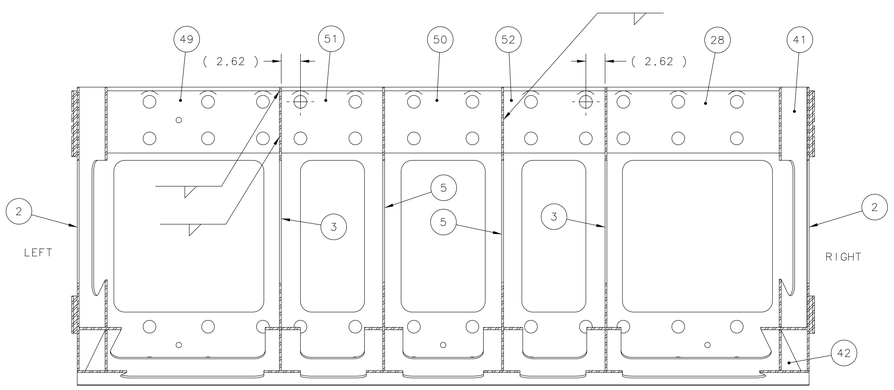

SECTION M-M

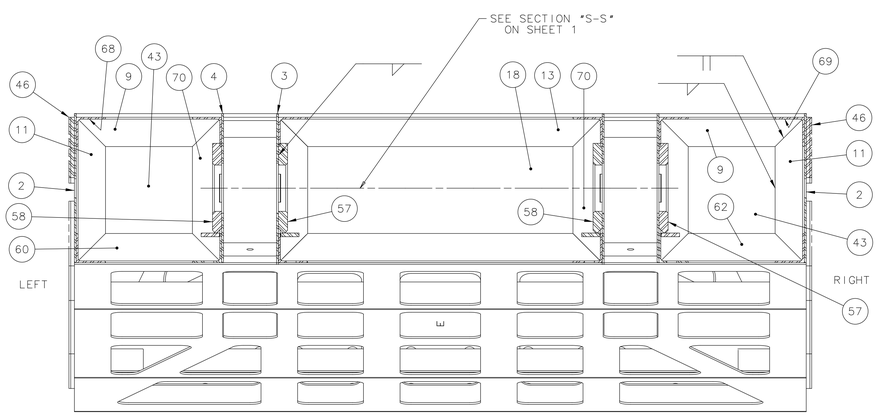

SECTION C-C

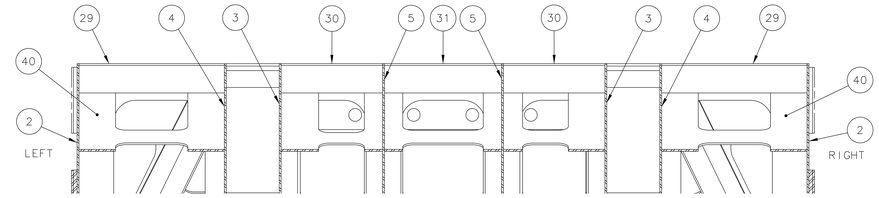

SECTION G-G

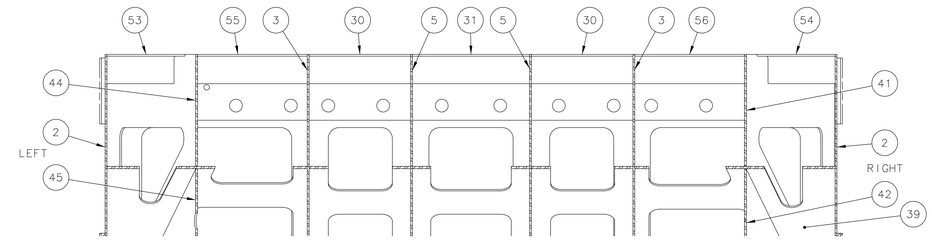

SECTION H-H

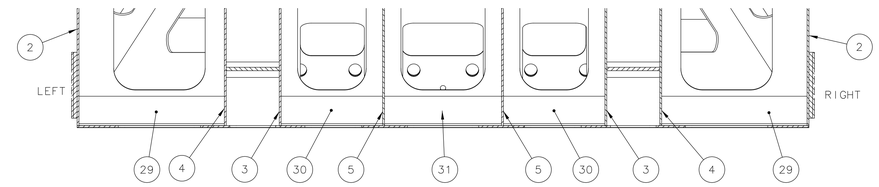

SECTION J-J

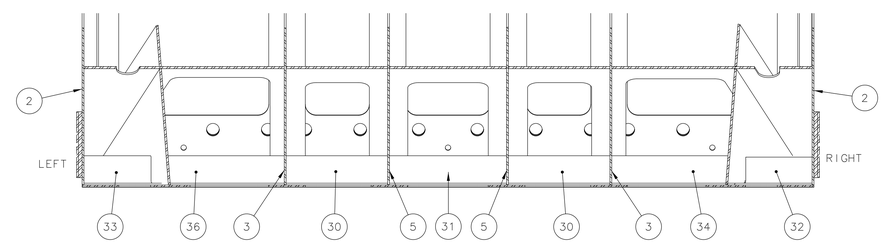

SECTION K-K

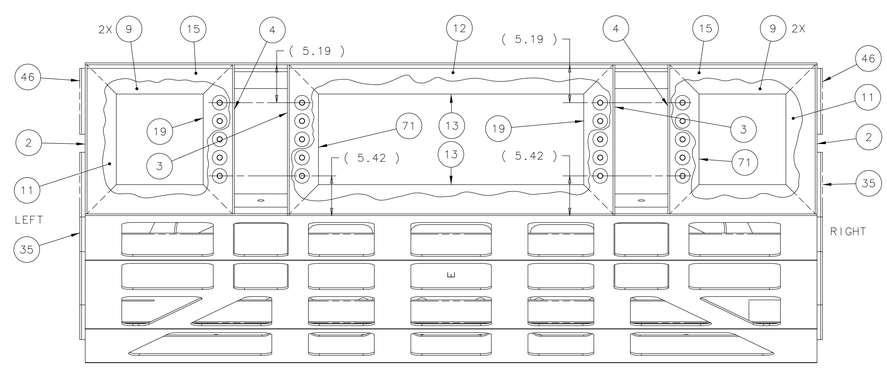

VIEW E-E

UNLESS OTHERWISE SPECIFIED			ORIGINATOR	E.VILLEGAS	21-DEC-2010
.XX	.XXX	ANGLES	DRAWN	T.SPERRY	24-MAR-2011
± .03	± - -	± 1°	CHECKED	J.RAUCH	29-APR-2011
1. BREAK ALL SHARP EDGES MAX. 2. DO NOT SCALE DRAWING. 3. DIMENSIONS BASED UPON ASME Y14.5M-1994. 4. MAX. ALL MACH. SURFACES 250 √ 5. DRAWING UNITS: U.S.INCH			APPROVED	E.VILLEGAS	29-APR-2011
			USED ON	ME-486926	
			MATERIAL	SEE PARTS LIST ABOVE	

FERMI NATIONAL ACCELERATOR LABORATORY
UNITED STATES DEPARTMENT OF ENERGY

NOVA-EQUIPMENT HANDLING ASH RIVER ASSY TABLE AR SECTION C WELDMENT

SCALE	DRAWING NUMBER	SHEET	REV
1:8 & AS NOTED	3929.220-ME-486989	3 OF 1	B

CREATED WITH : Ideas12NXSeries GROUP: PPD/MECHANICAL DEPARTMENT

NOTICE: IMAGE OBTAINED FROM FERMILAB WEB SITE
This information is provided for REFERENCE use only.
Not for MANUFACTURE, or DESIGN INFORMATION.
All information contained in this document represents work sponsored by an agency of the U.S. Government.
Neither the U.S. Government nor any agency thereof, nor Universities Research Association, Inc., nor any of their employees or officers, makes any warranty, express or implied, or assumes any legal liability or responsibility for the accuracy, completeness, or usefulness of any information, apparatus, product or process disclosed, or represents that its use would not infringe privately owned rights.