REV	DESCRIPTION	DRAWN	DATE
		APPROVED	DATE

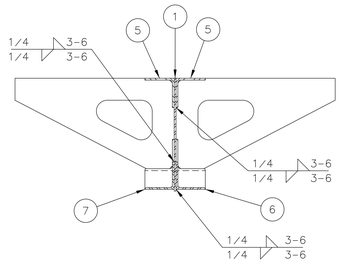

SECTION C-C

STAGGER WELDS ABOVE ARE TYPICAL FOR HORIZONTAL WELDING OF ITEM 1 TO ITEMS 5, 6 AND 7

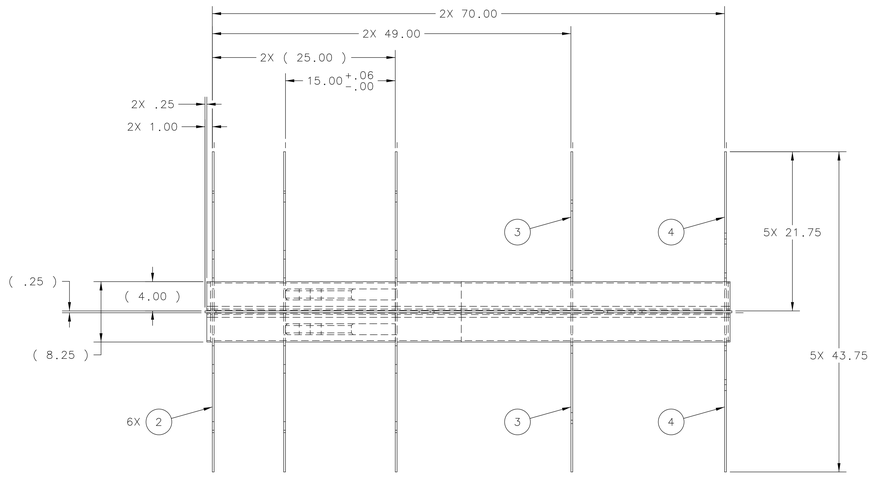

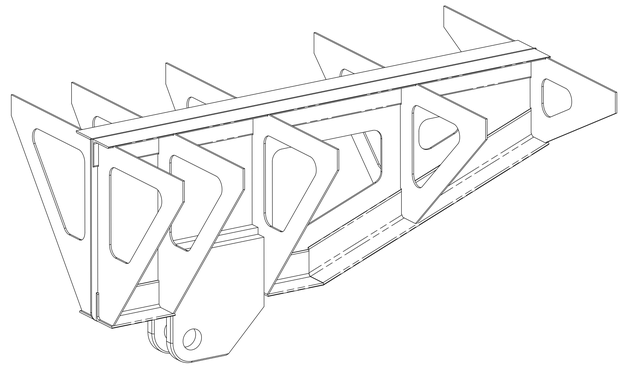

ISOMETRIC VIEW

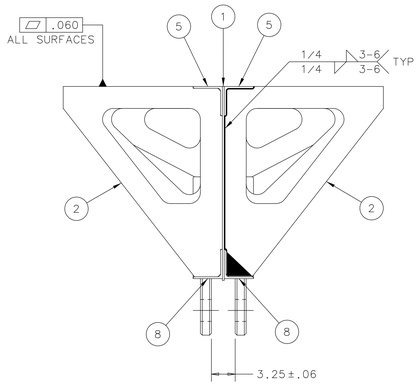

NOTE: ABOVE STAGGER WELD IS TYPICAL FOR WELDING BOTH SIDES OF ITEM 2 TO ITEMS 1, 5, 8 AND 9

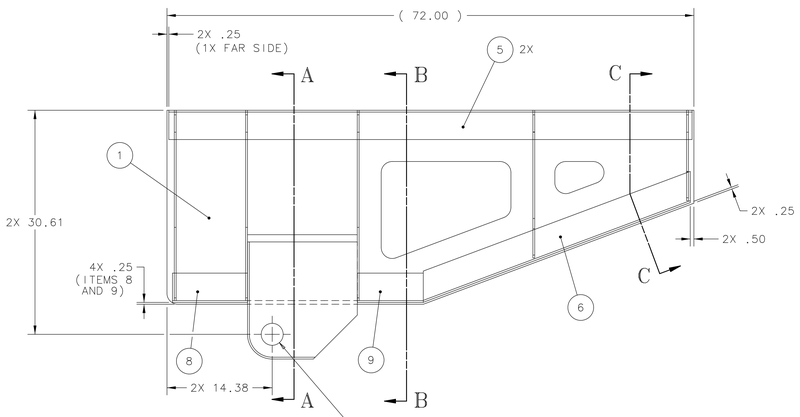

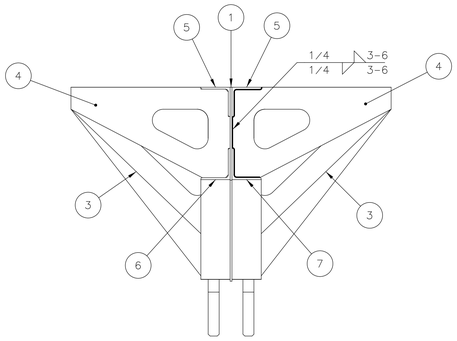

NOTE: ABOVE STAGGER WELD IS TYPICAL FOR WELDING BOTH SIDES OF ITEMS 3 AND 4 TO ITEMS 1, 5, 6 AND 7

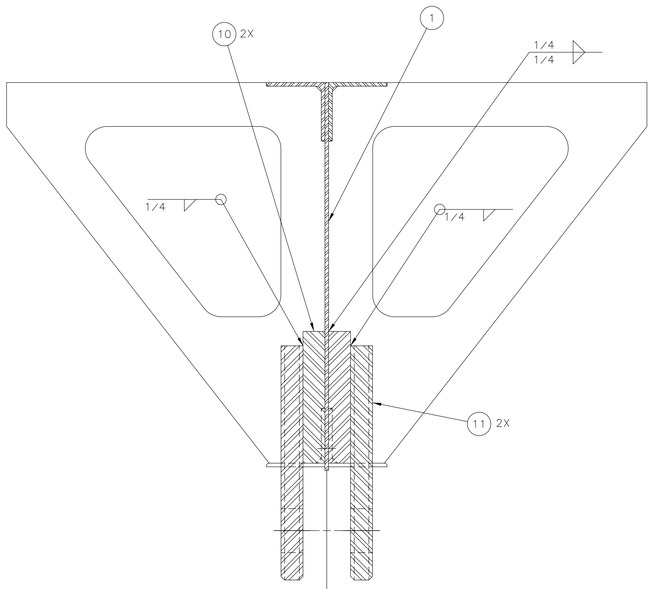

SECTION A-A

SCALE: 1:4

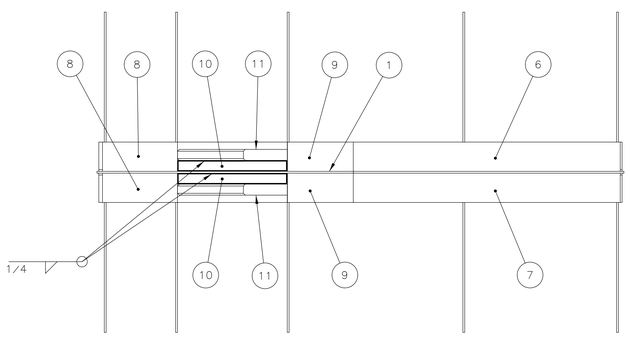

BOTTOM VIEW

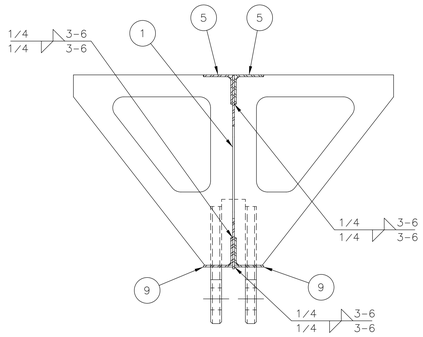

SECTION B-B

STAGGER WELDS ABOVE ARE TYPICAL FOR HORIZONTAL WELDING OF ITEM 1 TO ITEMS 5, 8 AND 9

APPROX WEIGHT: 687.61 LBS

ITEM	PART NO.	DESCRIPTION OR SIZE	QTY.
11	MB-486499	CYL CONNECTOR PLATE	2
10	MB-486790	SPACER PLATE	2
9	MB-486787	ANGLE 4X4X250X9	2
8	MB-486783	ANGLE 4X4X250X10-250	2
7	MC-486527	ANGLE 4X4X250X40-500 RT	1
6	MC-486526	ANGLE 4X4X250X40-500 LFT	1
5	MB-486785	ANGLE 4X4X250X71-500	2
4	MC-486481	GUSSET C	2
3	MC-486490	GUSSET B	2
2	MC-486486	GUSSET A	6
1	MC-486500	CENTER PLATE	1

PARTS LIST

UNLESS OTHERWISE SPECIFIED			ORIGINATOR	E.VILLEGAS	21-DEC-2010
.XX	.XXX	ANGLES	DRAWN	T.SPERRY	17-FEB-2011
± .06	± ---	± ---	CHECKED	J.RAUCH	28-APR-2011
			APPROVED	E.VILLEGAS	29-APR-2011

1. BREAK ALL SHARP EDGES .015 MAX.
2. DO NOT SCALE DRAWING.
3. DIMENSIONS BASED UPON ANSI Y14.5M-1994
4. MAX. ALL MACH. SURFACES 500
5. DRAWING UNITS: US INCHES

USED ON: ME-486921

MATERIAL: SEE PARTS LIST ABOVE

FERMI NATIONAL ACCELERATOR LABORATORY
UNITED STATES DEPARTMENT OF ENERGY

NOVA-EQUIPMENT HANDLING
ASH RIVER ASSY TABLE
AR TABLE CYL PUSHER WLDNT

SCALE	DRAWING NUMBER	SHEET	REV
1:8	3929.220-ME-486890	1 OF 1	

CREATED WITH : Ideas12NXSeries GROUP: PPD/MECHANICAL DEPARTMENT

NOTICE: IMAGE OBTAINED FROM FERMILAB WEB SITE

This information is provided for REFERENCE use only. Not for MANUFACTURE, or DESIGN INFORMATION. All information contained in this document represents work sponsored by an agency of the U.S. Government. Neither the U.S. Government nor any agency thereof, nor Universities Research Association, Inc., nor any of their employees or officers, makes any warranty, express or implied, or assumes any legal liability or responsibility for the accuracy, completeness, or usefulness of any information, apparatus, product or process disclosed, or represents that its use would not infringe privately owned rights.

NOTES:

1. UNLESS NOTED, ALL WELD JOINTS ARE TO BE STAGGERED 1/4" FILLET WELDS 3.00" LG X 6.00" PITCH WITH E70XX OR EQUIVALENT FILLER METAL.
2. ALL WELDING SHALL BE IN ACCORDANCE WITH ANSI/AWS D1.1, "STRUCTURAL WELDING CODE - STEEL"
3. ALL WELDS SHALL BE MADE IN A SEQUENCE THAT WILL BALANCE THE APPLIED WELDING HEAT WHILE THE WELDING PROGRESSES. THE PROCEDURE AND SEQUENCE SHALL BE DESIGNED TO MINIMIZE DISTORTION AND SHRINKING STRESSES.
4. ALL WELDS SHALL BE VISIBLY INSPECTED AND DYE PENETRANT INSPECTED TO DETECT SURFACE AND SUBSURFACE CRACKS AND DISCONTINUITIES IN ACCORDANCE WITH ANSI/AWS D1.1, "STRUCTURAL WELDING CODE - STEEL".
5. ALL WELDS THAT FAIL AN INSPECTION SHALL BE REPAIRED IN ACCORDANCE WITH ANSI/AWS D1.1, "STRUCTURAL WELDING CODE - STEEL".
6. PAINT WITH PRIMER, DAMP PROOF RUST-OLEUM NO. 769 OR EQUIVALENT.