REV	DESCRIPTION	DRAWN	DATE
		APPROVED	DATE
A	REPLACED ITEM 4 AND ADDED ITEM 6.	VIC MAJDANSKI	06SEP2011
		E.VILLEGAS	06SEP2011
B	ADDED ITEM 6 TO ASSEMBLY	B.ELLISON	26JAN2012
		D.FRIEND	26JAN2012

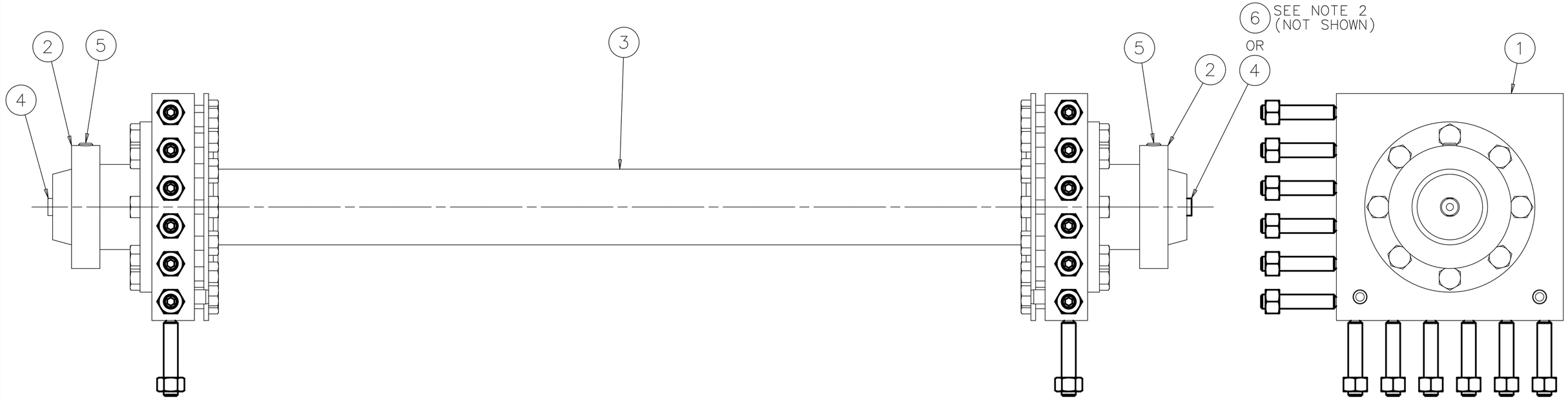

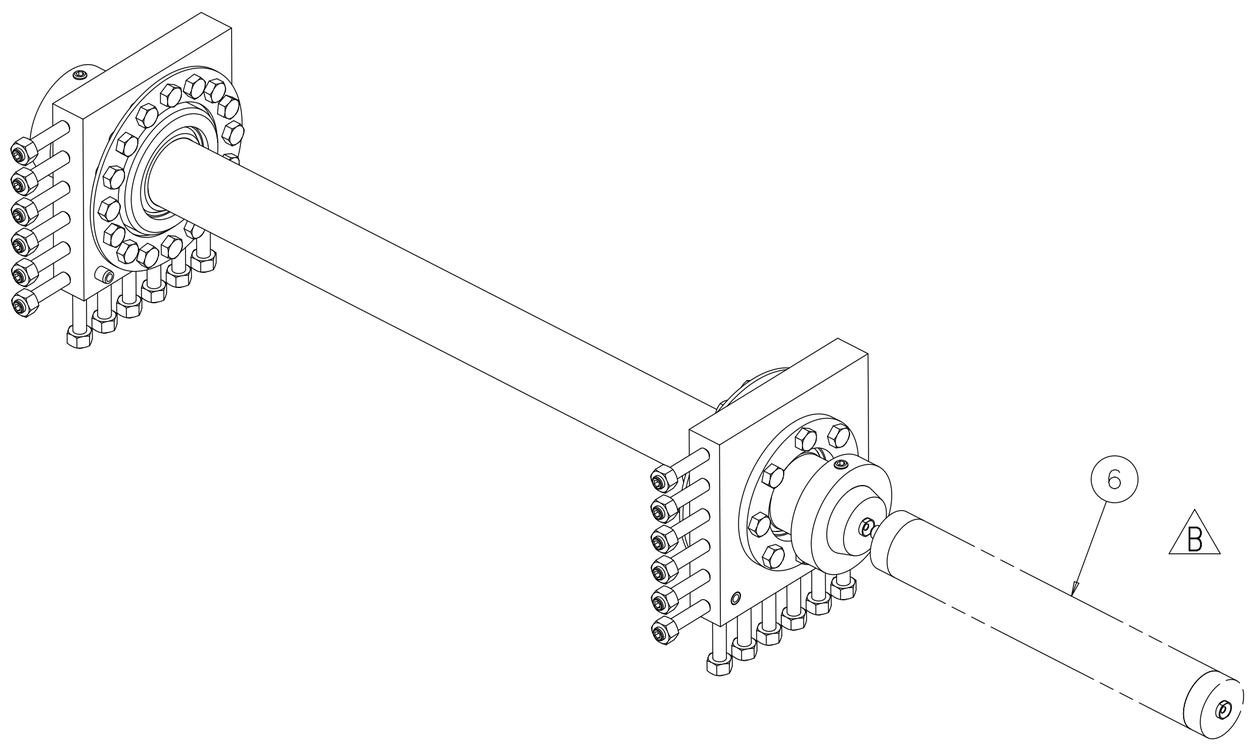

ITEM	PART NO.	DESCRIPTION OR SIZE	QTY.
A 6	MC-489080	EXTENDER - 24 LG.	1
5	COML	SET SCREW, CONE PT., 3/4-10 UNC-3A X 1.50 LG., SST	2
A 4	MB-489083	HOLDER-SURVEY PT 1-5-875 SPECIAL	2
3	MC-486578	PIVOT SHAFT, ø4.00 x 60.0 LG.	1
2	MB-486560	SHAFT LOCATOR	2
1	MC-486616	BEARING HOUSING ASSY	2

PARTS LIST

UNLESS OTHERWISE SPECIFIED					
.XX	.XXX	ANGLES	ORIGINATOR	E.VILLEGAS	29-APR-2010
± .02	± ---	± ---	DRAWN	P.POLL	11-JAN-2011
			CHECKED	J.RAUCH	29-APL-2011
			APPROVED	E.VILLEGAS	29-APL-2011

1. BREAK ALL SHARP EDGES --- MAX.
2. DO NOT SCALE DRAWING.
3. DIMENSIONS BASED UPON ASME Y14.5M-1994
4. MAX. ALL MACH. SURFACES ---
5. DRAWING UNITS: U.S. INCH

USED ON: ME-489035

MATERIAL: SEE PARTS LIST ABOVE

FERMI NATIONAL ACCELERATOR LABORATORY
UNITED STATES DEPARTMENT OF ENERGY

NOVA-EQUIPMENT HANDLING ASH RIVER ASSEMBLY TABLE TABLE PIVOT ASSEMBLY

SCALE	DRAWING NUMBER	SHEET	REV
1:4	3929.220-MC-486638	1 OF 1	B

CREATED WITH : Ideas12NXSeries | GROUP: PPD/MECHANICAL DEPARTMENT

NOTES

1. PARTS TO BE ASSEMBLED AT FINAL INSTALLATION IN SECTION A FRAME, PER DWG. ME-489035.
2. WHEN REQUIRED FOR VIEWING ITEM 4, USE ITEM 6.

NOTICE: IMAGE OBTAINED FROM FERMILAB WEB SITE

This information is provided for REFERENCE use only. Not for MANUFACTURE, or DESIGN INFORMATION. All information contained in this document represents work sponsored by an agency of the U.S. Government. Neither the U.S. Government nor any agency thereof, nor Universities Research Association, Inc., nor any of their employees or officers, makes any warranty, express or implied, or assumes any legal liability or responsibility for the accuracy, completeness, or usefulness of any information, apparatus, product or process disclosed, or represents that its use would not infringe privately owned rights.