REV	DESCRIPTION	DRAWN	DATE
		APPROVED	DATE

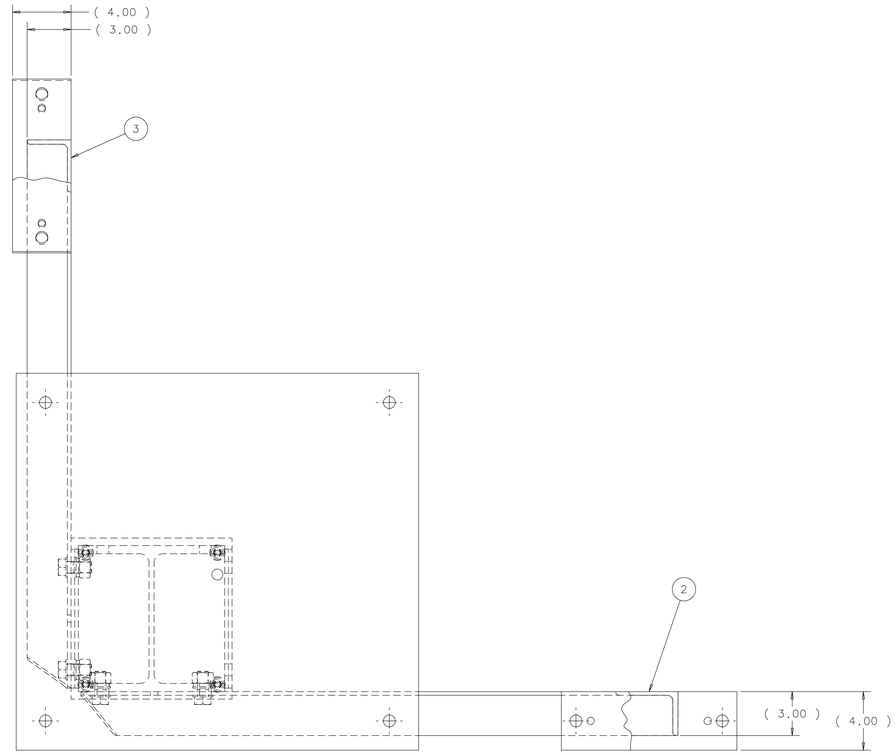

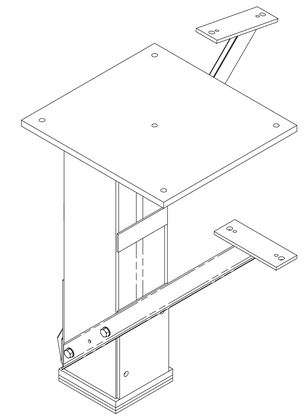

ISOMETRIC VIEW
SCALE=1/:8

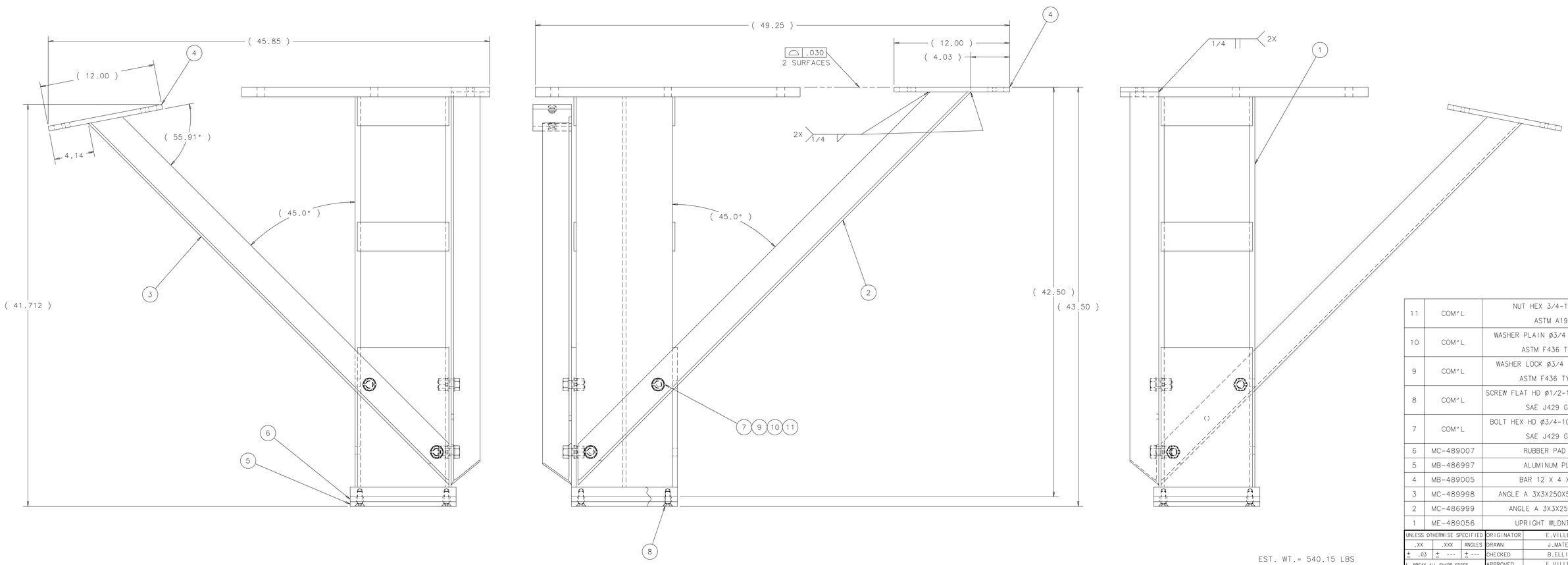

EST. WT.= 540.15 LBS

11	COM'L	NUT HEX 3/4-10 GR 8 ASTM A194	4
10	COM'L	WASHER PLAIN ø3/4 X 1 3/8 OD ASTM F436 TYPE3	8
9	COM'L	WASHER LOCK ø3/4 X 1 3/8 OD ASTM F436 TYPE 3	4
8	COM'L	SCREW FLAT HD ø1/2-13 X 1 1/4 LG SAE J429 GR 8	4
7	COM'L	BOLT HEX HD ø3/4-10 X 1 3/4 LG SAE J429 GR 8	4
6	MC-489007	RUBBER PAD 60A	1
5	MB-486997	ALUMINUM PLATE	1
4	MB-489005	BAR 12 X 4 X 1/2	2
3	MC-489998	ANGLE A 3X3X250X53-00 A DS	1
2	MC-486999	ANGLE A 3X3X250X59-40	1
1	ME-489056	UPRIGHT WLDNT A DS	1

UNLESS OTHERWISE SPECIFIED			ORIGINATOR	E.VILLEGAS	03-MAR-2011
.XX	.XXX	ANGLES	DRAWN	J.MATESKI	03-MAR-2011
± .03	± ---	± ---	CHECKED	B.ELLISON	03-MAY-2011
			APPROVED	E.VILLEGAS	03-MAY-2011
			USED ON	ME-486924	
			MATERIAL	SEE PARTS LIST ABOVE	

1. BREAK ALL SHARP EDGES .031 MAX.
2. DO NOT SCALE DRAWING.
3. DIMENSIONS BASED UPON ASME Y14.5M-1994
4. MAX. ALL MACH. SURFACES 250
5. DRAWING UNITS: U.S. INCH

FERMI NATIONAL ACCELERATOR LABORATORY
UNITED STATES DEPARTMENT OF ENERGY

NOVA-EQUIPMENT HANDLING
NOVA PIVOTER
DUNNAGE SPACER WLDNT A DS

SCALE	DRAWING NUMBER	SHEET	REV
1:4 & NOTED	3929.220-ME-486930	1 OF 1	

CREATED WITH : Ideas12NXSeries | GROUP: PPD/MECHANICAL DEPARTMENT

NOTICE: IMAGE OBTAINED FROM FERMILAB WEB SITE

This information is provided for REFERENCE use only. Not for MANUFACTURE, or DESIGN INFORMATION. All information contained in this document represents work sponsored by an agency of the U.S. Government. Neither the U.S. Government nor any agency thereof, nor Universities Research Association, Inc., nor any of their employees or officers, makes any warranty, express or implied, or assumes any legal liability or responsibility for the accuracy, completeness, or usefulness of any information, apparatus, product or process disclosed, or represents that its use would not infringe privately owned rights.