REV	DESCRIPTION	DRAWN	DATE
		APPROVED	DATE

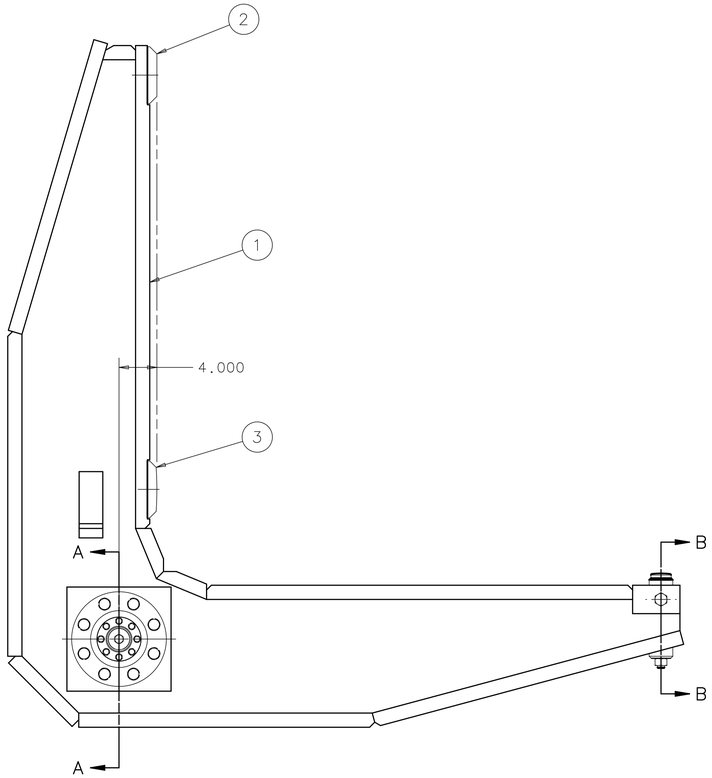

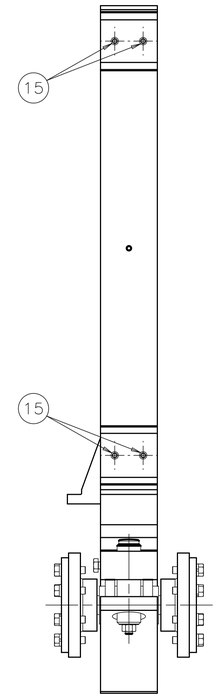

EST. WEIGHT: 1515 LBS.

NOTE

ASSEMBLE AS SHOWN FOR FIT; ASSEMBLY TO BE COMPLETED AT INSTALLATION IN TABLE PER DWG'S ME-489026 & ME-489027.

ITEM	PART NO.	DESCRIPTION OR SIZE	QTY.
19	MB-489015	HEX NUT, 3/4-10 MODIFIED	1
18	COML	WASHER, LOCK, 3/4 SCREW	16
17	COML	WASHER, LOCK, 1/2 SCREW	2
16	COML	WASHER, LOCK, 3/8 SCREW	16
15	COML	SCREW, SOC.HD.CAP, 1/2-13 UNC x 1.00 LG., GR. 5	4
14	COML	SCREW, HEX HD., 3/4-10 UNC x 2.00 LG., BRASS	1
13	COML	SCREW, HEX HD., 3/4-10 UNC x 2.750 LG., GR. 8	16
12	COML	SCREW, HEX HD., 1/2-13 UNC x 1.250 LG.,GR.8; FULLY THREADED	2
11	COML	SCREW, HEX HD., 3/8-16 UNC x 1.500 LG., GR.8	16
10	MB-489014	ACME SCREW, #2 1/2-4	1
9	20SF32	BEARING, TIMKEN	2
8	MB-486852	FORK SHAFT RETAINER	2
7	MB-486851	FORK SHAFT	1
6	MC-486849	FORK HOUSING CLAMP	2
5	MB-486840	FORK BEARING HOUSING	2
4	MB-486835	FORK BEARING CLAMP	2
3	MB-486831	PALLET SPACER, ROUNDED	1
2	MB-486829	PALLET SPACER, FLAT	1
1	MD-486870	PALLET FORK RIGHT WELDMENT	1

PARTS LIST

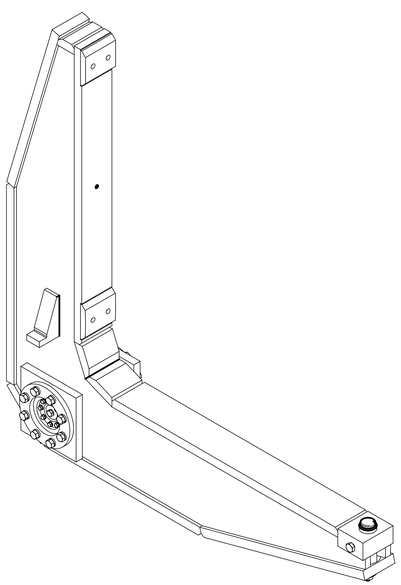

ISOMETRIC VIEW

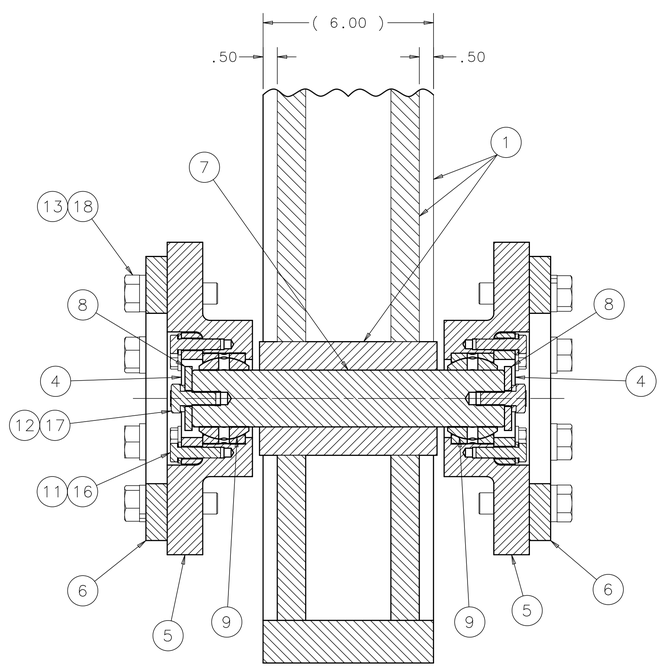

SECTION A-A

SCALE = NONE

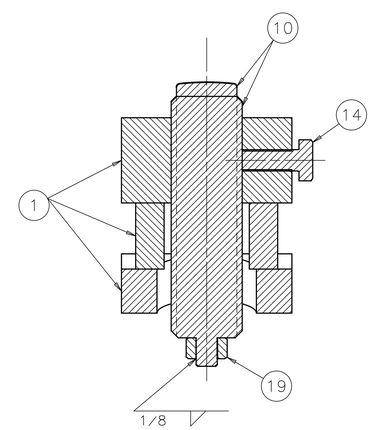

SECTION B-B

SCALE = NONE

UNLESS OTHERWISE SPECIFIED					
.XX	.XXX	ANGLES	ORIGINATOR	E.VILLEGAS	21-DEC-2010
± .06	± .010	± 1°	DRAWN	P.POLL	23-FEB-2011
			CHECKED	J.RAUCH	29-APR-2011
			APPROVED	E.VILLEGAS	29-APR-2011

1. BREAK ALL SHARP EDGES .015 MAX.
2. DO NOT SCALE DRAWING.
3. DIMENSIONS BASED UPON ASME Y14.5M-1994
4. MAX. ALL MACH. SURFACES 250
5. DRAWING UNITS: U.S.INCH

USED ON: ME-486926 & ME-486927

MATERIAL: SEE PARTS LIST ABOVE

FERMI NATIONAL ACCELERATOR LABORATORY
UNITED STATES DEPARTMENT OF ENERGY

NOVA-EQUIPMENT HANDLING ASH RIVER ASSY TABLE PALLET FORK ASSY, RIGHT

SCALE	DRAWING NUMBER	SHEET	REV
1:8 & NOTED	9219.220-MD-486906	1 OF 1	

CREATED WITH : Ideas12NXSeries | GROUP: PPD/MECHANICAL DEPARTMENT

NOTICE: IMAGE OBTAINED FROM FERMILAB WEB SITE

This information is provided for REFERENCE use only. Not for MANUFACTURE, or DESIGN INFORMATION. All information contained in this document represents work sponsored by an agency of the U.S. Government. Neither the U.S. Government nor any agency thereof, nor Universities Research Association, Inc., nor any of their employees or officers, makes any warranty, express or implied, or assumes any legal liability or responsibility for the accuracy, completeness, or usefulness of any information, apparatus, product or process disclosed, or represents that its use would not infringe privately owned rights.