REV	DESCRIPTION	DRAWN	DATE
		APPROVED	DATE
A	ADDED DIMENSIONS. DIM. 23.250 WAS 22.750, 23.125 WAS 22.625. ITEM 4 THK. FROM .75 TO 1.00.	VIC MAJDANSKI	13MAY2011
		E.VILLEGAS	13MAY2011
B	RELOCATED DATUM FEATURE. WELDING INFO MOVED FOR CLARITY. DIMENSIONS WERE .XXX	VIC MAJDANSKI	08JUN2011
		E.VILLEGAS	08JUN2011

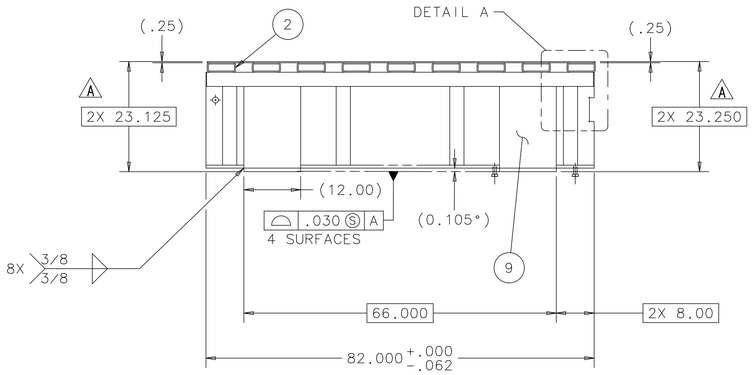

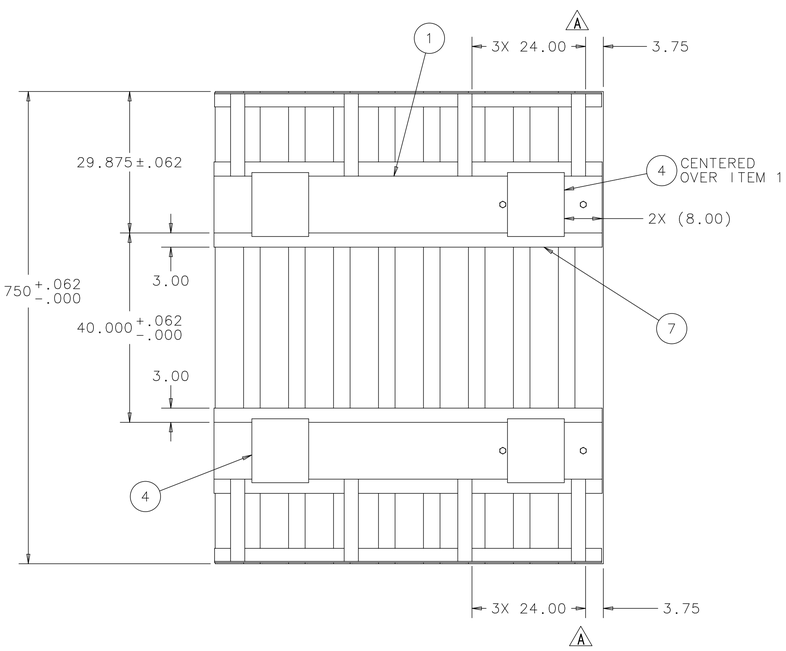

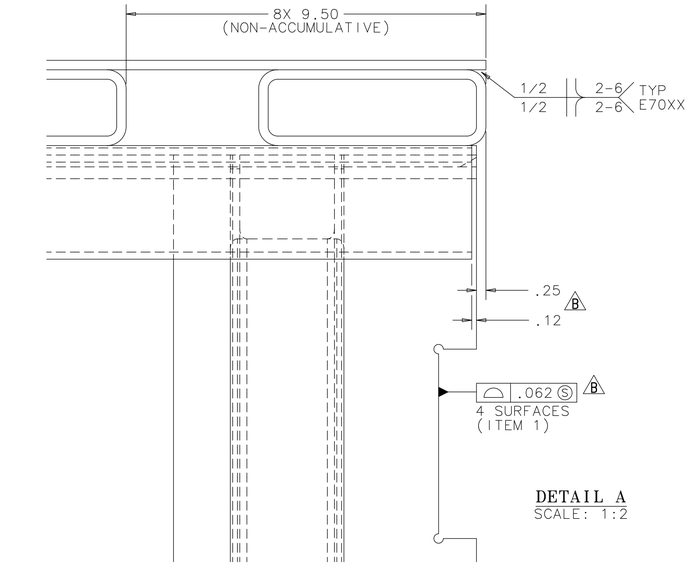

DETAIL A
SCALE: 1:2

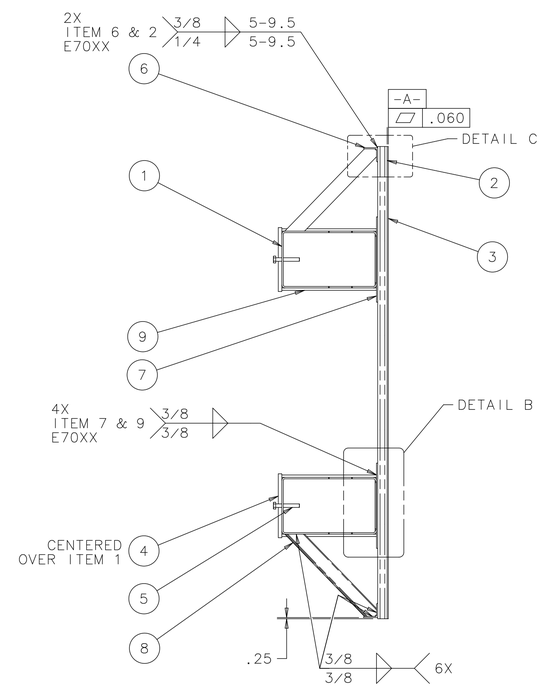

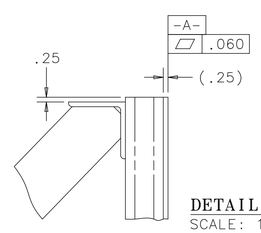

DETAIL C
SCALE: 1:4

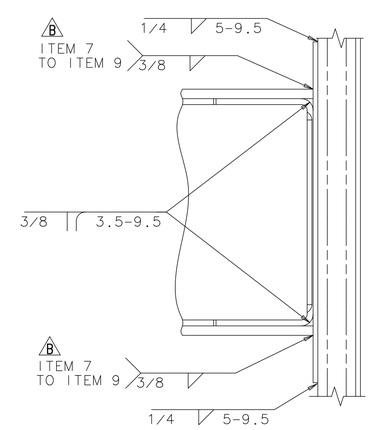

DETAIL B
SCALE: 1:4

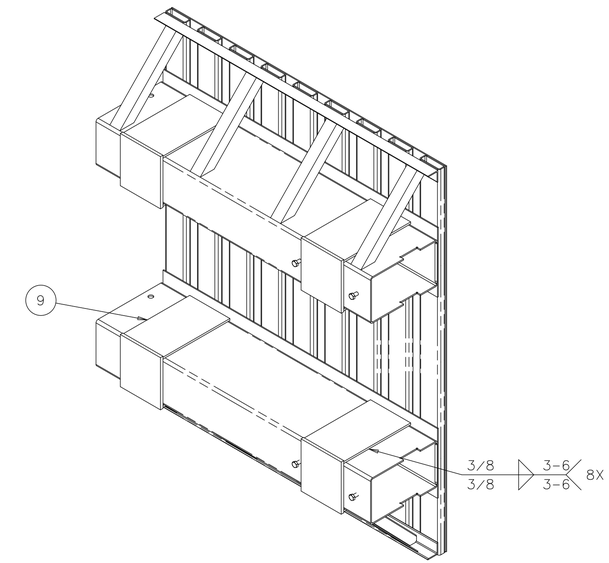

ISOMETRIC VIEW

EST WT.=3153 LBS

ITEM	PART NO.	DESCRIPTION OR SIZE	QTY.
9	COML	PLATE, 12.00 X 19.94 +.00/-.06 X .50 THK. ASTM A 36 STL.	8
8	MB-489066	ANGLE, MOD 3 X 3 X 1/4 X 26 LG	8
7	COML	PLATE, 18.00 X 82.00 X 1/4 THK. STEEL ASTM A36	2
6	COML	ANGLE, 3 X 3 X 1/4 THK. 81.75 LG ASTM A 36 STL.	4
5	COML	SCREW, HX HD. 3/4-10 UNC X 5.00 LG. ZINC COATED STL, FULLY THREADED	4
4	COML	PLATE, 12.00 X 13.50 X 1.00 THK. ASTM A 36 STL. A	4
3	COML	PLATE, 99.75 X 82.00 X .25 THK. ASTM A 36 STL.	1
2	COML	TUBE, 6.00 X 2.00 X .25 WALL X 99.75 LG. ASTM A 500 GR B STL.	9
1	MD-486966	TUBING STRUCTURAL 20X12X625X82.00	2

PARTS LIST

NOTES:

1. ALL WELDS TO BE E70XX OR EQUIVALENT.
2. ALL WELDING SHALL BE IN ACCORDANCE WITH ANSI/AWS D1.1, "STRUCTURAL WELDING CODE - STEEL"
3. ALL WELDS SHALL BE MADE IN A SEQUENCE THAT WILL BALANCE THE APPLIED WELDING HEAT WHILE THE WELDING PROGRESSES. THE PROCEDURE AND SEQUENCE SHALL BE DESIGNED TO MINIMIZE DISTORTION AND SHRINKAGE STRESSES.
4. ALL WELDS SHALL BE VISUALLY INSPECTED AND DYE PENETRANT INSPECTED TO DETECT SURFACE AND SUBSURFACE CRACKS AND DISCONTINUITES IN ACCORDANCE WITH ANSI/AWS D1.1, "STRUCTURAL WELDING CODE - STEEL".
5. ALL WELDS THAT FAIL AN INSPECTION SHALL BE REPAIRED IN ACCORDANCE WITH ANSI/AWS D1.1, "STRUCTURAL WELDING CODE - STEEL".
6. PAINT WITH PRIMER, DAMP PROOF RUST-OLEUM NO 769.

UNLESS OTHERWISE SPECIFIED			ORIGINATOR	E.VILLEGAS	01-FEB-2011
.XX	.XXX	ANGLES	DRAWN	V.MAJDANSKI	01-FEB-2011
± .03	± .015	± ---	CHECKED	J.RAUCH	04-MAY-2011
			APPROVED	E.VILLEGAS	04-MAY-2011

1. BREAK ALL SHARP EDGES .015 MAX.
2. DO NOT SCALE DRAWING.
3. DIMENSIONS BASED UPON ASME Y14.5M-1994
4. MAX. ALL MACH. SURFACES 250
5. DRAWING UNITS: U.S. INCH

USED ON: ME-486926

MATERIAL: SEE PARTS LIST ABOVE

FERMI NATIONAL ACCELERATOR LABORATORY
UNITED STATES DEPARTMENT OF ENERGY

NOVA-EQUIPMENT HANDLING AR TABLE PIVOT MODULE AR PALLET SEGMENT

SCALE	DRAWING NUMBER	SHEET	REV
1:16 & AS NOTED	3929.220-MD-486833	1 OF 1	B

CREATED WITH : Ideas12NXSeries | GROUP: PPD/MECHANICAL DEPARTMENT

NOTICE: IMAGE OBTAINED FROM FERMILAB WEB SITE

This information is provided for REFERENCE use only. Not for MANUFACTURE, or DESIGN INFORMATION. All information contained in this document represents work sponsored by an agency of the U.S. Government. Neither the U.S. Government nor any agency thereof, nor Universities Research Association, Inc., nor any of their employees or officers, makes any warranty, express or implied, or assumes any legal liability or responsibility for the accuracy, completeness, or usefulness of any information, apparatus, product or process disclosed, or represents that its use would not infringe privately owned rights.