REV	DESCRIPTION	DRAWN / APPROVED	DATE / DATE

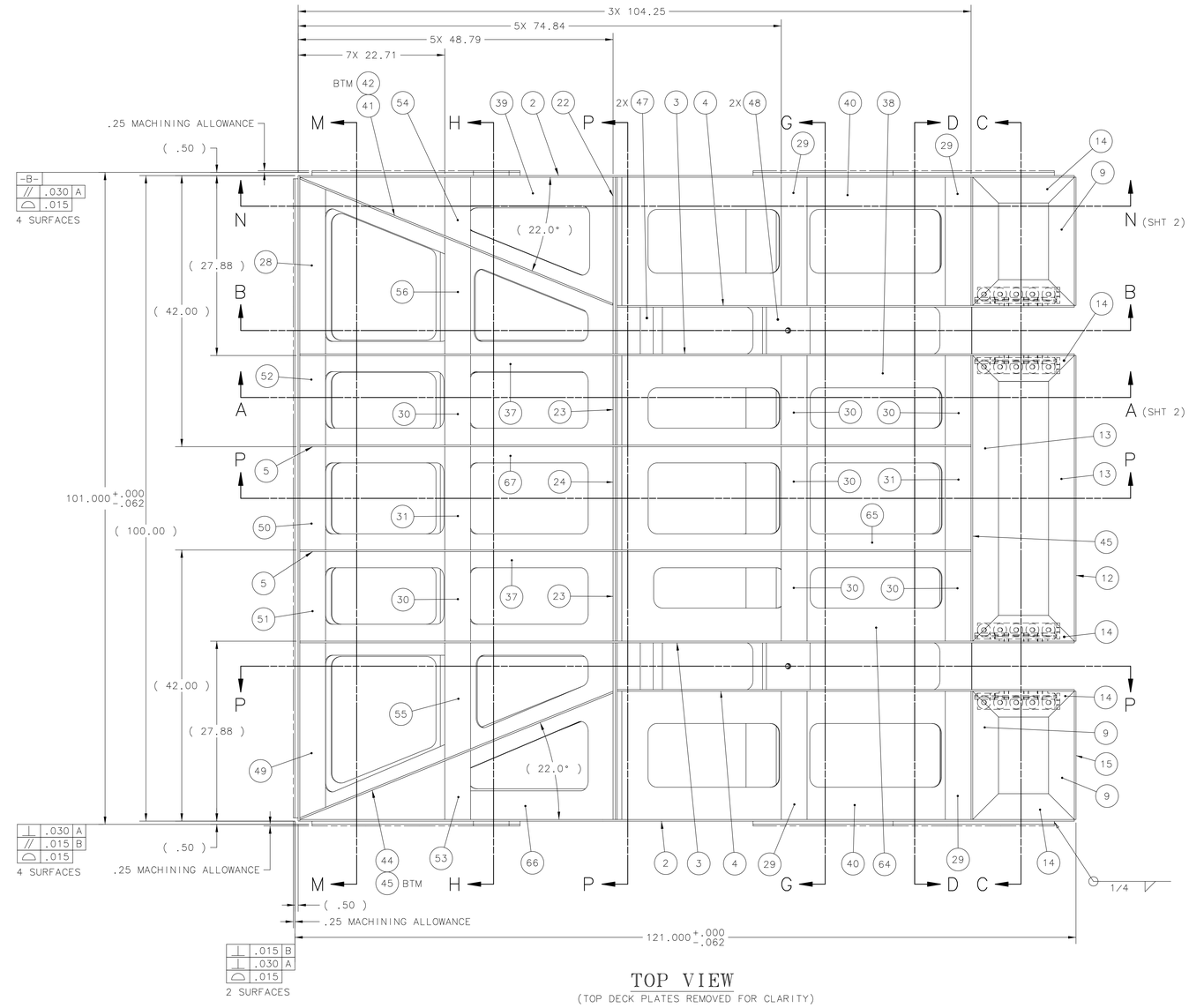

TOP VIEW
(TOP DECK PLATES REMOVED FOR CLARITY)

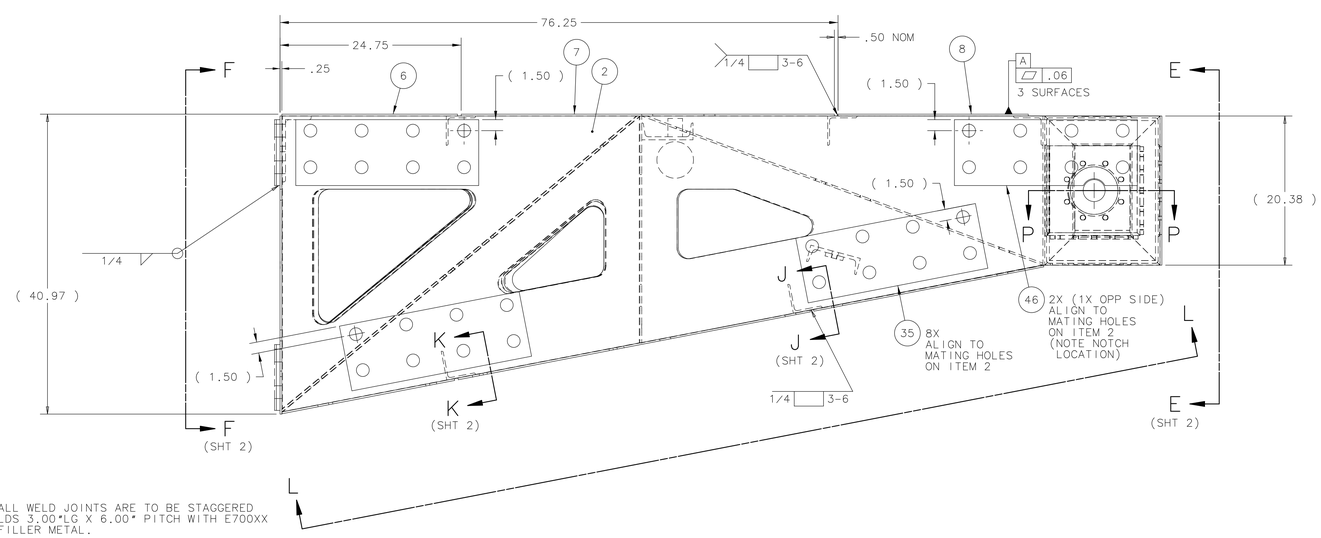

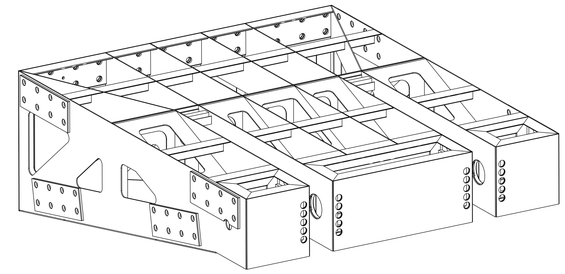

ISOMETRIC VIEW
(DECK PLATES REMOVED)
SCALE 1:16

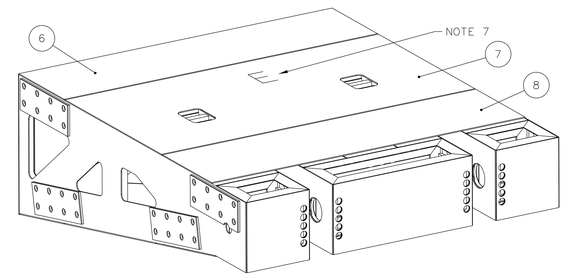

ISOMETRIC VIEW
SCALE 1:16

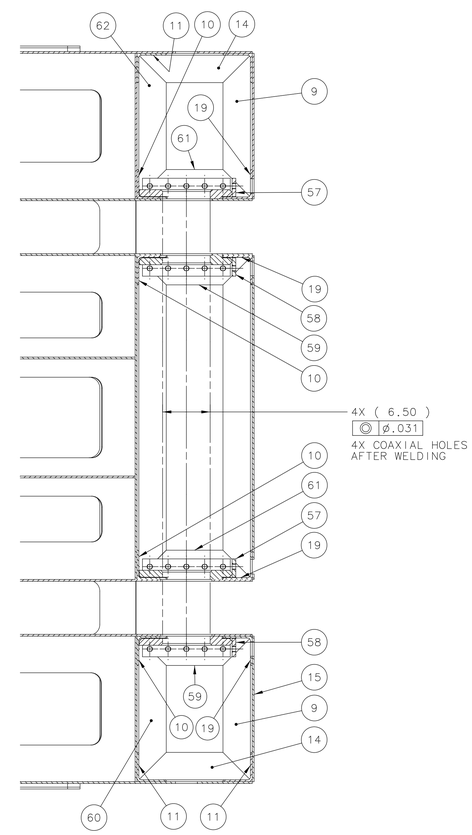

SECTION P-P

ITEM	PART NO.	DESCRIPTION OR SIZE	QTY.
67	MC-486903	AR SECTION C DIAG H PLATE	1
66	MC-486721	AR SECTION C DIAG F PLATE	1
65	MC-486899	AR SECTION C DIAG D PLATE	1
64	MC-486898	AR SECTION C DIAG C PLATE	1
63	MC-489041	ANGLE 4X4X250X44-250 END HOLES	1
62	MB-489022	ANGLE 4X4X250X19-875 1 HOLE RT	2
61	MB-489019	ANGLE 4X4X250X15-750 4 HOLE RT	2
60	MB-489021	ANGLE 4X4X250X19-875 1 HOLE LEFT	2
59	MB-489018	ANGLE 4X4X250X15-750 4 HOLE LEFT	2
58	MC-486873	LEFT SIDE ASSY A WLDNT	2
57	MC-486868	RIGHT SIDE ASSY B WLDNT	2
56	MC-486979	ANGLE 4X4X250X18-250 RT CUT TOP	1
55	MC-486980	ANGLE 4X4X250X18-013 LFT CUT TOP	1
54	MC-486981	ANGLE 4X4X250X10-68 RT CUT TOP	1
53	MC-486982	ANGLE 4X4X250X10-68 LFT CUT TOP	1
52	MC-486983	ANGLE 9X4X500 13-875 R	1
51	MC-486984	ANGLE 9X4X500 13-875 L	1
50	MB-486700	ANGLE 9X4X500X16	1
49	MC-486530	ANGLE 9X4X500X27.11 LFT CUT	1
48	MC-486969	PALLET STOP WELDMENT	2
47	MC-486972	ACME SCREW ANCHOR WELDMENT	2
46	MC-486996	FLAT PLATE NOTCHED 500X9X25	2
45	MC-487537	AR SECTION C LONGL E PLATE	1
44	MC-486536	AR SECTION C LONGL D PLATE	1
43	MB-486762	AR SECTION C TRANSV G PLATE	2
42	MC-486594	AR SECTION C LONGL G PLATE	1
41	MC-486576	AR SECTION C LONGL F PLATE	1
40	MC-486719	AR SECTION C DIAG A PLATE	2
39	MC-486720	AR SECTION C DIAG E PLATE	1
38	MC-486895	AR SECTION C DIAG B PLATE	1
37	MC-486723	AR SECTION C DIAG G PLATE	2
36	MC-486520	ANGLE 4X4X250X18.17 RT CUT	1
35	MC-486506	FLAT PLATE 500X9X25	6
34	MC-486519	ANGLE 4X4X250X18.42 LFT CUT	1
33	MC-486514	ANGLE 4X4X250X10-682 RT CUT	1
32	MC-486513	ANGLE 4X4X250X10-682 LFT CUT	1
31	MC-486518	ANGLE 4X4X250X16	5
30	MB-489060	ANGLE 4X4X250X13-875	10
29	MB-486755	ANGLE 4X4X250X19-875	6
28	MC-486533	ANGLE 9X4X500X28-250 RT CUT	1
27	MC-486502	BOTTOM PLATE 250X32X100	1
26	MC-486503	BOTTOM PLATE 25X49X100	1
25	MC-486501	BOTTOM PLATE 250X24X100	1
24	MC-486491	AR SECTION D TRANSV B PLATE	1
23	MB-486715	AR SECTION C TRANSV C PLATE	3
22	MB-486716	AR SECTION C TRANSV D PLATE	2
21	MC-486489	AR SECTION D TRANSV A PLATE	1
20	MC-486507	FLAT PLATE 500X9X25	8
19	MB-486632	ANGLE 4X4X250X20-375 45 CUT FRNT	2
18	MB-486770	AR SECTION C TRANSV H PLATE	1
17	-	-	-
16	-	-	-
15	MB-486718	AR SECTION C TRANSV G PLATE RT	2
14	MB-486617	ANGLE 4X4X250X15-750 45 DBL CUT	8
13	MC-486976	ANGLE 4X4X250X44-250 45 CUT	3
12	MC-486978	AR SECT C TRANSV H PLATE FRNT	1
11	MB-486635	ANGLE 4X4X250X20-375 45 DBL CUT	4
10	MB-486619	ANGLE 4X4X250X20-375 45 CUT CL	2
9	MB-486618	ANGLE 4X4X250X19-875 45 DBL CUT	6
8	MC-486774	DECK PLATE 250X26X100	1
7	MC-486914	DECK PLATE 250X51X100	1
6	MC-486504	DECK PLATE 250X24X100	1
5	MC-486534	AR SECTION C LONGL B PLATE	2
4	MC-486591	AR SECTION C LONGL H PLATE	2
3	MC-486535	AR SECTION C LONGL C PLATE	2
2	MD-486522	AR SECTION C LONGL A PLATE	2
1	- -	- -	-

PARTS LIST

NOTES:

1. UNLESS NOTED, ALL WELD JOINTS ARE TO BE STAGGERED 1±4" FILLET WELDS 3.00"LG X 6.00" PITCH WITH E700XX OR EQUIVALENT FILLER METAL.
2. ALL WELDING SHALL BE IN ACCORDANCE WITH ANSI/AWS D1.1, "STRUCTURAL WELDING CODE - STEEL"
3. ALL WELDS SHALL BE MADE IN A SEQUENCE THAT WILL BALANCE THE APPLIED WELDING HEAT WHILE THE WELDING PROGRESSES. THE PROCEDURE AND SEQUENCE SHALL BE DESIGNED TO MINIMIZE DISTORTION AND SHRINKAGE STRESSES.
4. ALL WELDS SHALL BE VISUALLY INSPECTED AND DYE PENETRANT INSPECTED TO DETECT SURFACE AND SUBSURFACE± CRACKS AND DISCONTINUITIES IN ACCORDANCE WITH ANSI/AWS D1.1, "STRUCTURAL WELDING CODE - STEEL".
5. ALL WELDS THAT FAIL AN INSPECTION SHALL BE REPAIRED IN ACCORDANCE WITH ANSI/AWS D1.1, "STRUCTURAL WELDING CODE - STEEL".
6. PAINT WITH PRIMER, DAMP-PROOF RUST-OLEUM NO. 769 OR EQUIVALENT.
7. ITEMS WITH "E" STAMP, NOTE THE POSITION TO AID CORRECT POSITIONING.

UNLESS OTHERWISE SPECIFIED			ORIGINATOR	E.VILLEGAS	21-DEC-2010
.XX	.XXX	ANGLES	DRAWN	T.SPERRY	24-MAR-2011
± .03	± - -	± 1°	CHECKED	J.RAUCH	29-APR-2011
			APPROVED	E.VILLEGAS	29-APR-2011

1. BREAK ALL SHARP EDGES MAX
2. DO NOT SCALE DRAWING.
3. DIMENSIONS BASED UPON ASME Y14.5M-1994
4. MAX. ALL MACH. SURFACES 250
5. DRAWING UNITS: U.S. INCH

USED ON: ME-486926

MATERIAL: SEE PARTS LIST ABOVE

FERMI NATIONAL ACCELERATOR LABORATORY
UNITED STATES DEPARTMENT OF ENERGY

NOVA-EQUIPMENT HANDLING ASH RIVER ASSY TABLE AR SECTION C WELDMENT

SCALE	DRAWING NUMBER	SHEET	REV
1:8 & AS NOTED	3929.220-ME-486989	1 OF 3	

CREATED WITH : Ideas12NXSeries GROUP: PPD/MECHANICAL DEPARTMENT

REV	DESCRIPTION	DRAWN	DATE
		APPROVED	DATE

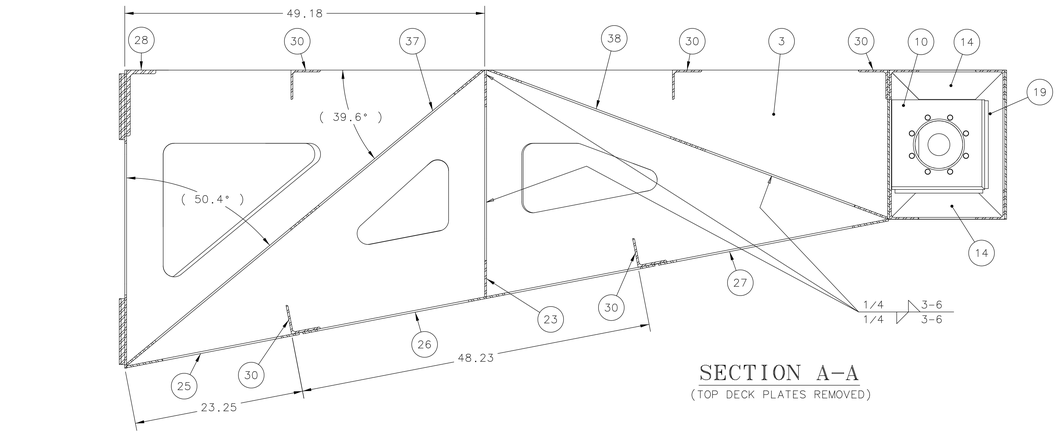

SECTION A-A
(TOP DECK PLATES REMOVED)

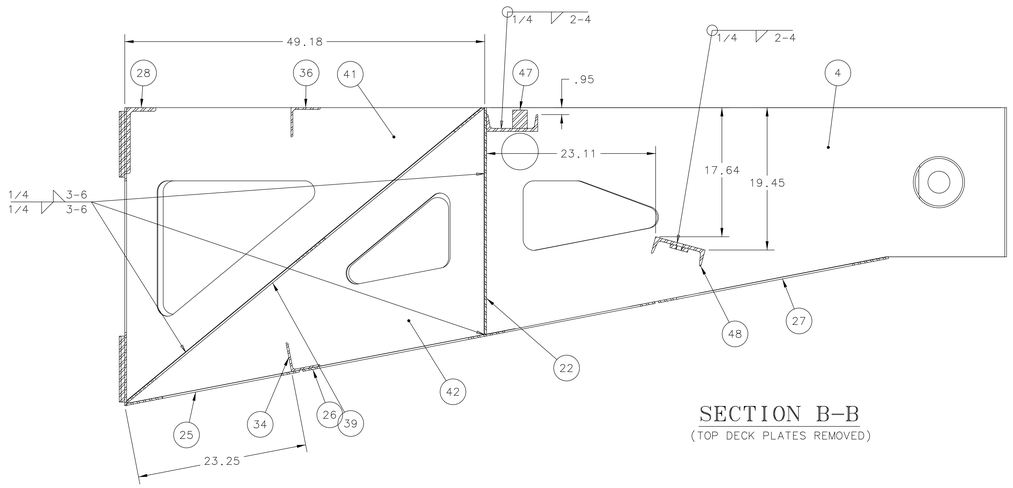

SECTION B-B
(TOP DECK PLATES REMOVED)

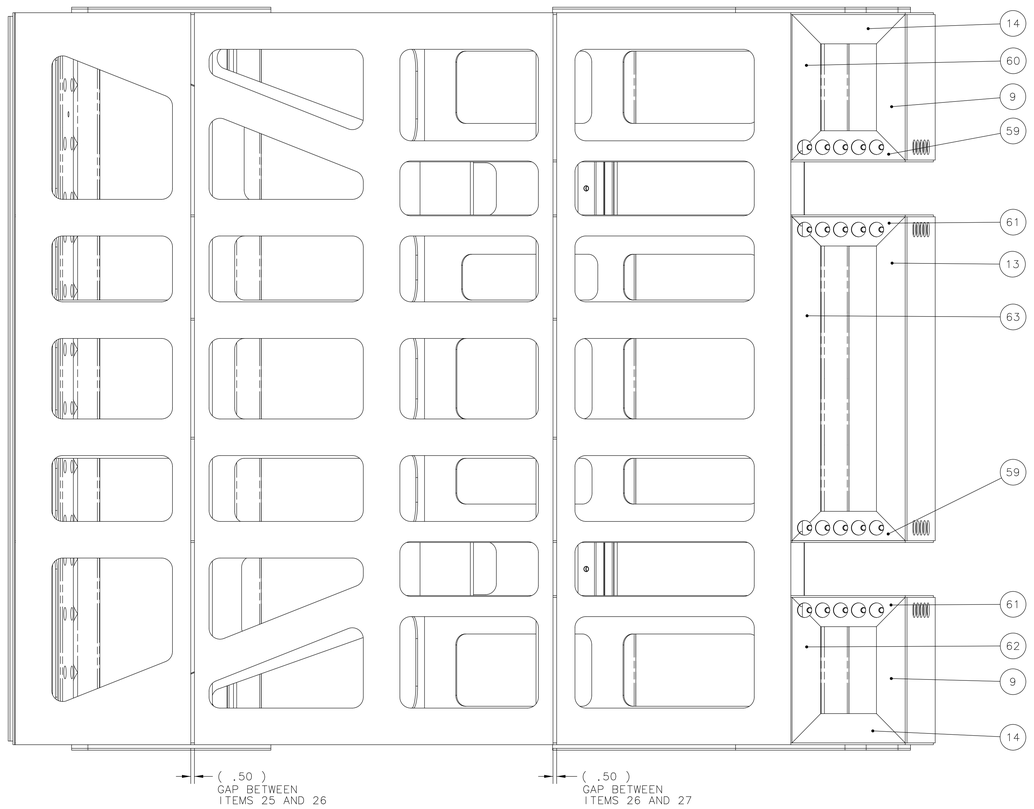

VIEW L-L
(ROTATED 10.91° CW)

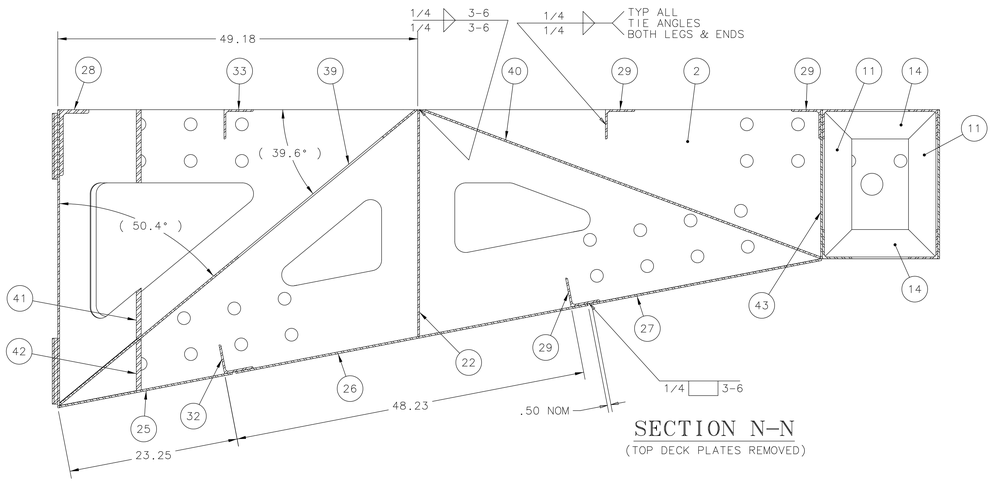

SECTION N-N
(TOP DECK PLATES REMOVED)

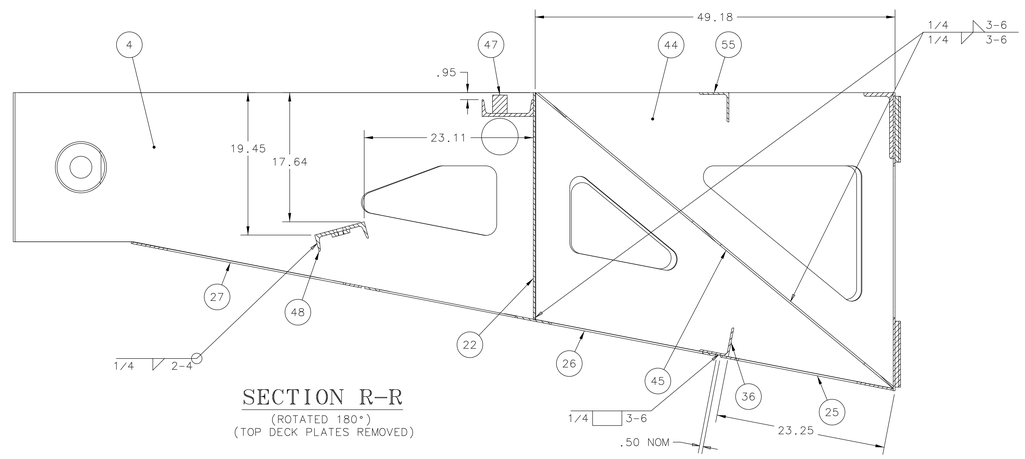

SECTION R-R
(ROTATED 180°)
(TOP DECK PLATES REMOVED)

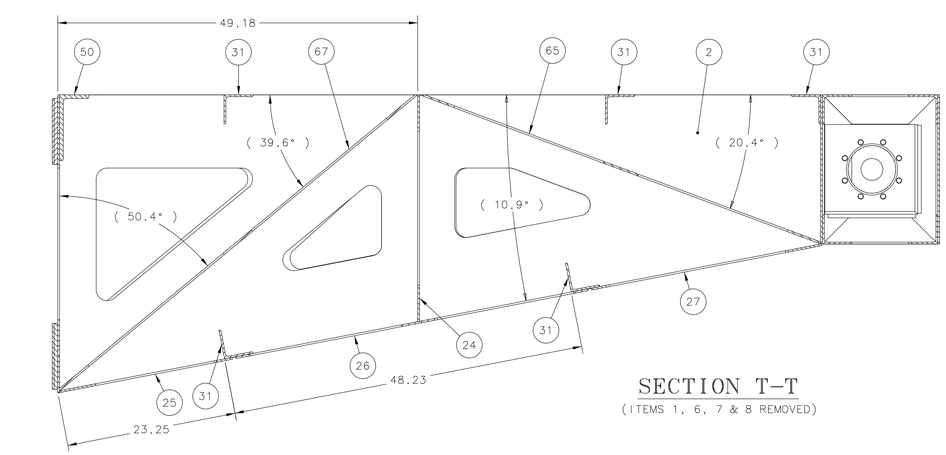

SECTION T-T
(ITEMS 1, 6, 7 & 8 REMOVED)

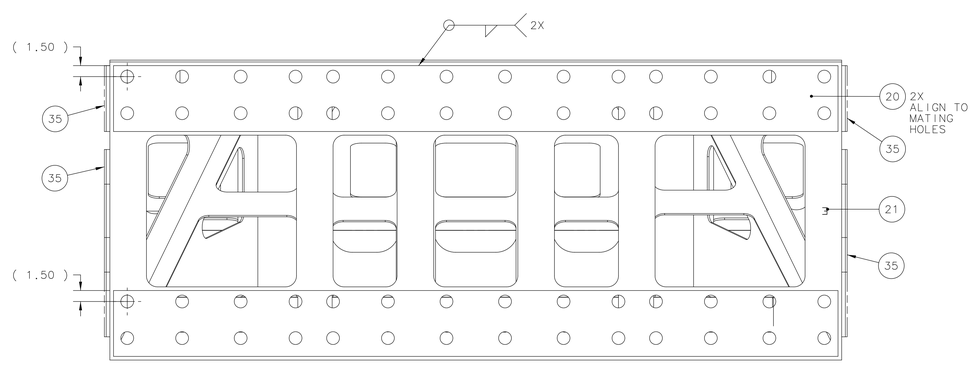

VIEW F-F

UNLESS OTHERWISE SPECIFIED			ORIGINATOR	E.VILLEGAS	21-DEC-2010
.XX	.XXX	ANGLES	DRAWN	T.SPERRY	24-MAR-2011
± .03	± - -	± 1°	CHECKED	J.RAUCH	29-APR-2011
1. BREAK ALL SHARP EDGES MAX. 2. DO NOT SCALE DRAWING. 3. DIMENSIONS BASED UPON ASME Y14.5M-1994 4. MAX. ALL MACH. SURFACES 250 5. DRAWING UNITS: U.S. INCH			APPROVED	E.VILLEGAS	29-APR-2011
			USED ON	ME-486926	
			MATERIAL	SEE PARTS LIST ABOVE	

FERMI NATIONAL ACCELERATOR LABORATORY
UNITED STATES DEPARTMENT OF ENERGY

NOVA-EQUIPMENT HANDLING
ASH RIVER ASSY TABLE
AR SECTION C WELDMENT

SCALE	DRAWING NUMBER	SHEET	REV
1:8 & AS NOTED	3929.220-ME-486989	2 OF 3	

CREATED WITH : Ideas12NXSeries GROUP: PPD/MECHANICAL DEPARTMENT

REV	DESCRIPTION	DRAWN	DATE
		APPROVED	DATE

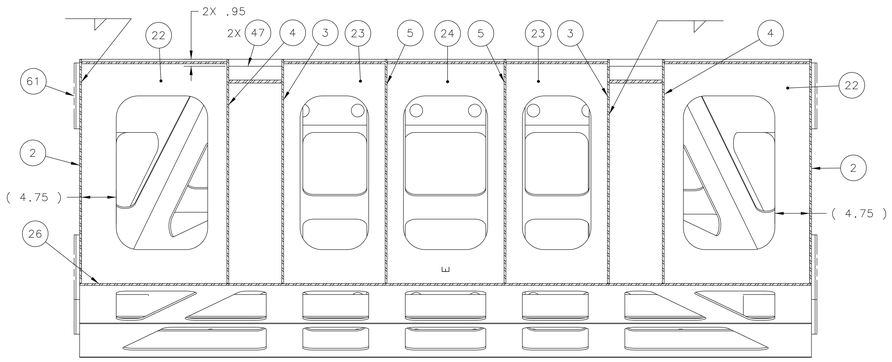

SECTION P-P

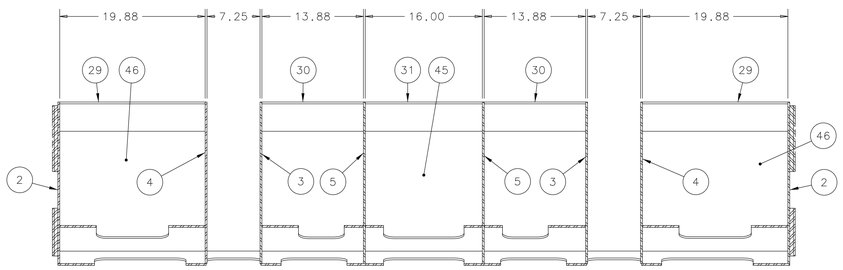

SECTION D-D

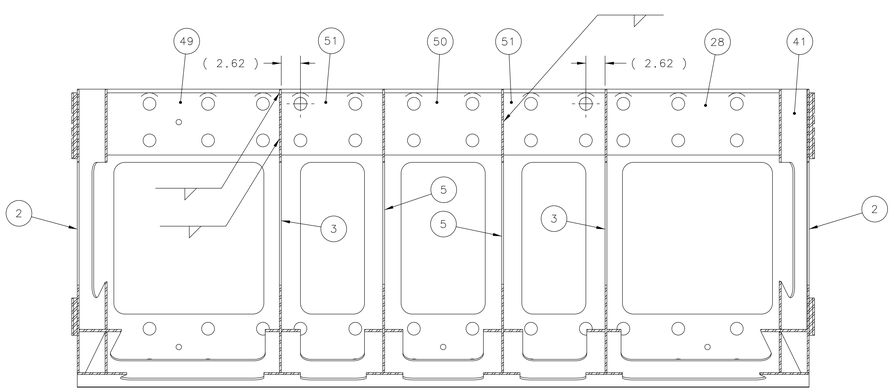

SECTION M-M

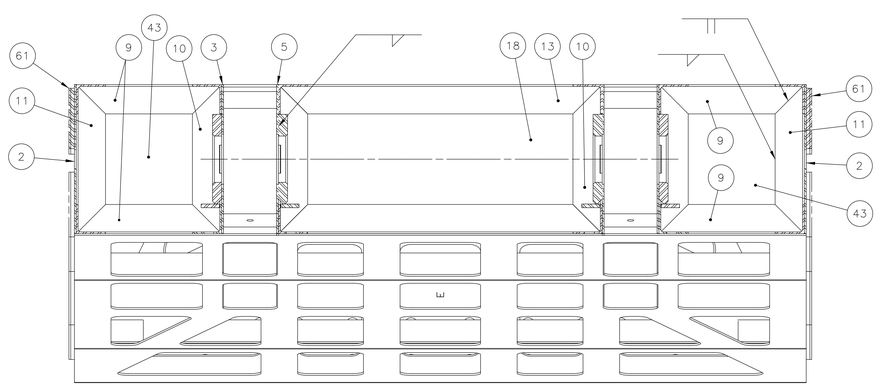

SECTION C-C

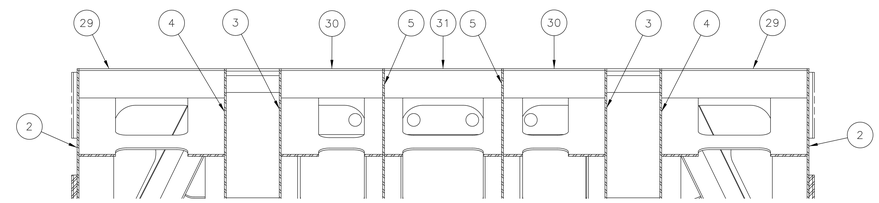

SECTION G-G

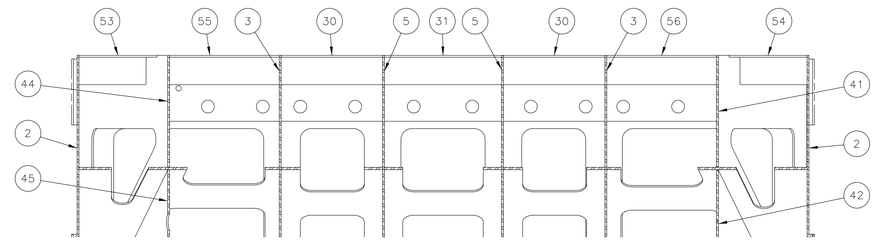

SECTION H-H

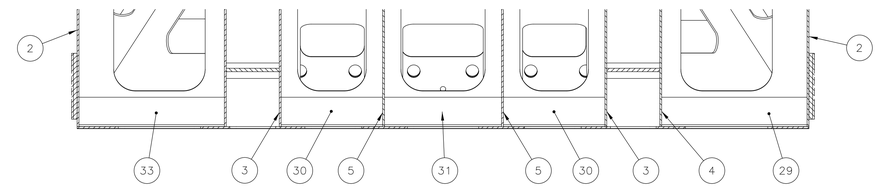

SECTION J-J

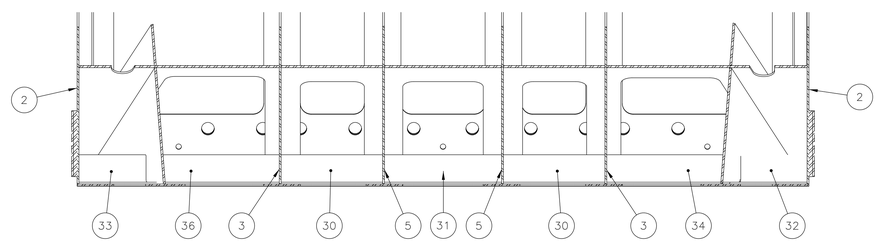

SECTION K-K

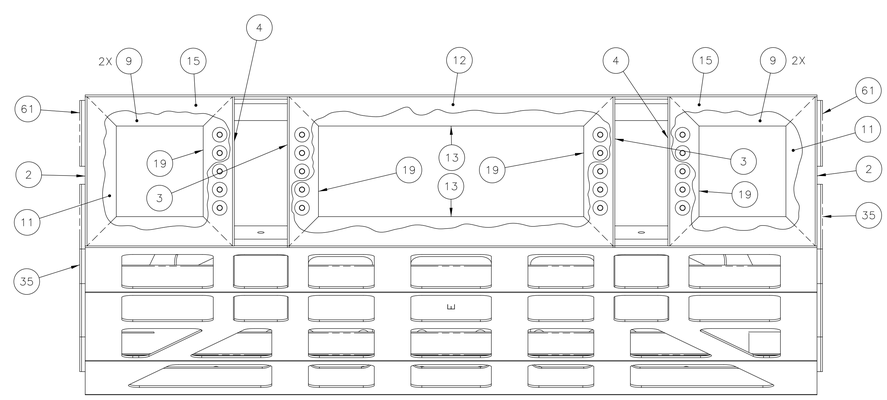

VIEW E-E

UNLESS OTHERWISE SPECIFIED			ORIGINATOR	E.VILLEGAS	21-DEC-2010
.XX	.XXX	ANGLES	DRAWN	T.SPERRY	24-MAR-2011
± .03	± - -	± 1°	CHECKED	J.RAUCH	29-APR-2011
1. BREAK ALL SHARP EDGES MAX. 2. DO NOT SCALE DRAWING. 3. DIMENSIONS BASED UPON ASME Y14.5M-1994 4. MAX. ALL MACH. SURFACES 250 5. DRAWING UNITS: U.S.INCH			APPROVED	E.VILLEGAS	29-APR-2011
			USED ON	ME-486926	
			MATERIAL	SEE PARTS LIST ABOVE	

FERMI NATIONAL ACCELERATOR LABORATORY
UNITED STATES DEPARTMENT OF ENERGY

NOVA-EQUIPMENT HANDLING
ASH RIVER ASSY TABLE
AR SECTION C WELDMENT

SCALE	DRAWING NUMBER	SHEET	REV
1:8 & AS NOTED	3929.220-ME-486989	3 OF 3	

CREATED WITH : Ideas12NXSeries GROUP: PPD/MECHANICAL DEPARTMENT