REV	DESCRIPTION	DRAWN / APPROVED	DATE / DATE

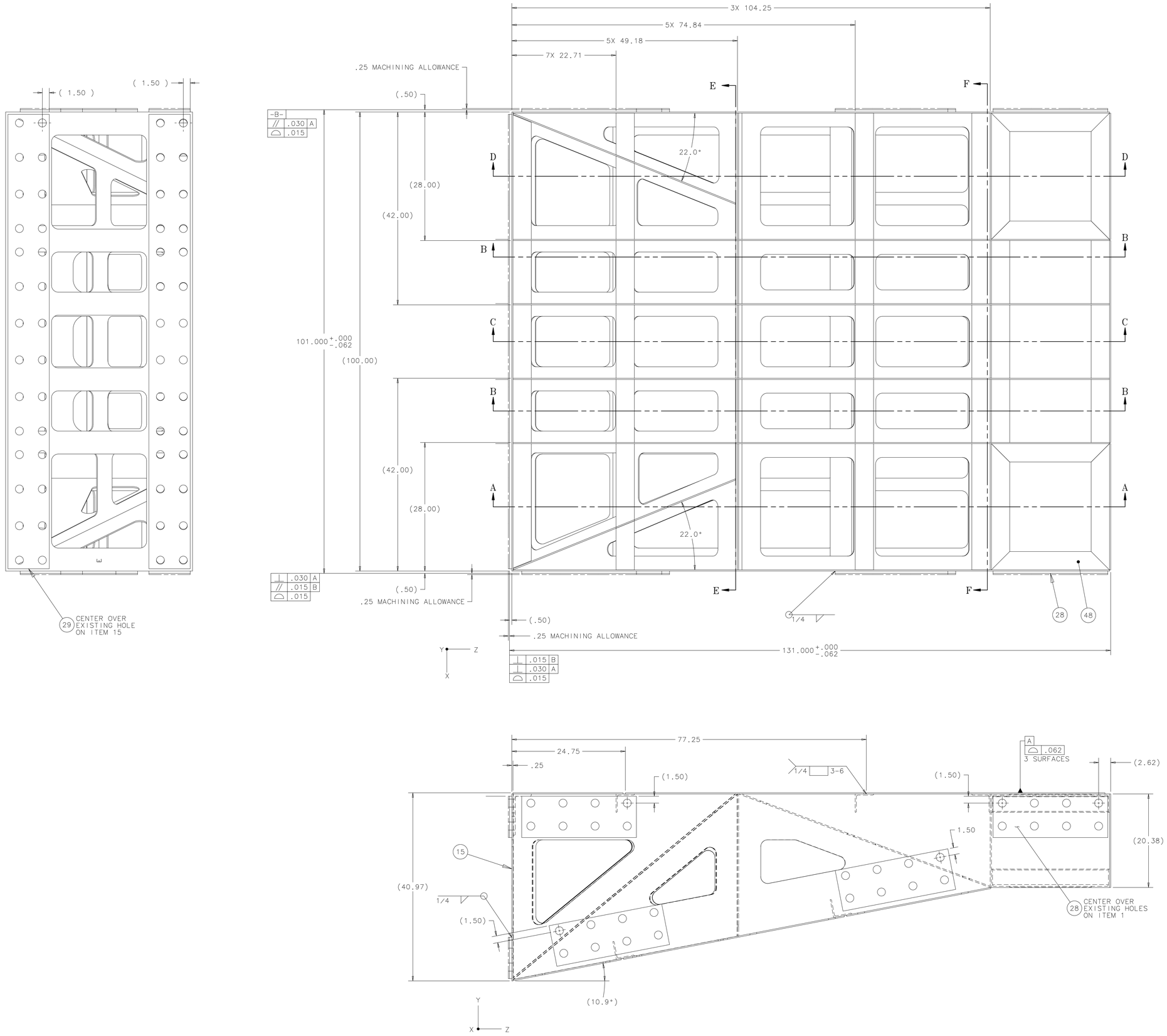

NOTE:

1. UNLESS NOTED, ALL WELD JOINTS ARE TO BE STAGGERED 1/4" FILLET WELDS 3.00" LG. X 6.00" PITCH WITH E70XX OR EQUIVALENT FILLER METAL.
2. ALL WELDING SHALL BE IN ACCORDANCE WITH ANSI/AWS D1.1 "STRUCTURAL WELDING CODE - STEEL".
3. ALL WELDS SHALL BE MADE IN A SEQUENCE THAT WILL BALANCE THE APPLIED WELDING HEAT WHILE THE WELDING PROGRESSES. THE PROCEDURE AND SEQUENCE SHALL BE DESIGNED TO MINIMIZE DISTORTION AND SHRINKAGE STRESSES.
4. ALL WELDS SHALL BE VISUALLY INSPECTED AND DYE PENETRANT INSPECTED TO DETECT SURFACE AND SUBSURFACE CRACKS AND DISCONTINUITIES IN ACCORDANCE WITH ANSI/AWS D1.1 "STRUCTURAL WELDING CODE - STEEL".
5. ALL WELDS THAT FAIL AN INSPECTION SHALL BE REPAIRED IN ACCORDANCE. WITH ANSI/AWS D1.1 "STRUCTURAL WELDING CODE - STEEL".
6. PAINT WITH PRIMER DAMP PROOF RUST-OLEUM NO 769 OR EQUIVALENT.

ITEM	PART NO.	DESCRIPTION OR SIZE	QTY.
48	MC-489065	ANGLE 4X4X250X25.750 45 CUT HOLES	2
47	MB-486939	ANGLE 4X4X250X18-18.44 RT CUT BTM	1
46	MB-486938	ANGLE 4X4X250X18-18.44 LF CUT BTM	1
45	MB-486937	ANGLE 4X4X250X10-682 RT CUT BOTT	1
44	MB-486935	ANGLE 4X4X250X10-682 LFT CUT BOTT	1
43	MC-486533	ANGLE 9X4X500X28-250 RT CUT	1
42	MC-486530	ANGLE 9X4X500X28-250 LFT CUT	1
41	MC-486529	ANGLE 9X4X500X16-0	1
40	MC-486528	ANGLE 9X4X500X13.75 RT CUT	1
39	MC-486525	ANGLE 9X4X500X13-75 LFT CUT	1
38	MC-486524	ANGLE 4X4X250X27-500 45 CUT	8
37	MC-486523	ANGLE 4X4X250X27-500	6
36	MC-486521	ANGLE 4X4X250X25-750 45 CUT	6
35	MC-486520	ANGLE 4X4X250X18-250 RT CUT	1
34	MC-486519	ANGLE 4X4X250X18.42 LFT CUT	1
33	MC-486518	ANGLE 4X4X250X16	9
32	MC-486517	ANGLE 4X4X250X13-750	18
31	MC-486514	ANGLE 4X4X250X10-682 RT CUT	1
30	MC-486513	ANGLE 4X4X250X10-682 LFT CUT	1
29	MC-486507	FLAT PLATE 500X9X99	2
28	MC-486506	FLAT PLATE 500X9X25	8
27	MC-486505	DECK PLATE 250X52X100	2
26	MC-486504	DECK PLATE 250X24X100	1
25	MC-486503	BOTTOM PLATE 250X49X100	1
24	MC-486502	BOTTOM PLATE 250X32X100	1
23	MC-486501	BOTTOM PLATE 250X24X100	1
22	MC-486498	AR SECT. D TRANSV J PLATE	1
21	MC-486496	AR SECT. D TRANSV I PLATE	2
20	MC-486495	AR SECT. D TRANSV H PLATE	1
19	MC-486494	AR SECT. D TRANSV G PLATE	4
18	MC-486493	AR SECT. D TRANSV D PLATE	2
17	MC-486492	AR SECT. D TRANSV C PLATE	2
16	MC-486491	AR SECT. D TRANSV B PLATE	1
15	MC-486489	AR SECT. D TRANSV A PLATE	1
14	MC-486488	AR SECT. D DIAG H PLATE	1
13	MC-486485	AR SECT. D DIAG G PLATE	2
12	MC-486484	AR SECT. D DIAG F PLATE	1
11	MC-486483	AR SECT. D DIAG E PLATE	1
10	MC-486482	AR SECT. D DIAG D PLATE	1
9	MC-486480	AR SECT. D DIAG C PLATE	1
8	MC-486479	AR SECT. D DIAG B PLATE	1
7	MC-486478	AR SECT. D DIAG A PLATE	2
6	MC-486477	AR SECT. D LONGL G PLATE	1
5	MC-486476	AR SECT. D LONGL F PLATE	1
4	MC-468475	AR SECT. D LONGL E PLATE	1
3	MC-486473	AR SECT. D LONGL D PLATE	1
2	MD-486470	AR SECT. D LONGL B PLATE	4
1	MD-486469	AR SECT. D LONGL A PLATE	2

PARTS LIST

UNLESS OTHERWISE SPECIFIED			ORIGINATOR	E.VILLEGAS	07-MAR-2011
.XX	.XXX	ANGLES	DRAWN	W.CYKO	07-MAR-2011
± .06	± ---	± 1°	CHECKED	J.RAUCH	03-MAY-2011
			APPROVED	E.VILLEGAS	03-MAY-2011

1. BREAK ALL SHARP EDGES .015 MAX.
2. DO NOT SCALE DRAWING.
3. DIMENSIONS BASED UPON ASME Y14.5M-1994
4. MAX. ALL MACH. SURFACES 250
5. DRAWING UNITS: US INCHES

USED ON: ME-486926 & ME-486927

MATERIAL: SEE PARTS LIST ABOVE

FERMI NATIONAL ACCELERATOR LABORATORY
UNITED STATES DEPARTMENT OF ENERGY

NOVA-EQUIPMENT HANDLING ASH RIVER ASSEMBLY TABLE AR SECTION D WELDMENT

SCALE	DRAWING NUMBER	SHEET	REV
1:8 AS NOTED	3929.220-ME-486941	1 OF 3	

CREATED WITH : Ideas12NXSeries GROUP: PPD/MECHANICAL DEPARTMENT

REV	DESCRIPTION	DRAWN	DATE
		APPROVED	DATE

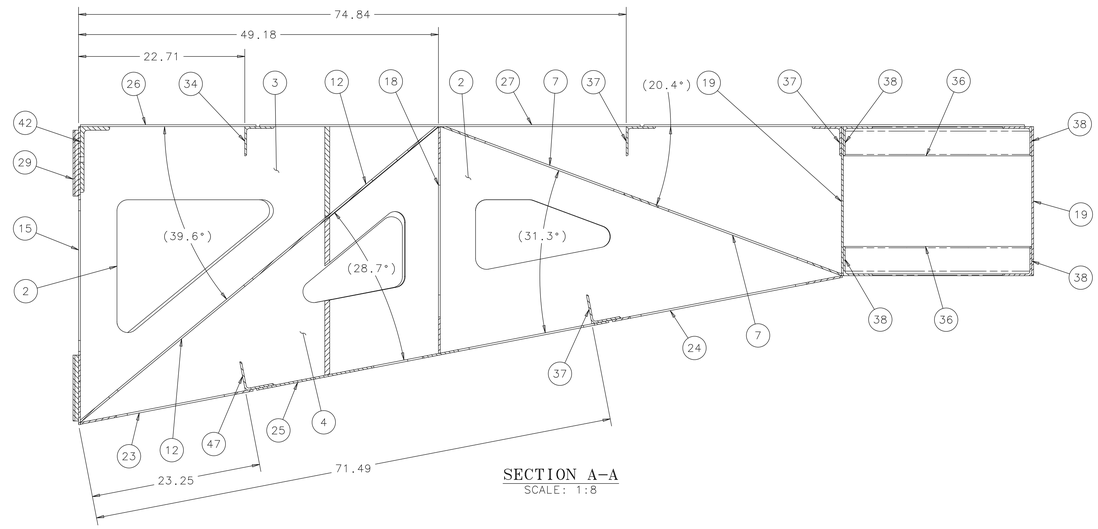

SECTION A-A
SCALE: 1:8

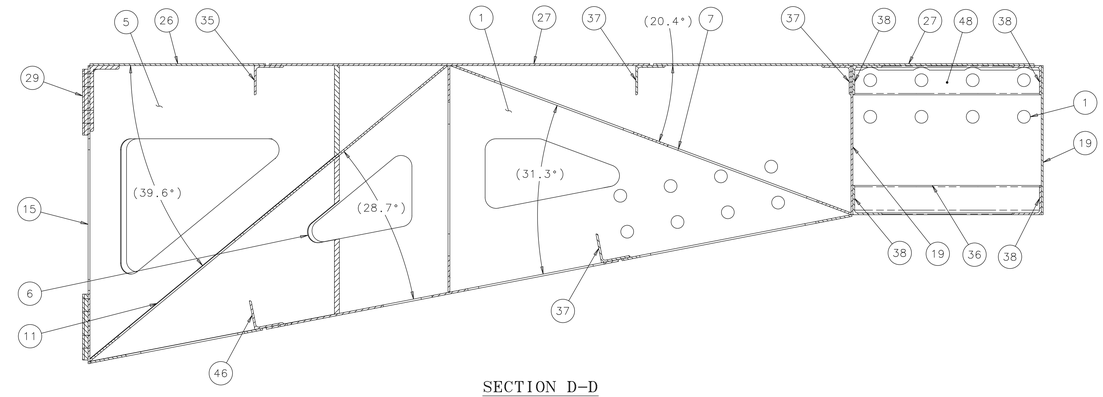

SECTION D-D
SCALE: 1:8

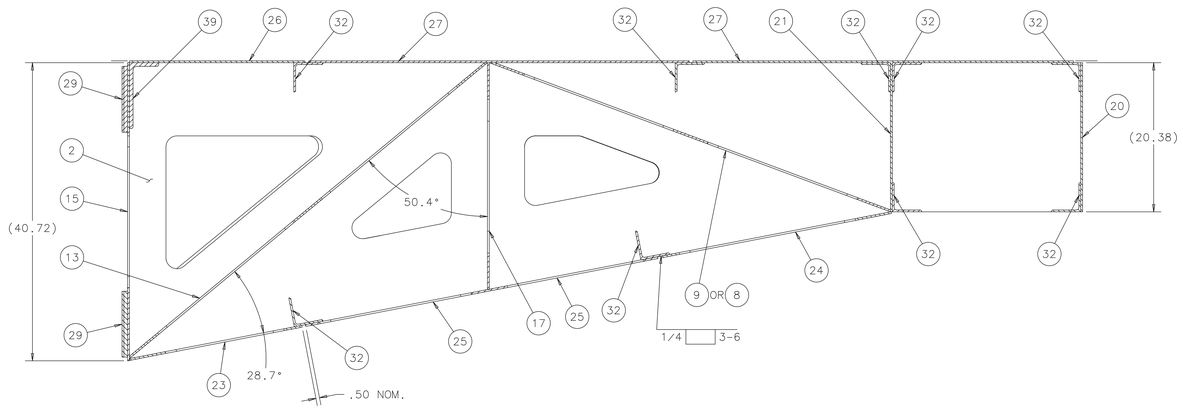

SECTION B-B
SCALE: 1/8

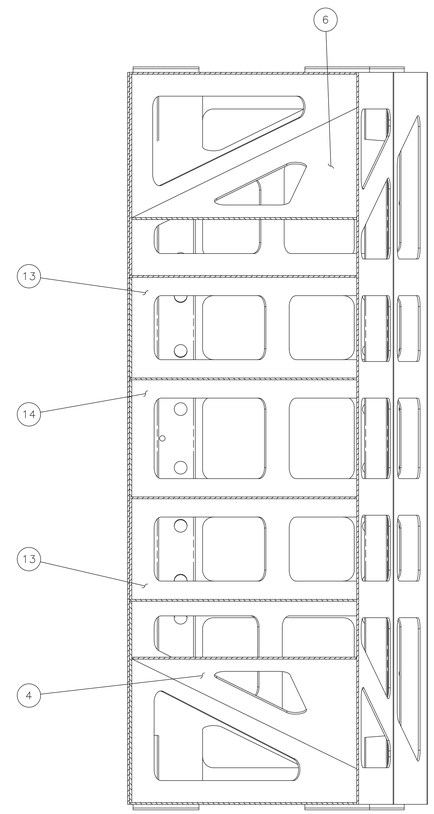

SECTION E-E
SCALE: 1/8

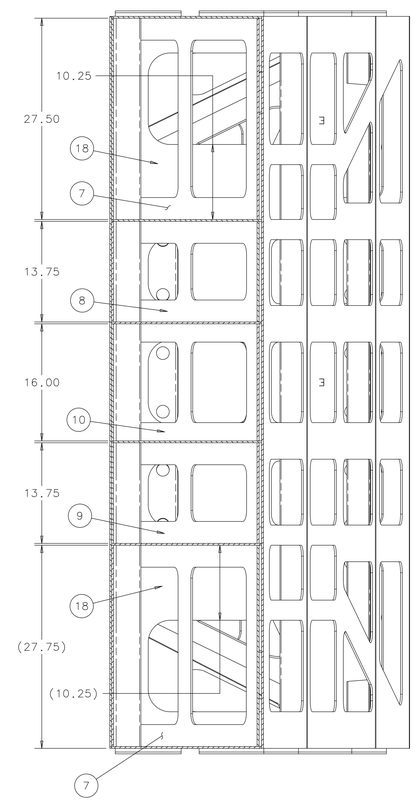

SECTION F-F
SCALE: 1/8

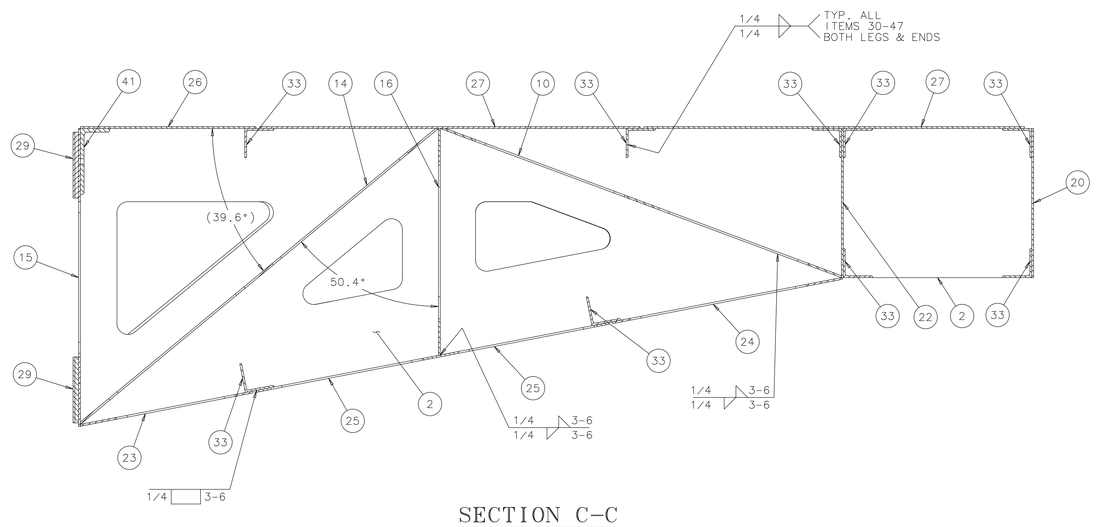

SECTION C-C
SCALE: 1/8

UNLESS OTHERWISE SPECIFIED			ORIGINATOR	E.VILLEGAS	07-MAR-2011
.XX	.XXX	ANGLES	DRAWN	W.CYKO	07-MAR-2011
± .06	± ---	± 1°	CHECKED	J.RAUCH	03-MAY-2011
1. BREAK ALL SHARP EDGES .015 MAX. 2. DO NOT SCALE DRAWING. 3. DIMENSIONS BASED UPON ASME Y14.5M-1994 4. MAX. ALL MACH. SURFACES 250 5. DRAWING UNITS: US INCHES			APPROVED	E.VILLEGAS	03-MAY-2011
			USED ON	ME-486926 & ME-486927	
			MATERIAL	SEE PARTS LIST ABOVE	

FERMI NATIONAL ACCELERATOR LABORATORY
UNITED STATES DEPARTMENT OF ENERGY

NOVA-EQUIPMENT HANDLING
ASH RIVER ASSEMBLY TABLE
AR SECTION D WELDMENT

SCALE	DRAWING NUMBER	SHEET	REV
1:8 AS NOTED	3929.220-ME-486941	2 OF 3	

CREATED WITH : Ideas12NXSeries GROUP: PPD/MECHANICAL DEPARTMENT

REV	DESCRIPTION	DRAWN	DATE
		APPROVED	DATE

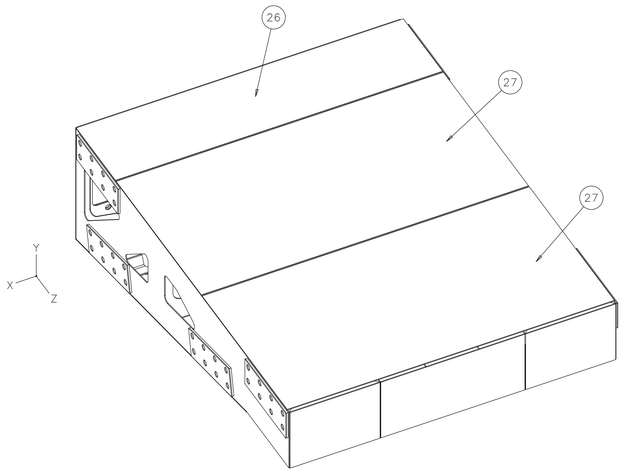

TOP ISO 1
SCALE: 1/16

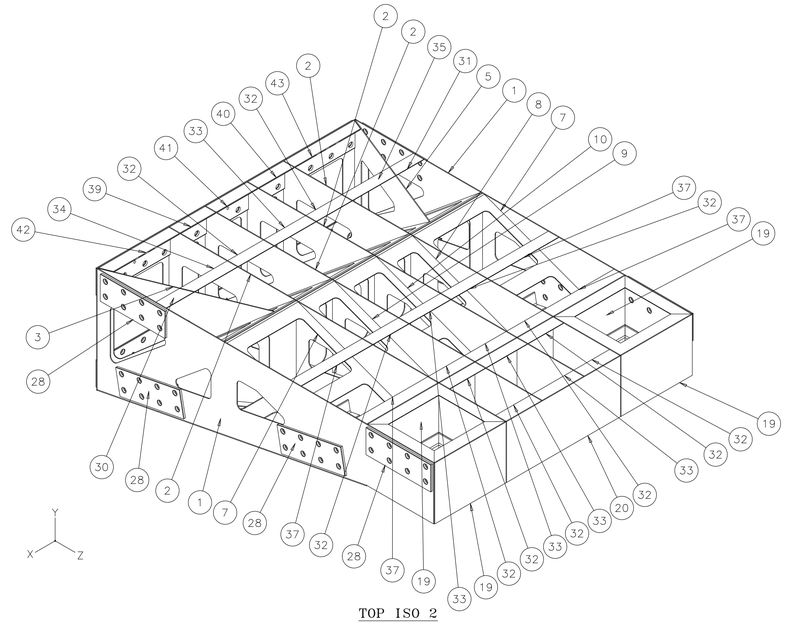

TOP ISO 2
SCALE: 1/16

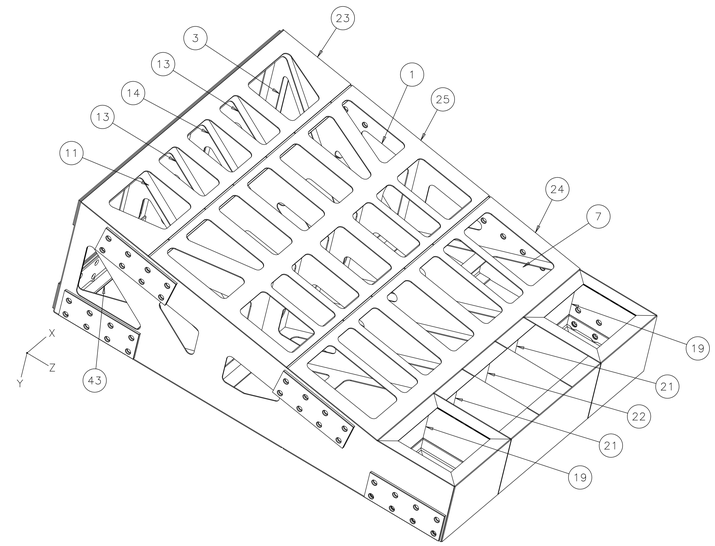

BOTTOM ISO 2
SCALE: 1/16

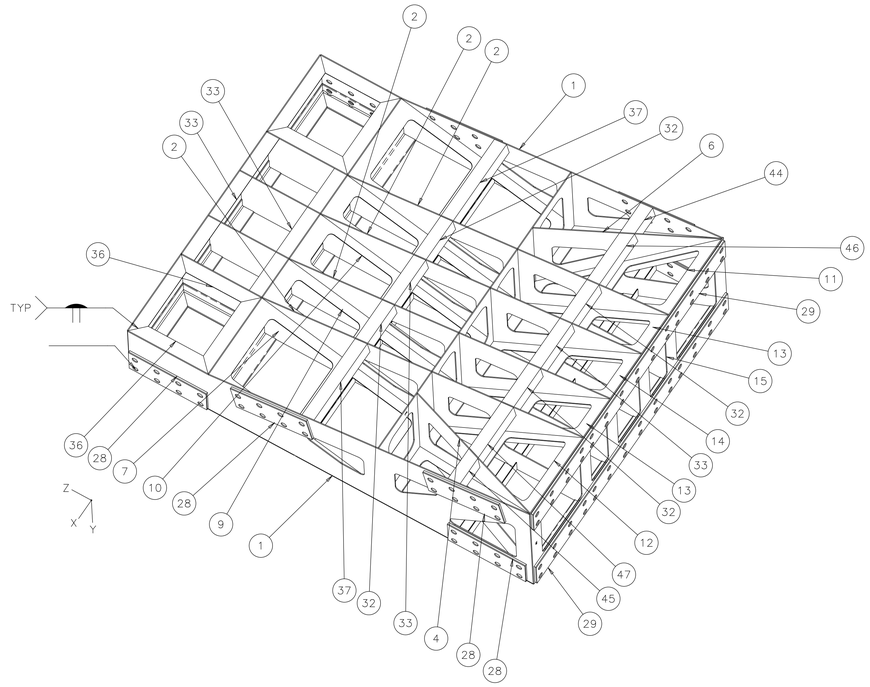

BOTTOM ISO 1
SCALE: 1/16

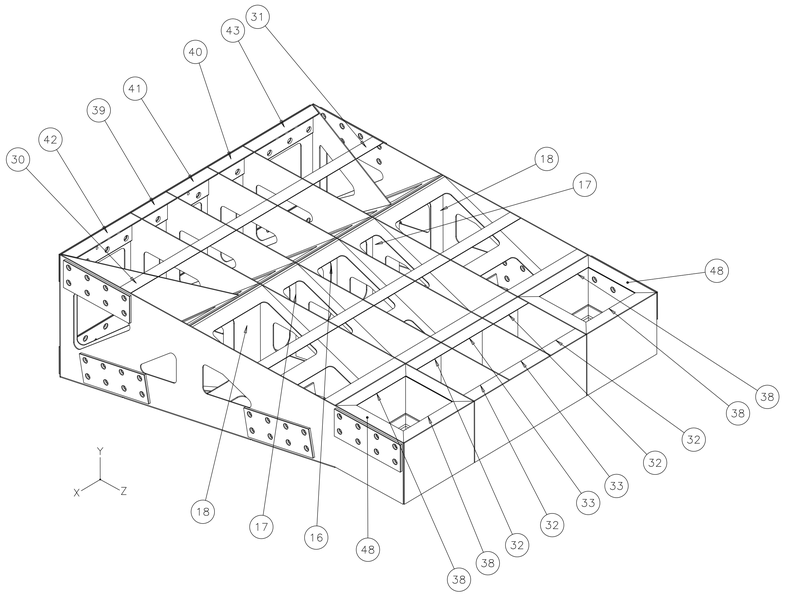

TOP ISO 3
SCALE: 1/16

UNLESS OTHERWISE SPECIFIED			ORIGINATOR	E.VILLEGAS	07-MAR-2011
.XX	.XXX	ANGLES	DRAWN	W.CYKO	07-MAR-2011
± .06	± ---	± 1°	CHECKED	J.RAUCH	03-MAY-2011
1. BREAK ALL SHARP EDGES .015 MAX. 2. DO NOT SCALE DRAWING. 3. DIMENSIONS BASED UPON ASME Y14.5M-1994 4. MAX. ALL MACH. SURFACES 250 5. DRAWING UNITS: US INCHES			APPROVED	E.VILLEGAS	03-MAY-2011
			USED ON	ME-486926 & ME-486927	
			MATERIAL	SEE PARTS LIST ABOVE	

FERMI NATIONAL ACCELERATOR LABORATORY
UNITED STATES DEPARTMENT OF ENERGY

NOVA-EQUIPMENT HANDLING ASH RIVER ASSEMBLY TABLE AR SECTION D WELDMENT

SCALE	DRAWING NUMBER	SHEET	REV
1:8 AS NOTED	3929.220-ME-486941	3 OF 3	

CREATED WITH : Ideas12NXSeries GROUP: PPD/MECHANICAL DEPARTMENT