REV	DESCRIPTION	DRAWN	DATE
		APPROVED	DATE

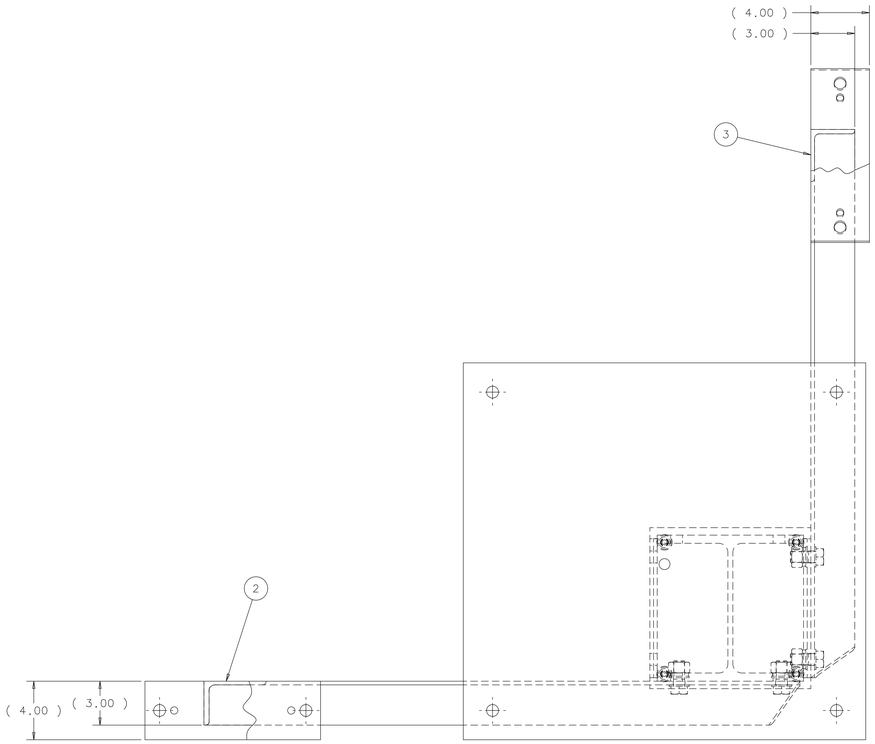

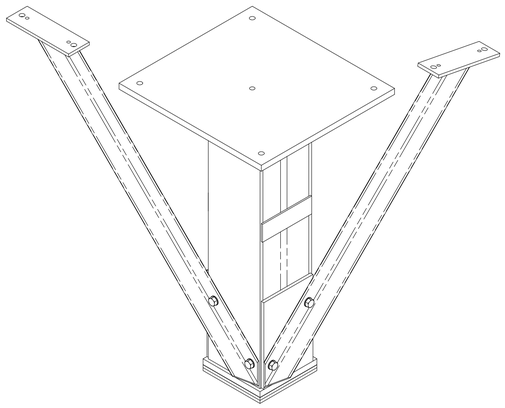

ISOMETRIC VIEW
SCALE=1:8

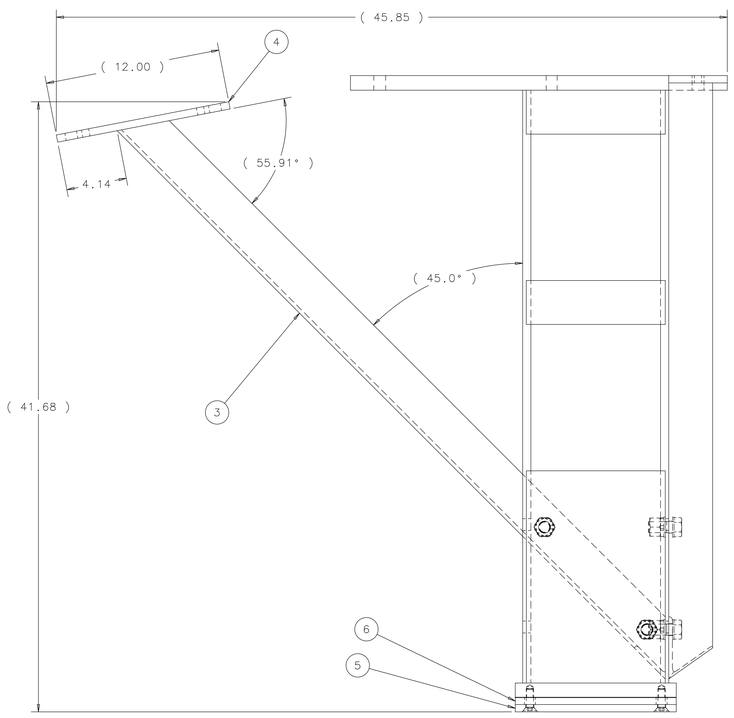

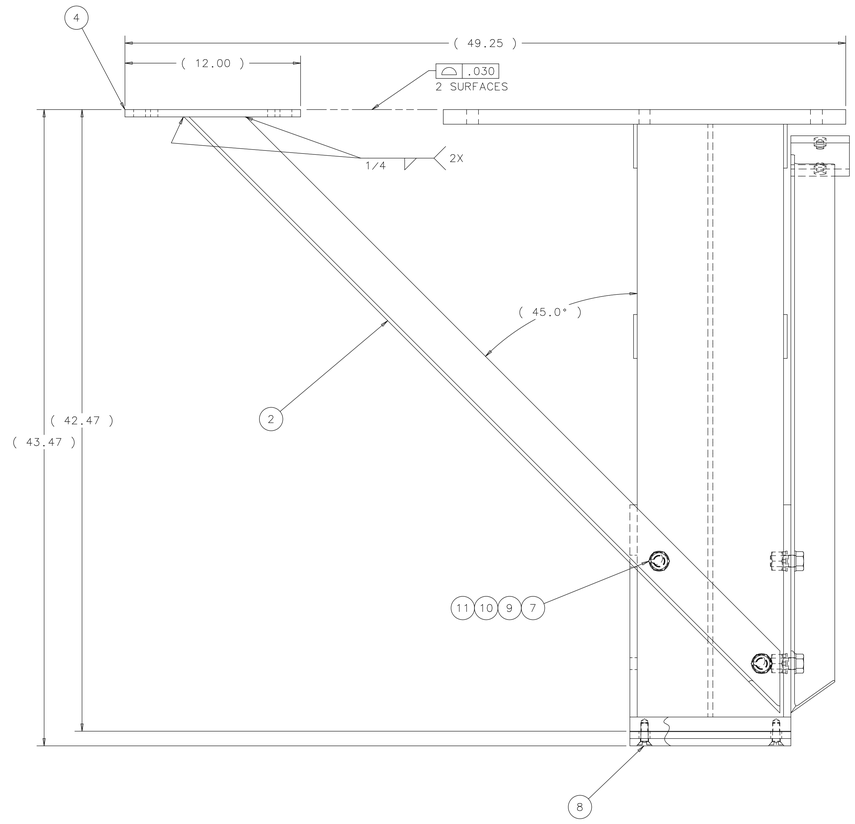

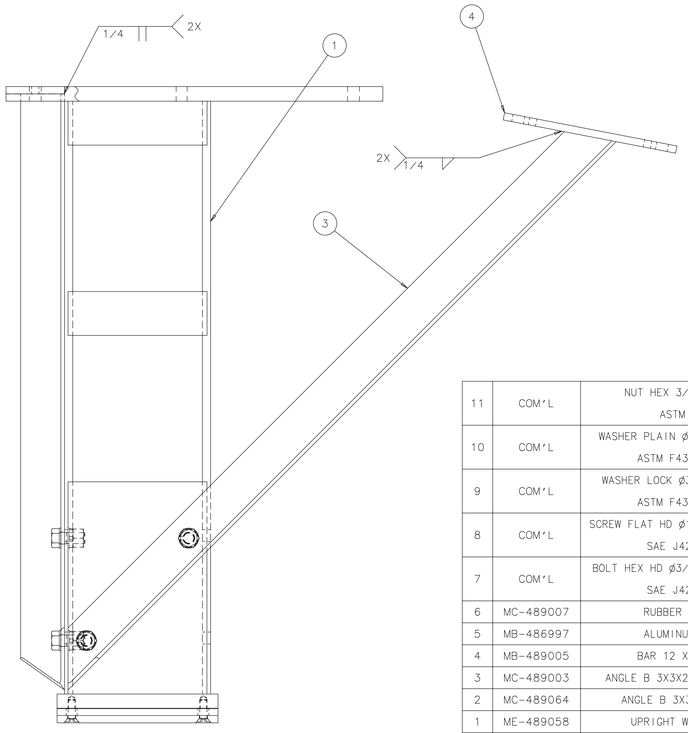

ITEM	PART NO.	DESCRIPTION OR SIZE	QTY.
11	COM'L	NUT HEX 3/4--10 GR 8 ASTM A194	4
10	COM'L	WASHER PLAIN ø3/4 X 1 3/8 OD ASTM F436 TYPE 3	8
9	COM'L	WASHER LOCK ø3/4 X 1 3/8 OD ASTM F436 TYPE 3	4
8	COM'L	SCREW FLAT HD ø1/2-13 X 1 14 LG SAE J429 GR 8	4
7	COM'L	BOLT HEX HD ø3/4-10 X 1 3/4 LG SAE J429 GR 8	4
6	MC-489007	RUBBER PAD 60A	1
5	MB-486997	ALUMINUM PLATE	1
4	MB-489005	BAR 12 X 4 X 1/2	2
3	MC-489003	ANGLE B 3X3X250X53-00 B DS	1
2	MC-489064	ANGLE B 3X3X250X59-40	1
1	ME-489058	UPRIGHT WLDNT B DS	1

PARTS LIST

UNLESS OTHERWISE SPECIFIED			ORIGINATOR	E.VILLEGAS	03-MAR-2011
.XX	.XXX	ANGLES	DRAWN	J.MATESKI	03-MAR-2011
± .03	± ---	± ---	CHECKED	B.ELLISON	03-MAY-2011
			APPROVED	E.VILLEGAS	03-MAY-2011

1. BREAK ALL SHARP EDGES .031 MAX.
2. DO NOT SCALE DRAWING.
3. DIMENSIONS BASED UPON ASME Y14.5M-1994
4. MAX. ALL MACH. SURFACES 250
5. DRAWING UNITS: U.S.INCH

USED ON: ME-486924

MATERIAL: SEE PARTS LIST ABOVE

EST. WT. 540.13 LBS

NOTICE: IMAGE OBTAINED FROM FERMILAB WEB SITE

This information is provided for REFERENCE use only. Not for MANUFACTURE, or DESIGN INFORMATION. All information contained in this document represents work sponsored by an agency of the U.S. Government. Neither the U.S. Government nor any agency thereof, nor Universities Research Association, Inc., nor any of their employees or officers, makes any warranty, express or implied, or assumes any legal liability or responsibility for the accuracy, completeness, or usefulness of any information, apparatus, product or process disclosed, or represents that its use would not infringe privately owned rights.

FERMI NATIONAL ACCELERATOR LABORATORY
UNITED STATES DEPARTMENT OF ENERGY

NOVA-EQUIPMENT HANDLING
NOVA PIVOTER
DUNNAGE SPACER WLDNT B DS

SCALE	DRAWING NUMBER	SHEET	REV
1:4 & NOTED	3929.220-ME-486931	1 OF 1	

CREATED WITH : Ideas12NXSeries GROUP: PPD/MECHANICAL DEPARTMENT