REV	DESCRIPTION	DRAWN	DATE
		APPROVED	DATE

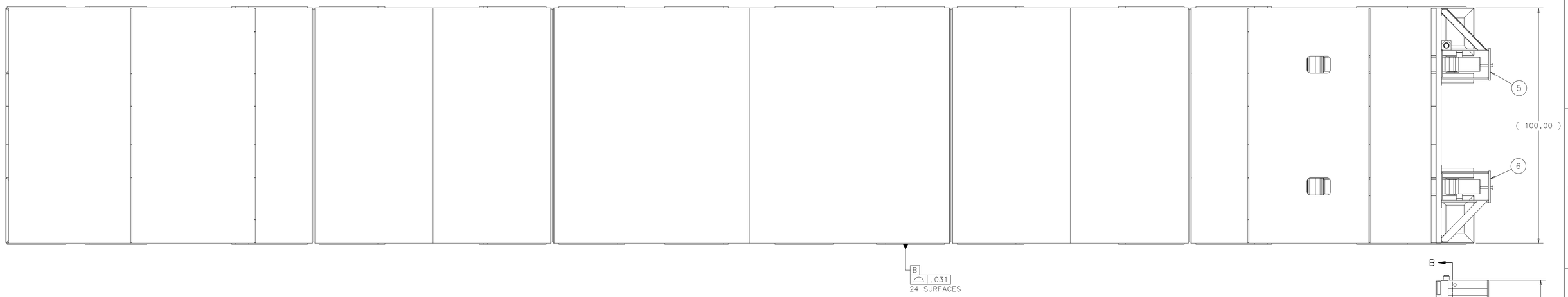

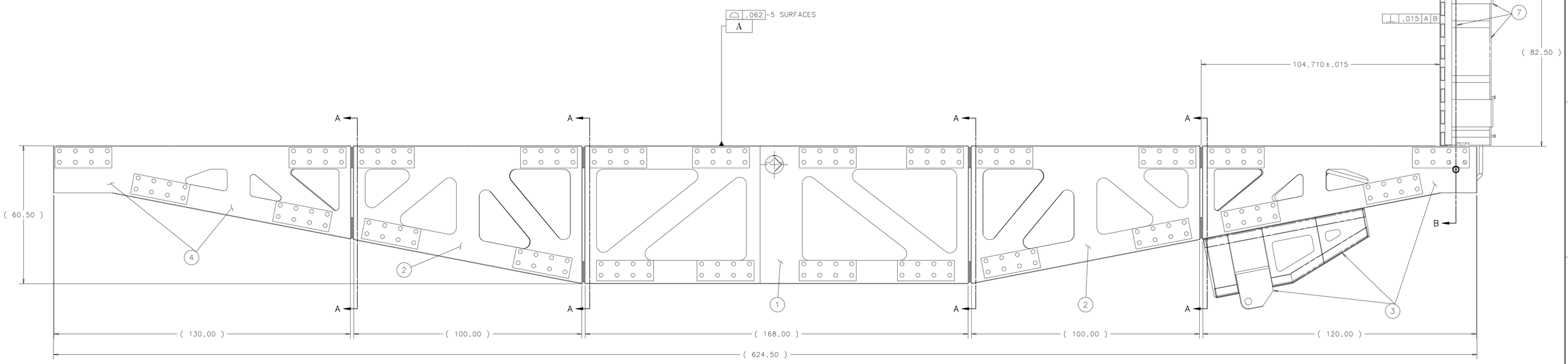

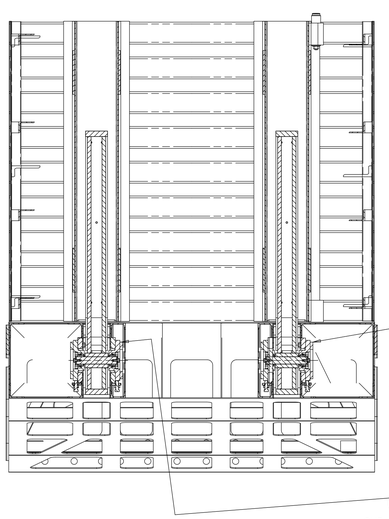

SECTION VIEW B-B

SCALE=.06:1

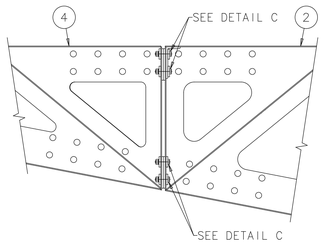

DETAIL OF BOLTS - SECT. B-D

OUTER FRONT & REINFORCING PLATES NOT SHOWN FOR CLARITY

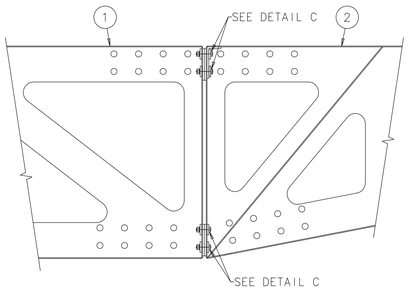

DETAIL OF BOLTS - SECT. A-B

TYPICAL FOR BOTH ENDS

OUTER FRONT & REINFORCING PLATES NOT SHOWN FOR CLARITY

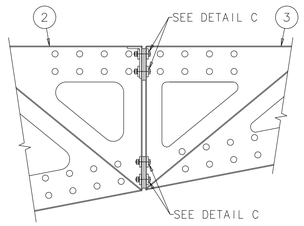

DETAIL OF BOLTS - SECT. B-C

OUTER FRONT & REINFORCING PLATES NOT SHOWN FOR CLARITY

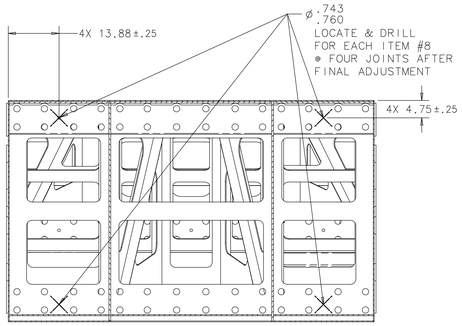

SECTION A-A

TYP. - 4 LOCATIONS

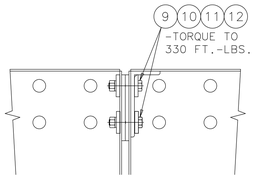

DETAIL C - FASTENERS

TYPICAL AT EACH JOINT

AS SHOWN IN DETAILS

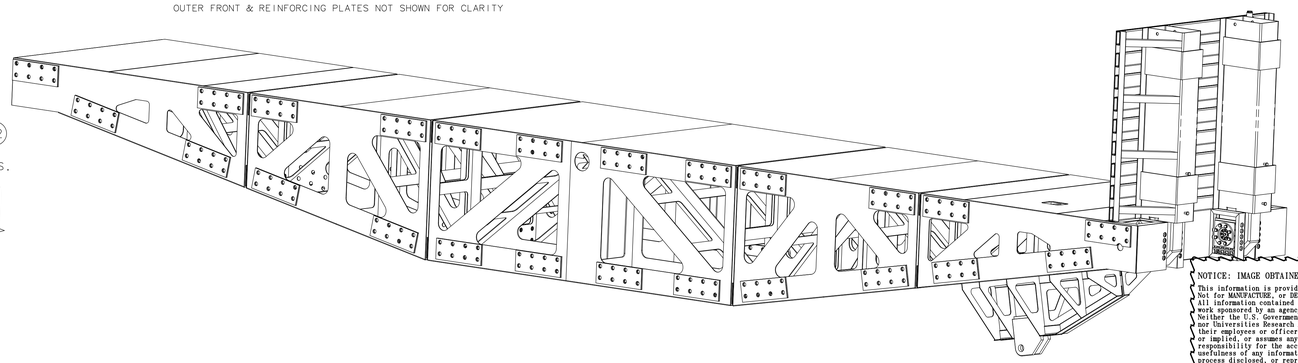

EST. WEIGHT = 37,125 LBS.

ITEM	PART NO.	DESCRIPTION OR SIZE	QTY.
12	COML	HEX NUT, #3/4-10 UNC, GRADE 8	224
11	COML	WASHER, SPECIAL, #3/4 SCREW SIZE x 3.00 OD x .500 THK.	448
10	COML	WASHER, LOCK, 3/4 SCREW SIZE, SST	224
9	COML	SCREW, HEX HD. CAP, #3/4-10 UNC x 4.00 LG., Gr.8	224
8	95755A880	SPRING PIN, ø.75 x 3.00 LG., HEAVY DUTY, STEEL, McMASTER-CARR	16
7	MD-486995	PALLET PIVOT SEGMENT	1
6	MD-486907	FORK ASSEMBLY, LEFT	1
5	MD-486906	FORK ASSEMBLY, RIGHT	1
4	ME-486941	SECTION D WELDMENT	1
3	ME-486921	PIVOT SECTION C WELDMENT	1
2	ME-486827	SECTION B WELDMENT	2
1	ME-489035	SECTION A PIVOT WELDMENT	1

PARTS LIST

UNLESS OTHERWISE SPECIFIED			ORIGINATOR	E.VILLEGAS	03-MAR-2011
.XX	.XXX	ANGLES	DRAWN	J.MATESKI	03-MAR-2011
± ---	± ---	± ---	CHECKED	J.RAUCH	03-MAY-2011
1. BREAK ALL SHARP EDGES .005 - .015 MAX.			APPROVED	E.VILLEGAS	03-MAY-2011
2. DO NOT SCALE DRAWING. 3. DIMENSIONS BASED UPON ASME Y14.5M-1994 4. MAX. ALL MACH. SURFACES			USED ON	ME-486924	
5. DRAWING UNITS: U.S. INCH			MATERIAL	SEE PARTS LIST ABOVE	

FERMI NATIONAL ACCELERATOR LABORATORY
UNITED STATES DEPARTMENT OF ENERGY

NOVA-EQUIPMENT HANDLING SUPPORT EQUIPMENT AR TABLE PIVOT MODULE

SCALE	DRAWING NUMBER	SHEET	REV
1/2"=1'	3929.200-ME-486927	1 OF 1	

CREATED WITH : Ideas12NXSeries GROUP: PPD/MECHANICAL DEPARTMENT

NOTICE: IMAGE OBTAINED FROM FERMILAB WEB SITE

This information is provided for REFERENCE use only. Not for MANUFACTURE, or DESIGN INFORMATION. All information contained in this document represents work sponsored by an agency of the U.S. Government. Neither the U.S. Government nor any agency thereof, nor Universities Research Association, Inc., nor any of their employees or officers, makes any warranty, express or implied, or assumes any legal liability or responsibility for the accuracy, completeness, or usefulness of any information, apparatus, product or process disclosed, or represents that its use would not infringe privately owned rights.