REV	DESCRIPTION	DRAWN	DATE
		APPROVED	DATE

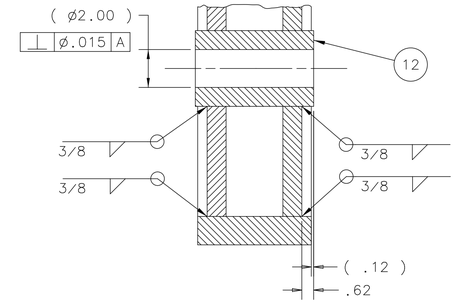

DETAIL B
SCALE 1:4

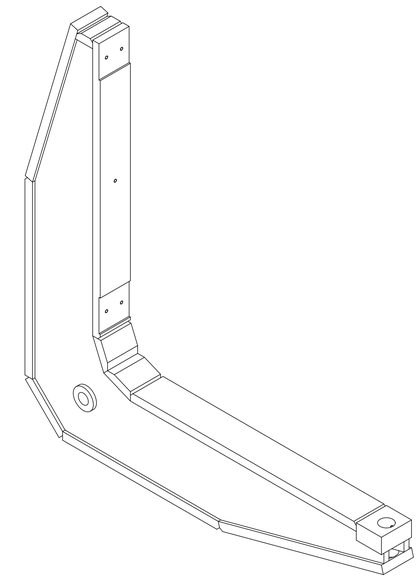

ISOMETRIC VIEW

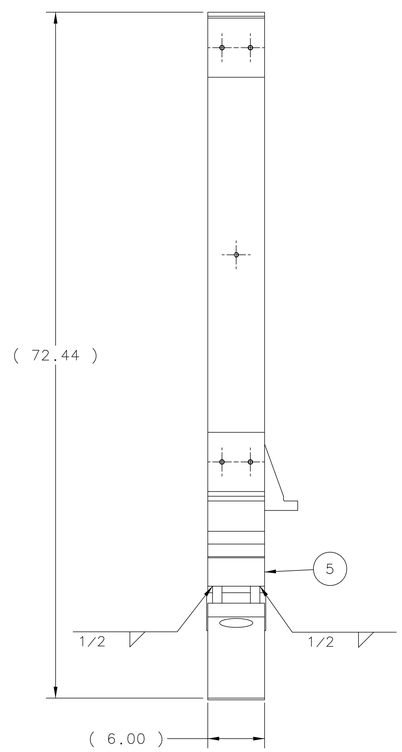

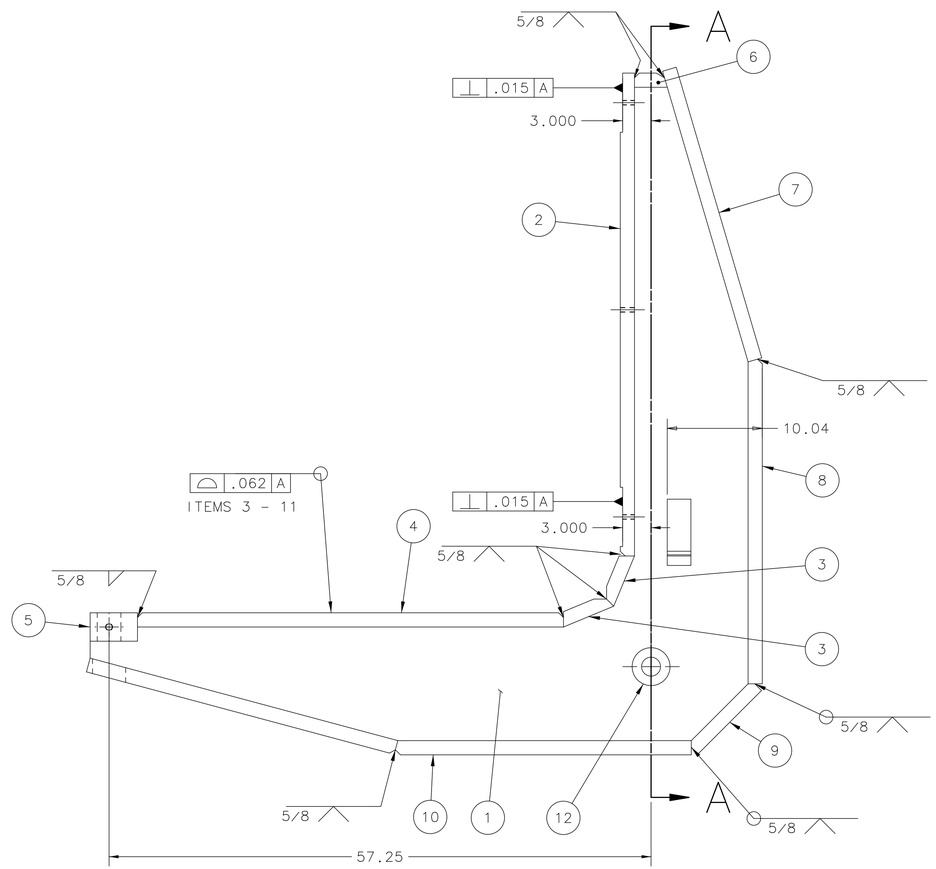

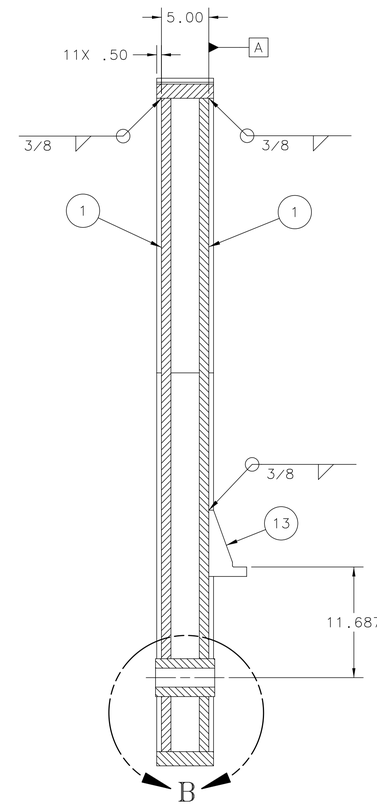

SECTION A-A

ITEM	PART NO.	DESCRIPTION OR SIZE	QTY.
13	MB-486834	PALLET STOP	1
12	MB-486794	FORK PIVOT SHAFT	1
11	MB-486828	FORK PLATE K	1
10	MB-486826	FORK PLATE J	1
9	MB-486824	FORK PLATE I	1
8	MB-486823	FORK PLATE H	1
7	MB-486822	FORK PLATE G	1
6	MB-486815	FORK PLATE F	1
5	MB-486813	FORK PLATE E	1
4	MB-486810	FORK PLATE D	1
3	MB-486808	FORK PLATE C	2
2	MC-486807	FORK PLATE B	1
1	MC-486797	FORK PLATE A	2

PARTS LIST

UNLESS OTHERWISE SPECIFIED			ORIGINATOR	E.VILLEGAS	21-DEC-2010
.XX	.XXX	ANGLES	DRAWN	S.KINDELBERGER	09-FEB-2011
± .03	± .010	± ---	CHECKED	J.RAUCH	29-APR-2011
			APPROVED	E.VILLEGAS	29-APR-2011

1. BREAK ALL SHARP EDGES .015 MAX.
2. DO NOT SCALE DRAWING.
3. DIMENSIONS BASED UPON ASME Y14.5M-1994
4. MAX. ALL MACH. SURFACES 250
5. DRAWING UNITS: U.S. INCH

USED ON: MD-486907

MATERIAL: SEE PARTS LIST ABOVE

FERMI NATIONAL ACCELERATOR LABORATORY
UNITED STATES DEPARTMENT OF ENERGY

NOVA-EQUIPMENT HANDLING ASH RIVER ASSY TABLE PALLET FORK LEFT WELDMENT

SCALE	DRAWING NUMBER	SHEET	REV
1:8	9219.220-MD-486869	1 OF 1	

CREATED WITH : Ideas12NXSeries | GROUP: PPD/MECHANICAL DEPARTMENT

NOTES:

1. ALL WELDS TO BE E700XX OR EQUIVALENT.
2. ALL WELDING SHALL BE IN ACCORDANCE WITH ANSI/AWS D1.1, "STRUCTURAL WELDING CODE - STEEL"
3. ALL WELDS SHALL BE MADE IN A SEQUENCE THAT WILL BALANCE THE APPLIED WELDING HEAT WHILE THE WELDING PROGRESSES. THE PROCEDURE AND SEQUENCE SHALL BE DESIGNED TO MINMIZE DISTORTION AND SHRINKAGE STRESSES.
4. ALL WELDS SHALL BE VISUALLY INSPECTED AND DYE PENETRANT INSPECTED TO DETECT SURFACE AND SUBSURFACE CRACKS AND DISCONTINUITIES IN ACCORDANCE WITH ANSI.AWS D1.1, "STRUCTURAL WELDING CODE - STEEL".
5. ALL WELDS THAT FAIL AN INSPECTION SHALL BE REPAIRED IN ACCORDANCE WITH ANSI/AWS D1.1, "STRUCTUAL WELDING CODE - STEEL".
6. PAINT WITH PRIMER, DAMP PROOF RUST-OLEUM NO. 769.

NOTICE: IMAGE OBTAINED FROM FERMILAB WEB SITE

This information is provided for REFERENCE use only. Not for MANUFACTURE, or DESIGN INFORMATION. All information contained in this document represents work sponsored by an agency of the U.S. Government. Neither the U.S. Government nor any agency thereof, nor Universities Research Association, Inc., nor any of their employees or officers, makes any warranty, express or implied, or assumes any legal liability or responsibility for the accuracy, completeness, or usefulness of any information, apparatus, product or process disclosed, or represents that its use would not infringe privately owned rights.