| REV | DESCRIPTION | DRAWN | DATE |
|---|---|---|---|
| | | APPROVED | DATE |

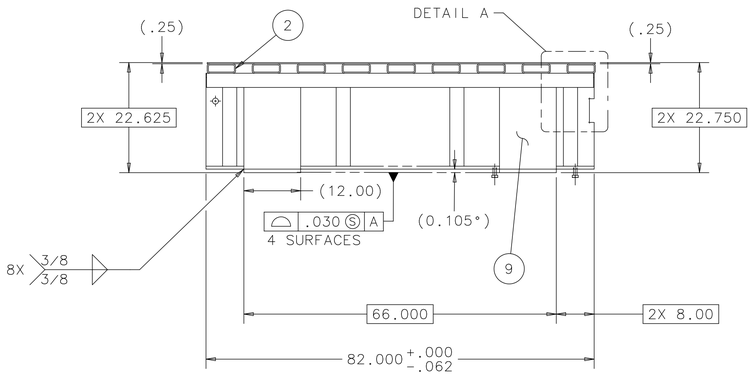


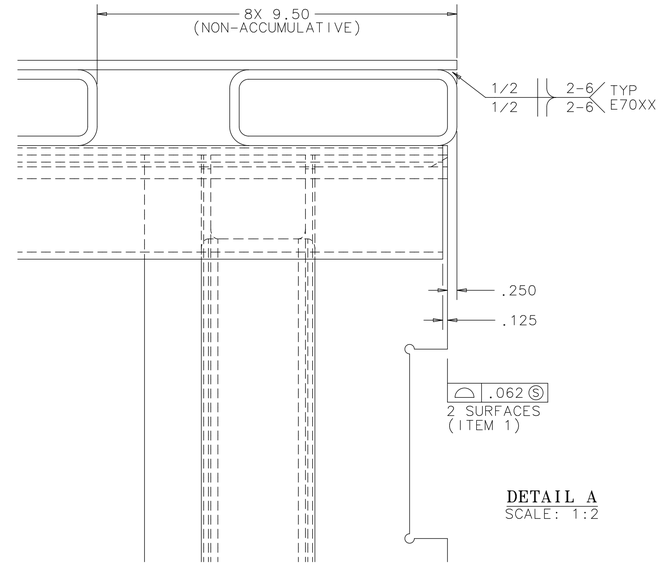


DETAIL A
SCALE: 1:2

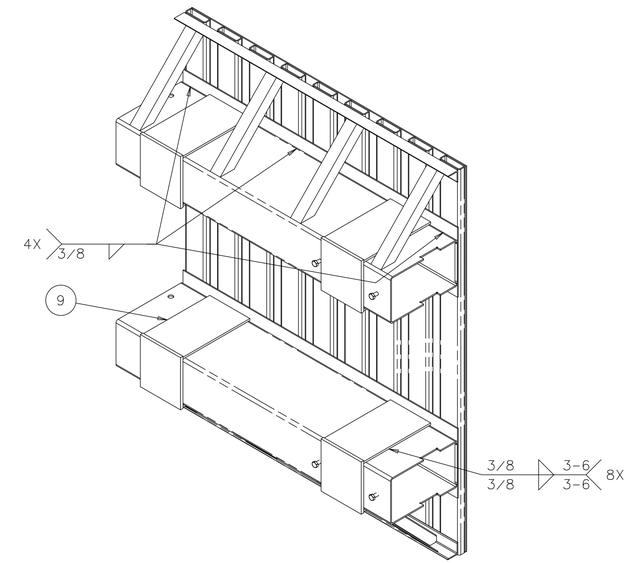


ISOMETRIC VIEW

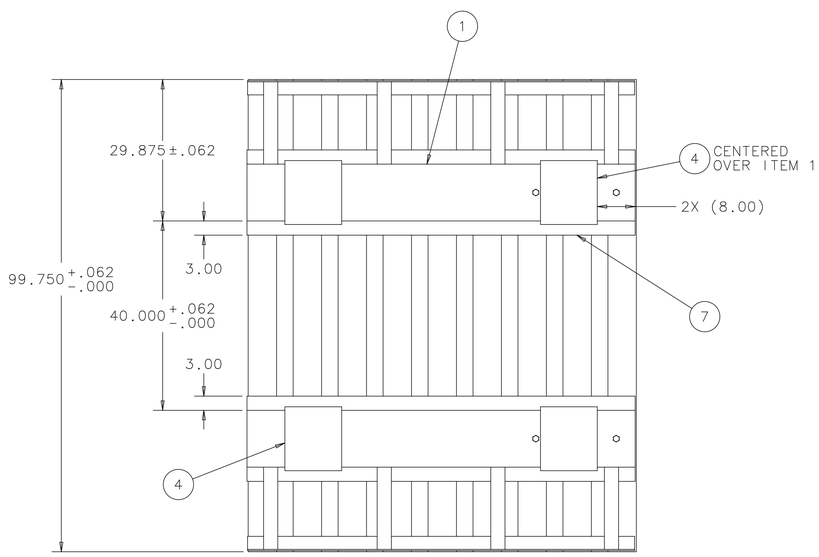


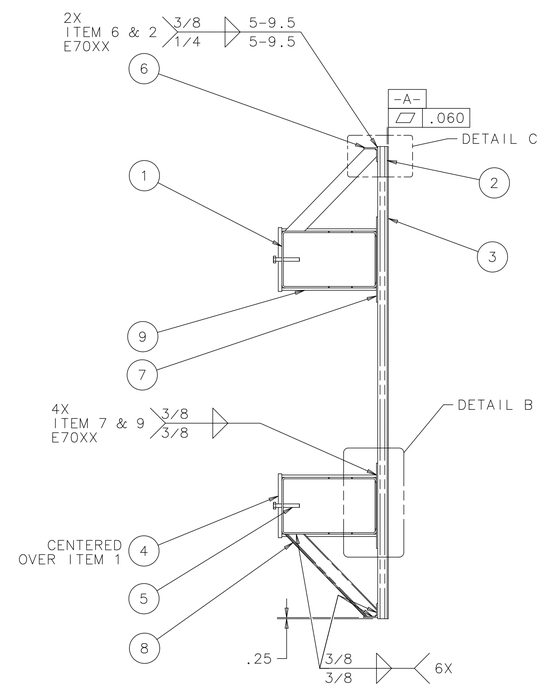


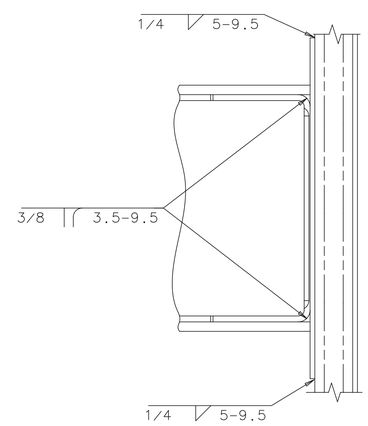


DETAIL B
SCALE: 1:4

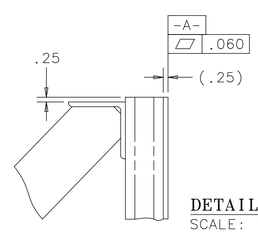


DETAIL C
SCALE: 1:4

EST WT.=3153 LBS

| ITEM | PART NO. | DESCRIPTION OR SIZE | QTY. |
|---|---|---|---|
| 9 | COML | PLATE, 12.00 X 19.94 +.00/-.06 X .50 THK. ASTM A 36 STL. | 8 |
| 8 | MB-489066 | ANGLE, MOD 3 X 3 X 1/4 X 26 LG | 8 |
| 7 | COML | PLATE, 18.00 X 82.00 X 1/4 THK. STEEL ASTM A36 | 2 |
| 6 | COML | ANGLE, 3 X 3 X 1/4 THK. 81.75 LG ASTM A 36 STL. | 4 |
| 5 | COML | SCREW, HX HD. 3/4-10 UNC X 5.00 LG. ZINC COATED STL, FULLY THREADED | 4 |
| 4 | COML | PLATE, 12.00 X 13.50 X .75 THK. ASTM A 36 STL. | 4 |
| 3 | COML | PLATE, 99.75 X 82.00 X .25 THK. ASTM A 36 STL. | 1 |
| 2 | COML | TUBE, 6.00 X 2.00 X .25 WALL X 99.75 LG. ASTM A 500 GR B STL. | 9 |
| 1 | MD-486966 | TUBING STRUCTURAL 20X12X625X82.00 | 2 |

PARTS LIST

NOTES:

1. ALL WELDS TO BE E70XX OR EQUIVALENT.
2. ALL WELDING SHALL BE IN ACCORDANCE WITH ANSI/AWS D1.1, "STRUCTURAL WELDING CODE - STEEL"
3. ALL WELDS SHALL BE MADE IN A SEQUENCE THAT WILL BALANCE THE APPLIED WELDING HEAT WHILE THE WELDING PROGRESSES. THE PROCEDURE AND SEQUENCE SHALL BE DESIGNED TO MINIMIZE DISTORTION AND SHRINKAGE STRESSES.
4. ALL WELDS SHALL BE VISUALLY INSPECTED AND DYE PENETRANT INSPECTED TO DETECT SURFACE AND SUBSURFACE CRACKS AND DISCONTINUITES IN ACCORDANCE WITH ANSI/AWS D1.1, "STRUCTURAL WELDING CODE - STEEL".
5. ALL WELDS THAT FAIL AN INSPECTION SHALL BE REPAIRED IN ACCORDANCE WITH ANSI/AWS D1.1, "STRUCTURAL WELDING CODE - STEEL".
6. PAINT WITH PRIMER, DAMP PROOF RUST-OLEUM NO 769.

| UNLESS OTHERWISE SPECIFIED | | | ORIGINATOR | E.VILLEGAS | 01-FEB-2011 |
|---|---|---|---|---|---|
| .XX | .XXX | ANGLES | DRAWN | V.MAJDANSKI | 01-FEB-2011 |
| ± .03 | ± .015 | ± --- | CHECKED | J.RAUCH | 04-MAY-2011 |
| | | | APPROVED | E.VILLEGAS | 04-MAY-2011 |

1. BREAK ALL SHARP EDGES .015 MAX.
2. DO NOT SCALE DRAWING.
3. DIMENSIONS BASED UPON ASME Y14.5M-1994
4. MAX. ALL MACH. SURFACES 250
5. DRAWING UNITS: U.S.INCH

USED ON: ME-486926

MATERIAL: SEE PARTS LIST ABOVE

FERMI NATIONAL ACCELERATOR LABORATORY
UNITED STATES DEPARTMENT OF ENERGY

# NOVA-EQUIPMENT HANDLING AR TABLE PIVOT MODULE AR PALLET SEGMENT

| SCALE | DRAWING NUMBER | SHEET | REV |
|---|---|---|---|
| 1:16 & AS NOTED | 3929.220-MD-486833 | 1 OF 1 | |

CREATED WITH : Ideas12NXSeries | GROUP: PPD/MECHANICAL DEPARTMENT


NOTICE: IMAGE OBTAINED FROM FERMILAB WEB SITE

This information is provided for REFERENCE use only. Not for MANUFACTURE, or DESIGN INFORMATION. All information contained in this document represents work sponsored by an agency of the U.S. Government. Neither the U.S. Government nor any agency thereof, nor Universities Research Association, Inc., nor any of their employees or officers, makes any warranty, express or implied, or assumes any legal liability or responsibility for the accuracy, completeness, or usefulness of any information, apparatus, product or process disclosed, or represents that its use would not infringe privately owned rights.