REV	DESCRIPTION	DRAWN	DATE
		APPROVED	DATE

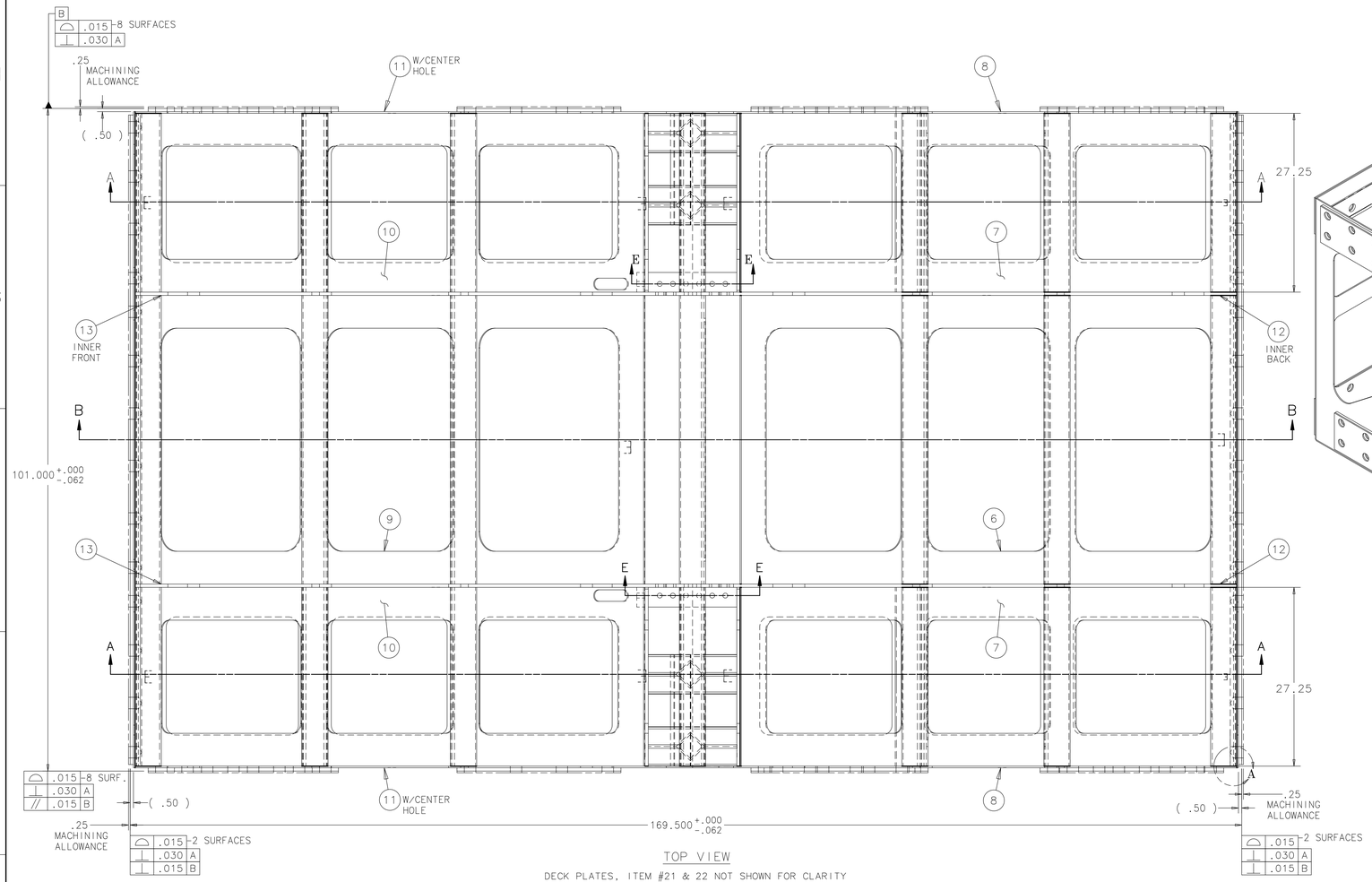

TOP VIEW

DECK PLATES, ITEM #21 & 22 NOT SHOWN FOR CLARITY

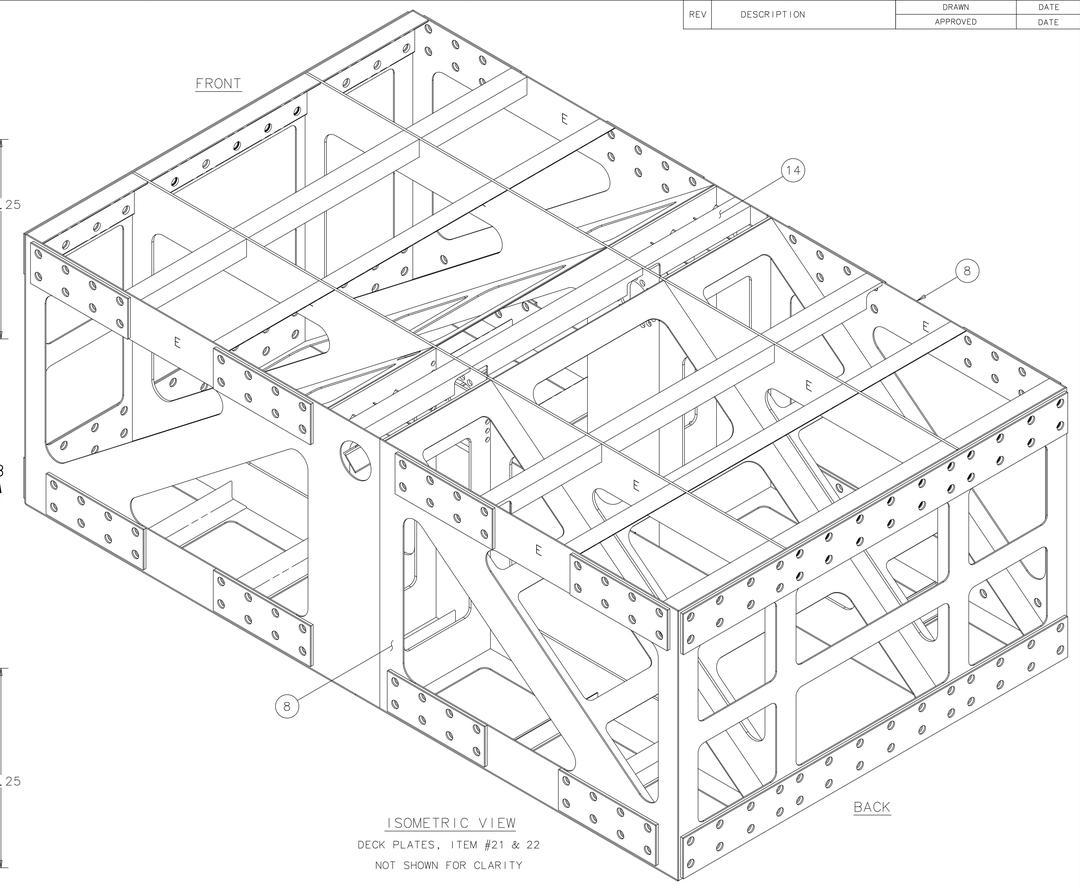

ISOMETRIC VIEW

DECK PLATES, ITEM #21 & 22

NOT SHOWN FOR CLARITY

EST. WEIGHT: 8000 LBS.

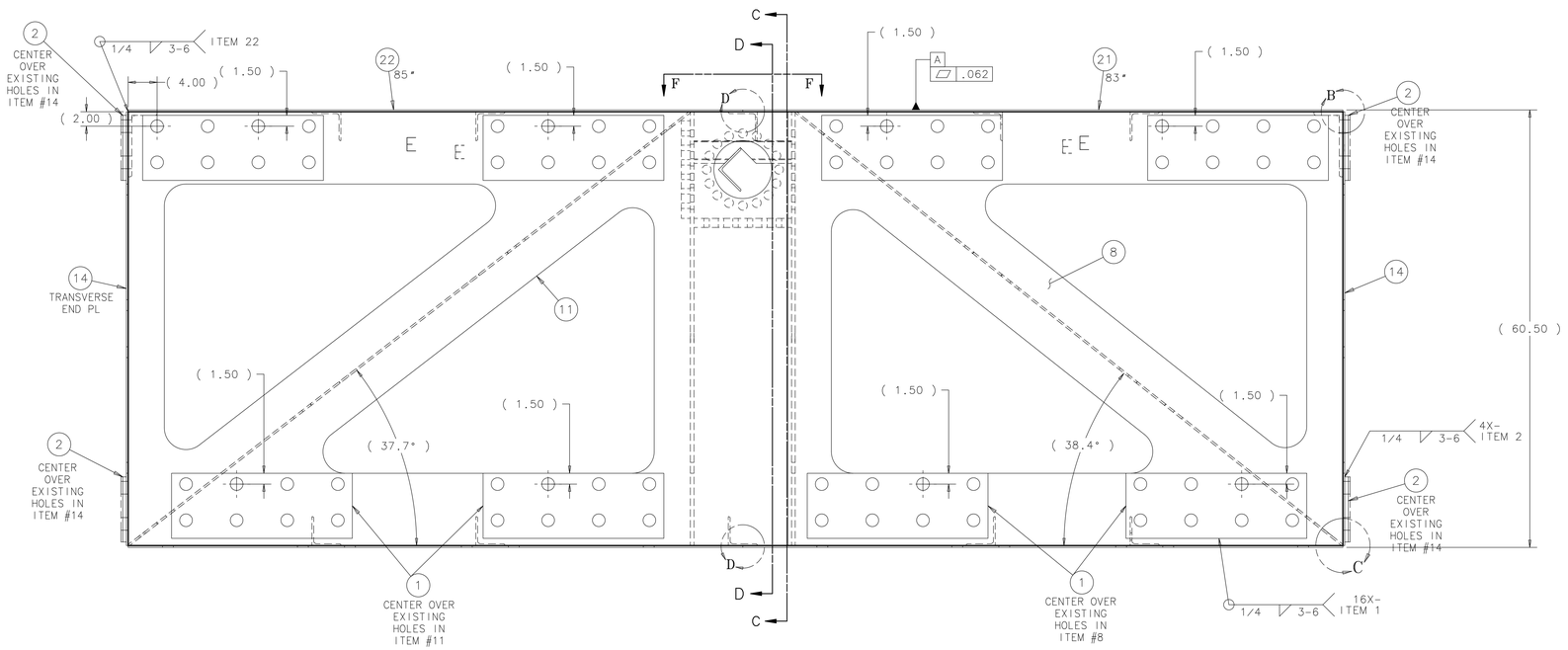

SECTION E-E

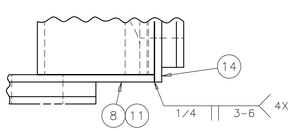

DETAIL A - SIDE CORNER WELD

SCALE= 1:2

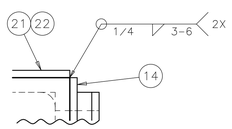

DETAIL B - TOP CORNER WELD

SCALE= 1:2

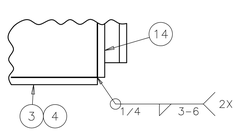

DETAIL C - BOTTOM CORNER WELD

SCALE= 1:2

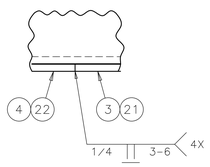

DETAIL D - SEAM WELD

TYP. FOR DECK PLATES & BOTTOM PLATES

SCALE= 1:2

NOTES

1. UNLESS NOTED, ALL WELD JOINTS ARE TO BE STAGGERED 1/4" FILLET WELDS 3.00" LG. X 6.00" PITCH WITH E70XX OR EQUIVALENT FILLER METAL.
2. ALL WELDING SHALL BE IN ACCORDANCE WITH ANSI/AWS D1.1, "STRUCTURAL WELDING CODE - STEELL"
3. ALL WELDS SHALL BE MADE IN A SEQUENCE THAT WILL BALANCE APPLIED WELDING HEAT WHILE THE WELDING PROGRESSES. THE PROCEDURE AND SEQUENCE SHALL BE DESIGNED TO MINIMIZE DISTORTION AND SHRINKAGE STRESSES.
4. ALL WELDS SHALL BE VISUALLY INSPECTED AND DYE PENETRANT INSPECTED TO DETECT SURFACE AND SUBSURFACE CRACKS AND DISCONTINUITIES IN ACCORDANCE WITH ANSI/AWS D1.1.
5. ALL WELD THAT FAIL AN INSPECTION SHALL BE REPAIRED IN ACCORDANCE WITH ANSI/AWS D1.1.
6. PAINT WITH PRIMER, DAMP-PROOF "RUST-O-LEUM" NO.769 OR EQUIV.
7. STAMPED LETTER "E" PROVIDED ON SOME ITEMS TO AID IN POSITIONING.

ITEM	PART NO.	DESCRIPTION OR SIZE	QTY.
25	MB-489034	ANGLE, 4x4x250x44, NOTCHED ENDS	1
24	MB-486816	STIFFENER ANGLE,4 x 4,COPED-RIGHT	2
23	MB-486814	STIFFENER ANGLE, 4 x 4,COPED-LEFT	2
22	MB-486782	DECK PLATE, 85 x 100	1
21	MB-486781	DECK PLATE, 83 x 100	1
20	MB-486778	STIFFENER ANGLE, 4 x 4 x 44.00	4
19	MB-486777	STIFFENER ANGLE, 4 x 4 x 27.25 LG	18
18	MB-486556	BEARING HOUSING SUPPORT BLOCK	4
17	MC-486796	TABLE PIVOT, SHAFT GUIDE WELDMENT	2
16	MC-486555	STIFFENER ANGLE B, 4 x 9 x 44.00	2
15	MC-486554	STIFFENER ANGLE A, 4 x 9 x 27.25	4
14	MC-486549	TRANSVERSE END PLATE	2
13	MD-486547	INNER FRONT PLATE	2
12	MC-486546	INNER BACK PLATE	2
11	MC-486544	FRONT SIDE PLATE	2
10	MC-486543	FRONT DIAGONAL PLATE	2
9	MC-486542	FRONT CENTER DIAGONAL PLATE	1
8	MC-486541	BACK SIDE PLATE	2
7	MC-486540	BACK DIAGONAL PLATE	2
6	MC-486539	BACK CENTER DIAGONAL PLATE	1
5	MC-486538	TRANSVERSE SIDE PLATE	4
4	MC-486532	BOTTOM PLATE, 1/4 x 28 x 85	2
3	MC-486531	BOTTOM PLATE, 1/4 x 28 x 83	2
2	MC-486507	REINFORCING PLATE, 3/4 x 9 x 99	4
1	MC-486506	REINFORCING PLATE, 3/4 x 9 x 25	16

PARTS LIST

UNLESS OTHERWISE SPECIFIED			ORIGINATOR	E.VILLEGAS	29-APR-2010
.XX	.XXX	ANGLES	DRAWN	P.POLL	11-JAN-2011
± .03	± ---	± 1°	CHECKED	J.RAUCH	29-APR-2011
			APPROVED	E.VILLEGAS	29-APR-2011

1. BREAK ALL SHARP EDGES .015 MAX.
2. DO NOT SCALE DRAWING.
3. DIMENSIONS BASED UPON ASME Y14.5M-1994
4. MAX. ALL MACH. SURFACES 250
5. DRAWING UNITS: U.S.INCH

USED ON: ME-489035

MATERIAL: SEE PARTS LIST ABOVE

FERMI NATIONAL ACCELERATOR LABORATORY
UNITED STATES DEPARTMENT OF ENERGY

NOVA-EQUIPMENT HANDLING ASH RIVER ASSEMBLY TABLE SECTION A PIVOT WELDMENT

SCALE	DRAWING NUMBER	SHEET	REV
1:8 & NOTED	3929.220-ME-486642	1 OF 2	

CREATED WITH : Ideas12NXSeries GROUP: PPD/MECHANICAL DEPARTMENT

REV	DESCRIPTION	DRAWN	DATE
		APPROVED	DATE

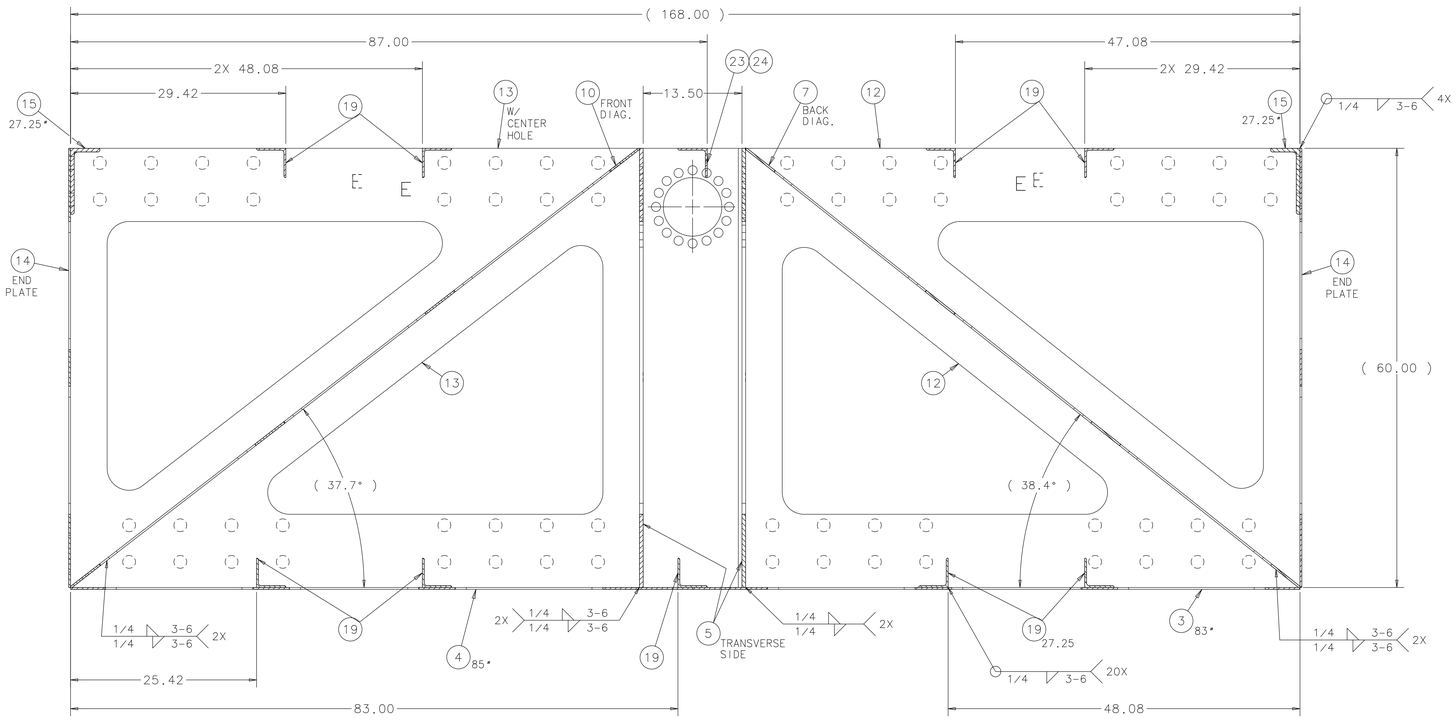

SECTION A-A

REINFORCING PLATES

NOT SHOWN FOR CLARITY

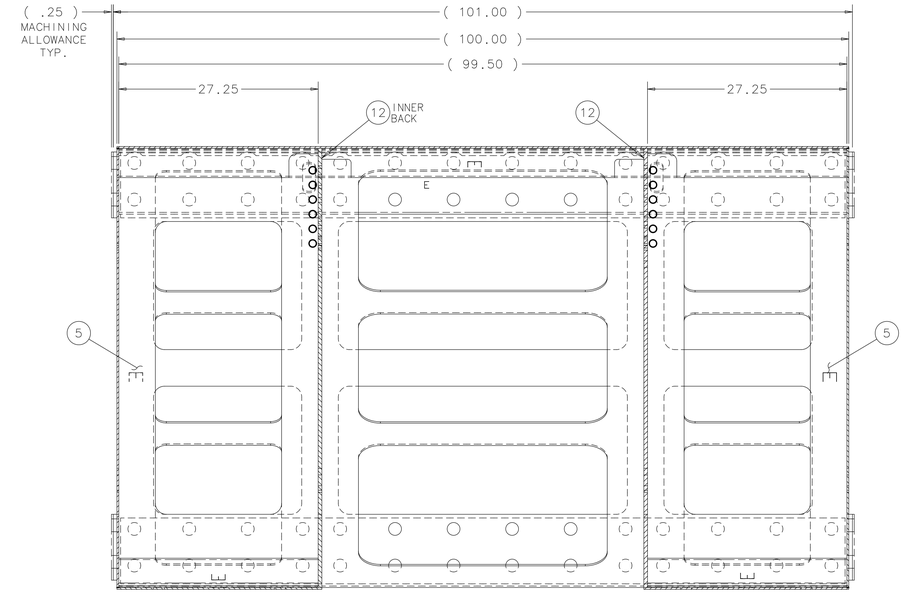

SECTION C-C

REINFORCING PLATES

NOT SHOWN FOR CLARITY

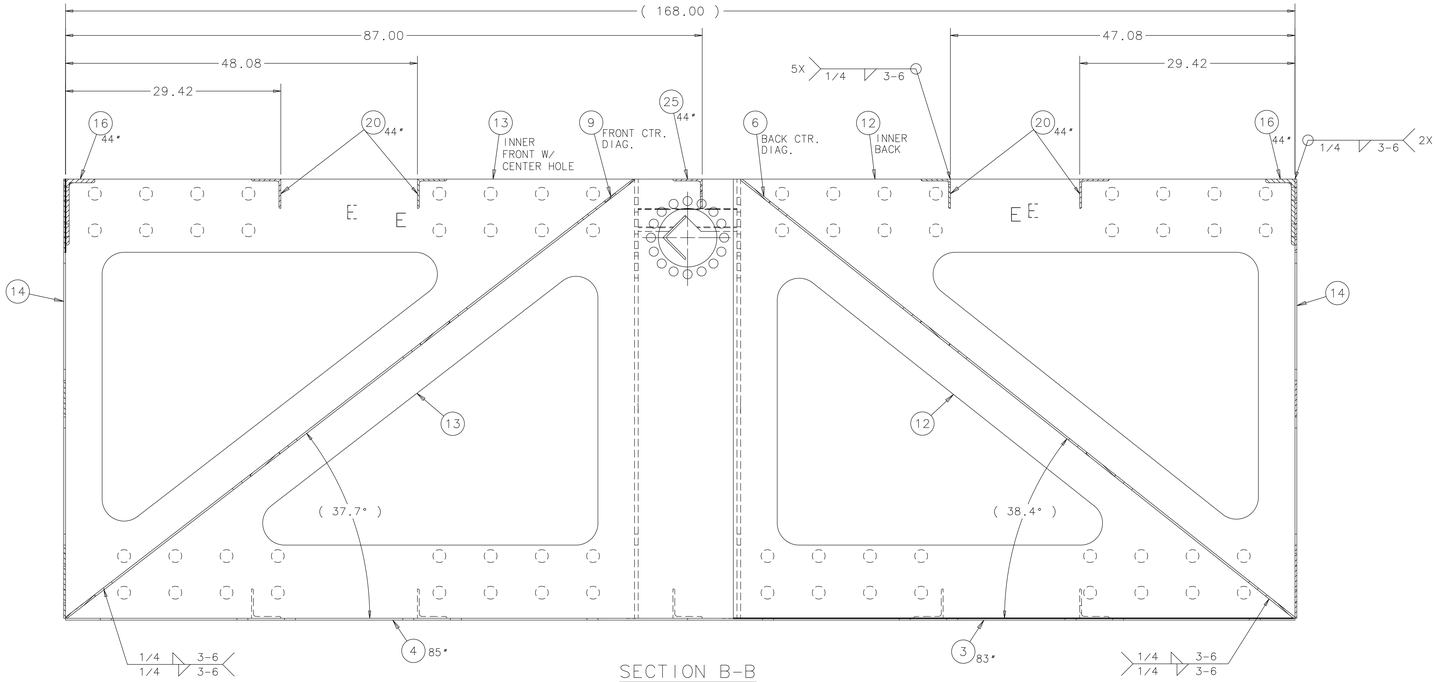

SECTION B-B

REINFORCING PLATES NOT SHOWN FOR CLARITY

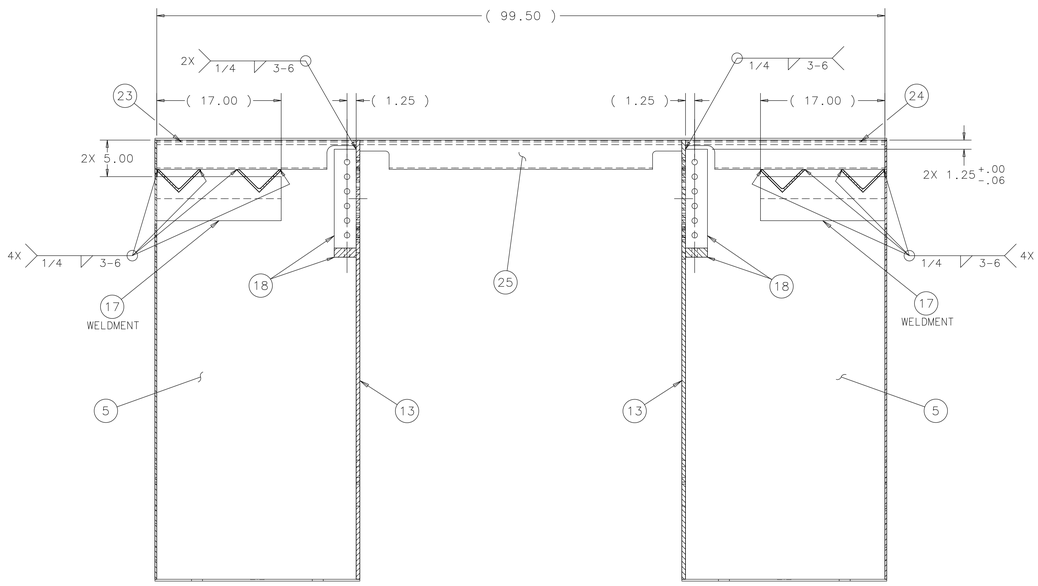

SECTION D-D

SOME STRUCTURAL PLATES NOT SHOWN FOR CLARITY

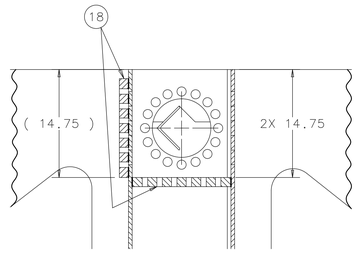

SECTION E-E

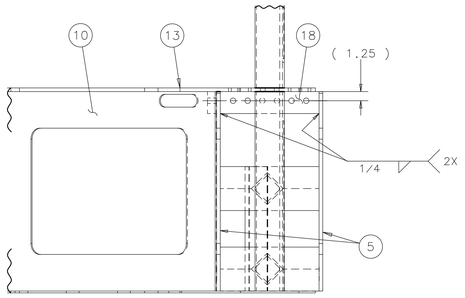

VIEW F-F

DECK PLATES NOT SHOWN FOR CLARITY

UNLESS OTHERWISE SPECIFIED			ORIGINATOR	E.VILLEGAS	29-APR-2010
.XX	.XXX	ANGLES	DRAWN	P.POLL	11-JAN-2011
± .03	± ---	± 1°	CHECKED	J.RAUCH	29-APR-2011
1. BREAK ALL SHARP EDGES .015 MAX. 2. DO NOT SCALE DRAWING. 3. DIMENSIONS BASED UPON ASME Y14.5M-1994 4. MAX. ALL MACH. SURFACES 250 5. DRAWING UNITS: U.S.INCH			APPROVED	E.VILLEGAS	29-APR-2011
			USED ON	ME-489035	
			MATERIAL	SEE PARTS LIST ABOVE	

FERMI NATIONAL ACCELERATOR LABORATORY
UNITED STATES DEPARTMENT OF ENERGY

NOVA-EQUIPMENT HANDLING
ASH RIVER ASSEMBLY TABLE
SECTION A PIVOT WELDMENT

SCALE	DRAWING NUMBER	SHEET	REV
1:8 & NOTED	3929.220-ME-486642	2 OF 2	

CREATED WITH : Ideas12NXSeries GROUP: PPD/MECHANICAL DEPARTMENT