REV	DESCRIPTION	DRAWN	DATE
		APPROVED	DATE

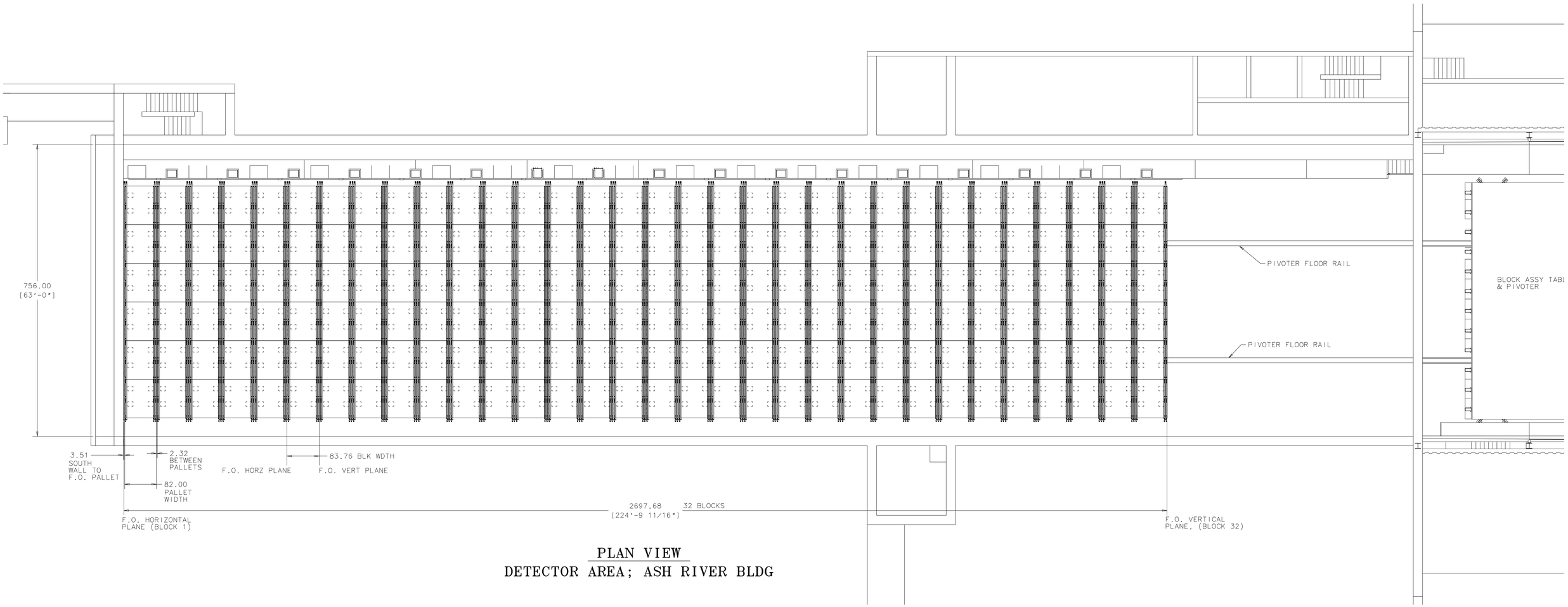

PLAN VIEW
DETECTOR AREA; ASH RIVER BLDG

NOTES:

1. MIDDLE PLANES OF BLOCKS ARE NOT SHOWN FOR CLARITY.

UNLESS OTHERWISE SPECIFIED			ORIGINATOR	V.GUARINO	09-MAY-2011
.XX	.XXX	ANGLES	DRAWN	D.FRIEND	09-MAY-2011
± --	± ---	± ---	CHECKED		
1. BREAK ALL SHARP EDGES MAX.			APPROVED		
2. DO NOT SCALE DRAWING.			USED ON		
3. DIMENSIONS BASED UPON ASME Y14.5M-1994					
4. MAX. ALL MACH. SURFACES √			MATERIAL		
5. DRAWING UNITS: U.S. INCH					

FERMI NATIONAL ACCELERATOR LABORATORY
UNITED STATES DEPARTMENT OF ENERGY

NOVA-FAR_DETECTOR
INSTALLATION & ENGINEERING SPECS
32 PLANE BLOCK SPACING LAYOUT

SCALE	DRAWING NUMBER	SHEET	REV
1/8"=1' & NOTED	3929.330-ME-489073	1 OF 2	

CREATED WITH : Ideas12NXSeries GROUP: PPD/MECHANICAL DEPARTMENT

Created: 13:28:57 on 09-05-11 (D-M-Y) By: friend State: 1-INITIAL

REV	DESCRIPTION	DRAWN	DATE
		APPROVED	DATE

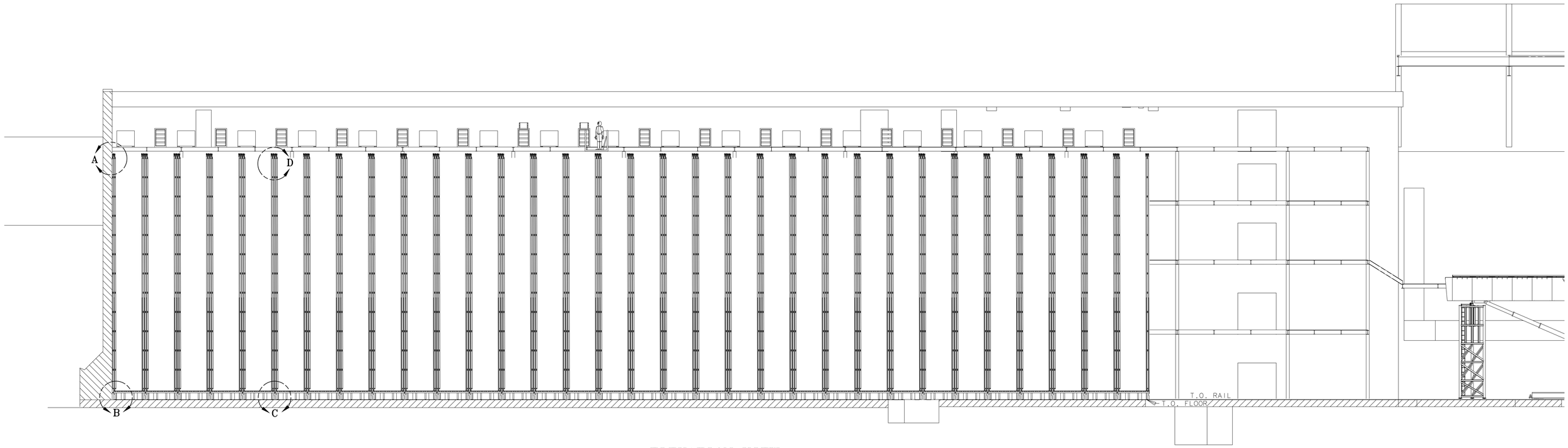

ELEVATION VIEW
DETECTOR AREA; ASH RIVER BLDG.

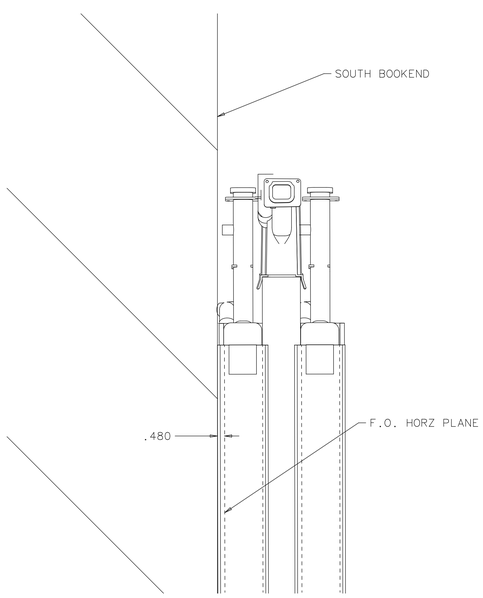

DETAIL A
SOUTH WALL & BLOCK 1
AT TOP OF BLOCK
SCALE: 1:4

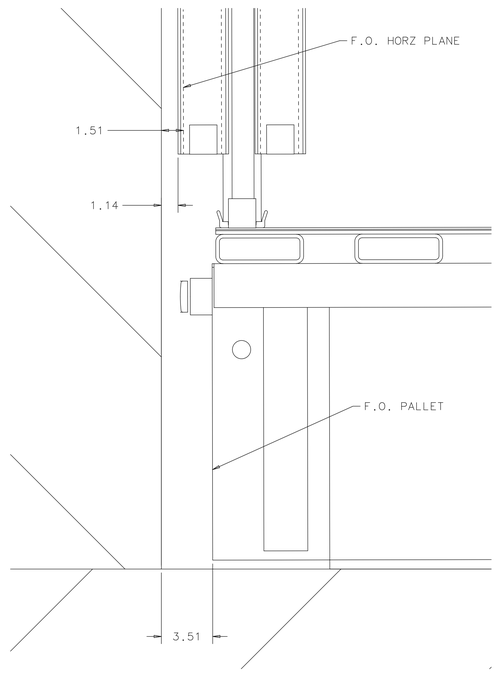

DETAIL B
SOUTH WALL & BLOCK 1
AT FLOOR
SCALE: 1:4

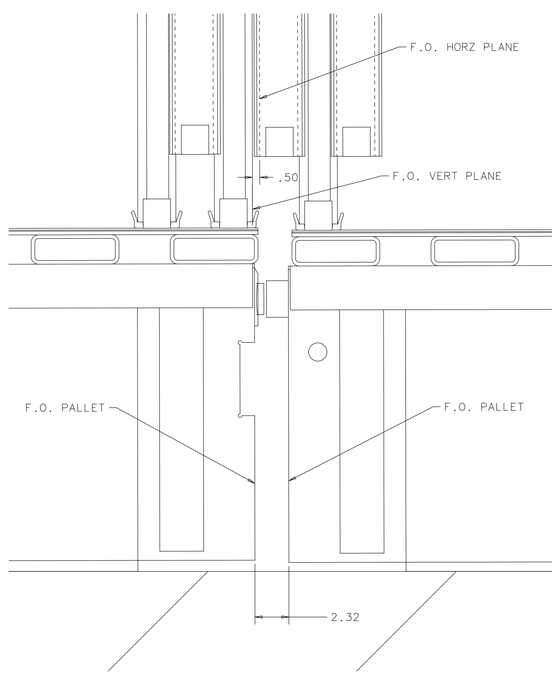

DETAIL C
TYP BLOCK TO BLOCK
SPACING AT FLOOR
SCALE: 1:4

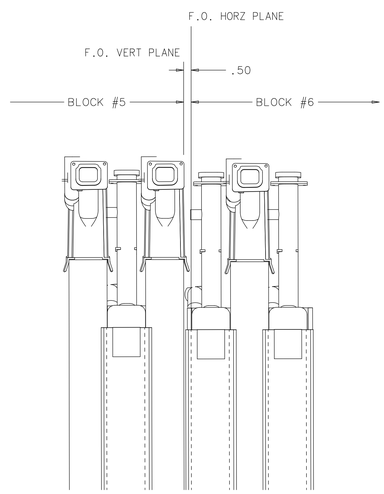

DETAIL D
TYP BLOCK TO BLOCK
SPACING AT TOP OF BLOCK
SCALE: 1:4

NOTES:

1. MIDDLE PLANES OF BLOCKS ARE NOT SHOWN FOR CLARITY.

UNLESS OTHERWISE SPECIFIED			ORIGINATOR	V.GUARINO	09-MAY-2011
.XX	.XXX	ANGLES	DRAWN	D.FRIEND	09-MAY-2011
± --	± ---	± ---	CHECKED		
1. BREAK ALL SHARP EDGES MAX.			APPROVED		
2. DO NOT SCALE DRAWING. 3. DIMENSIONS BASED UPON ASME Y14.5M-1994 4. MAX. ALL MACH. SURFACES √			USED ON		
5. DRAWING UNITS: U.S. INCH			MATERIAL		

FERMI NATIONAL ACCELERATOR LABORATORY
UNITED STATES DEPARTMENT OF ENERGY

NOVA-FAR_DETECTOR
INSTALLATION & ENGINEERING SPECS
32 PLANE BLOCK SPACING LAYOUT

SCALE	DRAWING NUMBER	SHEET	REV
1/8"=1' & NOTED	3929.330-ME-489073	2 OF 2	

CREATED WITH : Ideas12NXSeries GROUP: PPD/MECHANICAL DEPARTMENT