REV	DESCRIPTION	DRAWN	DATE
		APPROVED	DATE

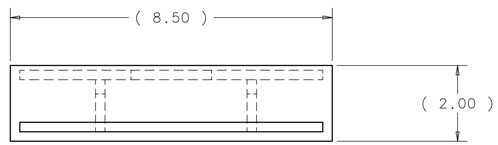

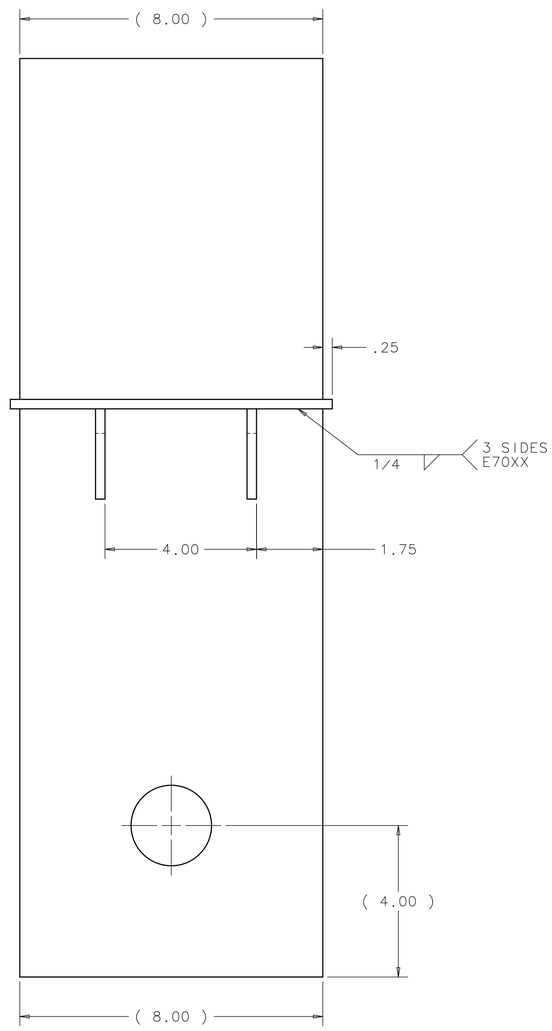

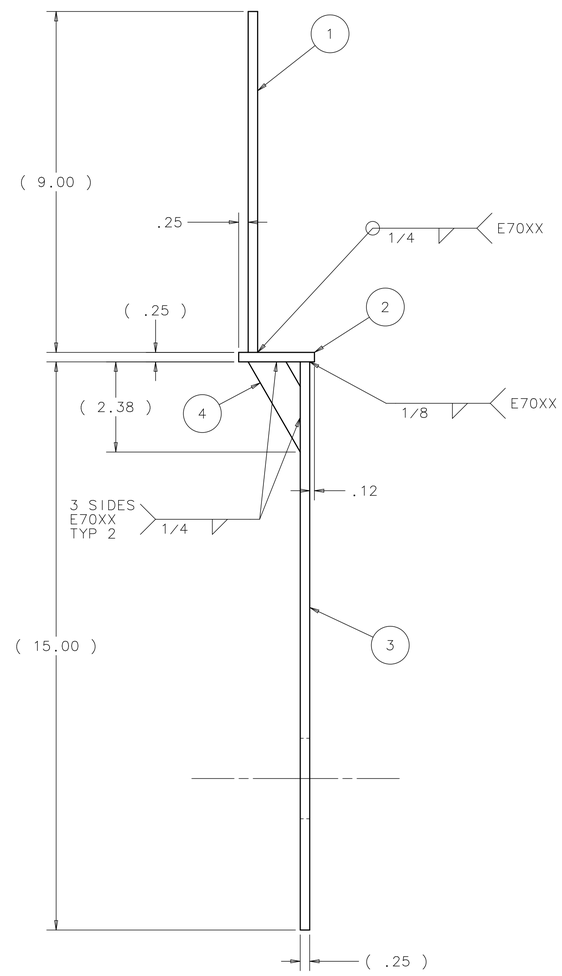

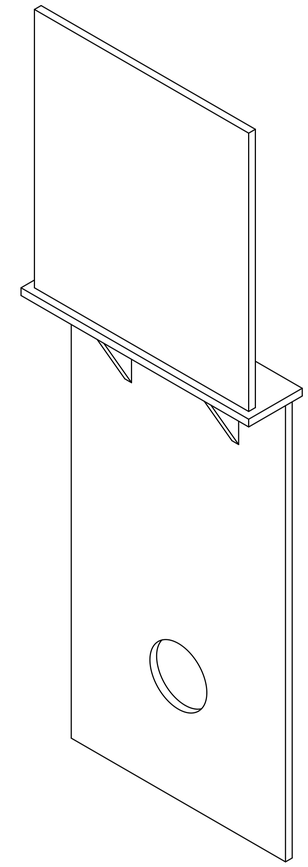

ESTIMATED WEIGHT = 15 LBS

ITEM	PART NO.	DESCRIPTION OR SIZE	QTY.
4	MB-489090	GUSSET PLATE - B	2
3	MB-489087	LOWER MOUNTING PLATE	1
2	COML	PLATE 1/4" X 8.50 X 2.00, A36 STL	1
1	COML	PLATE 1/4" X 8.00 X 9.00, A36 STL	1

PARTS LIST

UNLESS OTHERWISE SPECIFIED			ORIGINATOR	D.FRIEND	24-MAY-2011
.XX	.XXX	ANGLES	DRAWN	D.FRIEND	24-MAY-2011
± .06	± ---	± 1°	CHECKED		
			APPROVED		

1. BREAK ALL SHARP EDGES .015 MAX.
2. DO NOT SCALE DRAWING.
3. DIMENSIONS BASED UPON ASME Y14.5M-1994
4. MAX. ALL MACH. SURFACES 125
5. DRAWING UNITS: U.S. INCH

USED ON: ME-489017

MATERIAL: SEE PARTS LIST ABOVE

FERMI NATIONAL ACCELERATOR LABORATORY
UNITED STATES DEPARTMENT OF ENERGY

NOVA-EQUIPMENT HANDLING SHIPPING & HANDLING FHEP BLOCK RESTRAINT ASSY -SHORT

SCALE	DRAWING NUMBER	SHEET	REV
1:2	3929.000-MD-489093	1 OF 1	

CREATED WITH : Ideas12NXSeries | GROUP: PPD/MECHANICAL DEPARTMENT