REV	DESCRIPTION	DRAWN	DATE
		APPROVED	DATE

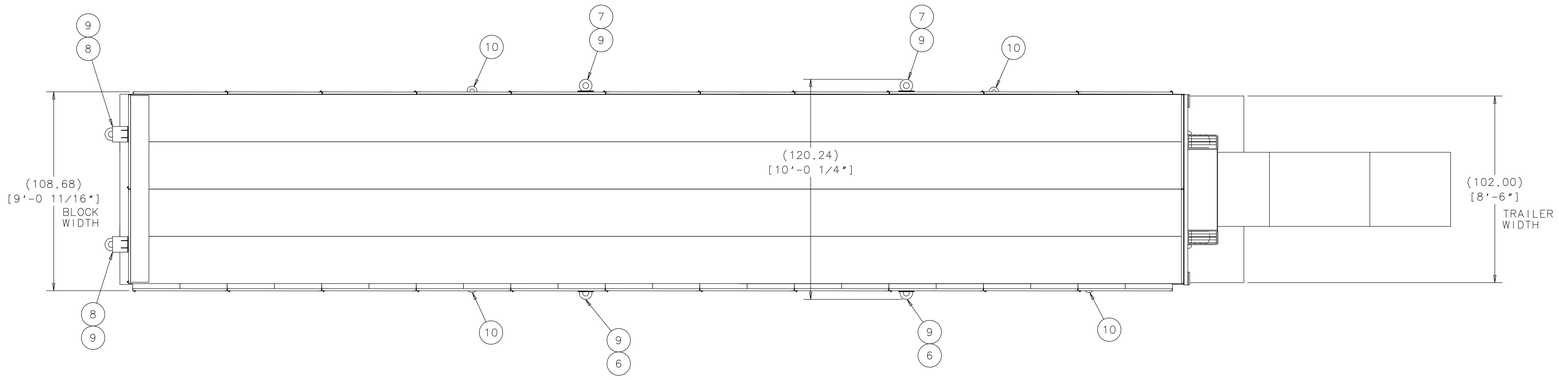

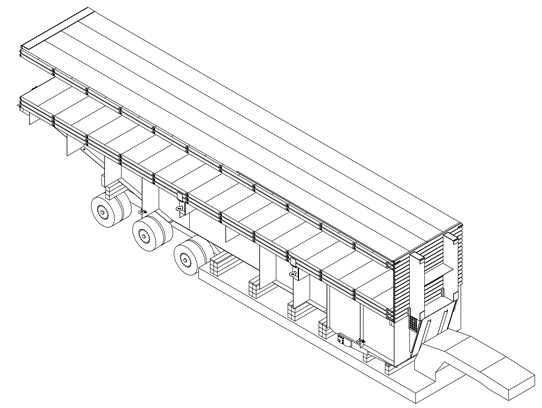

ISOMETRIC VIEW
SCALE: 3/16" = 1'-0"

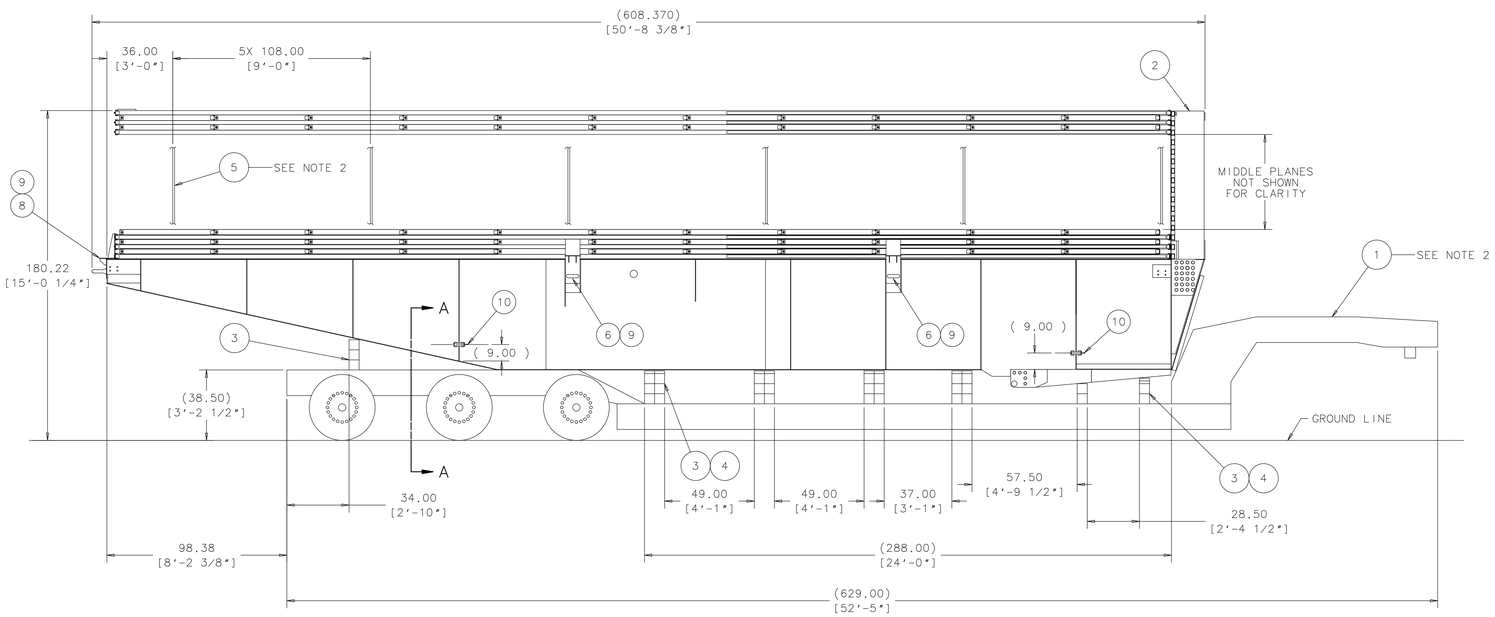

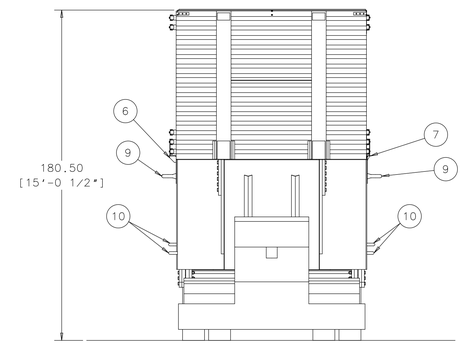

NOTES:

1. PRIOR TO INSTALLING BANDING (ITEM #5) PROTECT BLOCK ASSEMBLY (ITEM #2) ON TOP AND SIDES WITH EITHER FOAM OR WOOD SO THAT BANDING DOES NOT CAUSE DAMAGE OR HARM TO THE BLOCK ASSEMBLY.
2. SECURE ENTIRE LOAD TO THE TRAILER WITH USE OF NYLON STRAPS, CARE TO BE EXERCISED SO THAT DAMAGE TO THE BLOCK ASSEMBLY IS AVOIDED.
3. ESTIMATED WEIGHT OF BLOCK ASSEMBLY AND TABLE (ITEM #2) IS 77,589 LBS.

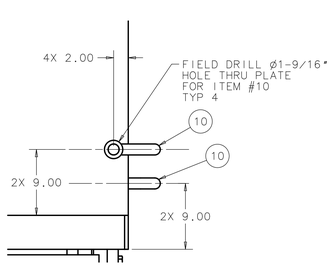

SECTION A-A
SHACKLE INSTALLATION
SCALE: 1:8

ITEM	PART NO.	DESCRIPTION OR SIZE	QTY.
10	COML	D-SHACKLE, WITH SCREW PIN, STL Ø1-1/2", 17 TON MCMASTER #3560T57	4
9	COML	EYEBOLT, PLAIN STL, 2"-4-1/2" UNC MCMASTER CARR #3014T61	6
8	MD-489094	BLOCK RESTRAINT ASSY - END	2
7	MD-489093	BLOCK RESTRAINT ASSY - SHORT	2
6	MD-489092	BLOCK RESTRAINT ASSY - LONG	2
5	COML	BANDING, S.S. 1" WIDE	A/R
4	COML	TIMBER, 2" X 6" X 96" LG	10
3	COML	TIMBER, 6" X 6" X 96" LG	31
2	ME-466566	FHEP BLOCK ASSY & TABLE	1
1		TRAILER - LOWBOY 50 TON	1

PARTS LIST

UNLESS OTHERWISE SPECIFIED			ORIGINATOR	D.FRIEND	15-JUN-2011
.XX	.XXX	ANGLES	DRAWN	D.FRIEND	15-JUN-2011
± ---	± ---	±----	CHECKED		
			APPROVED		

1. BREAK ALL SHARP EDGES MAX.
2. DO NOT SCALE DRAWING.
3. DIMENSIONS BASED UPON ASME Y14.5M-1994
4. MAX. ALL MACH. SURFACES
5. DRAWING UNITS: U.S. INCH

USED ON

MATERIAL: SEE PARTS LIST ABOVE

FERMI NATIONAL ACCELERATOR LABORATORY
UNITED STATES DEPARTMENT OF ENERGY

NOVA-EQUIPMENT HANDLING
FHEP SHIPPING & HANDLING
BLOCK ASSY SHIPPING LAYOUT

SCALE	DRAWING NUMBER	SHEET	REV
3/8"=1'-0" & NOTED	3929.000-ME-489017	1 OF 1	

CREATED WITH : Ideas12NXSeries GROUP: PPD/MECHANICAL DEPARTMENT

Created: 13:32:34 on 15-06-11 (D-M-Y) By: friend State: 1-INITIAL