REV	DESCRIPTION	DRAWN	DATE
		APPROVED	DATE

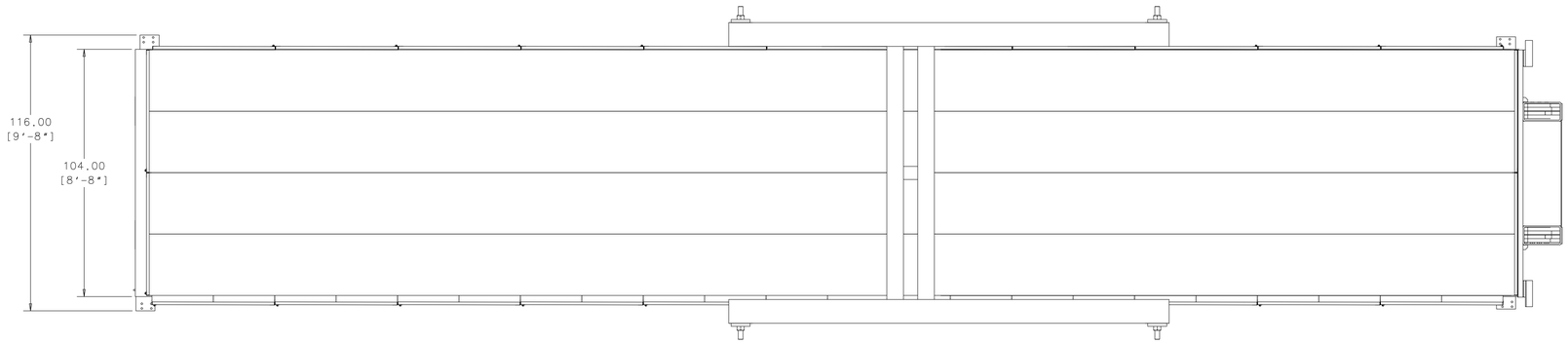

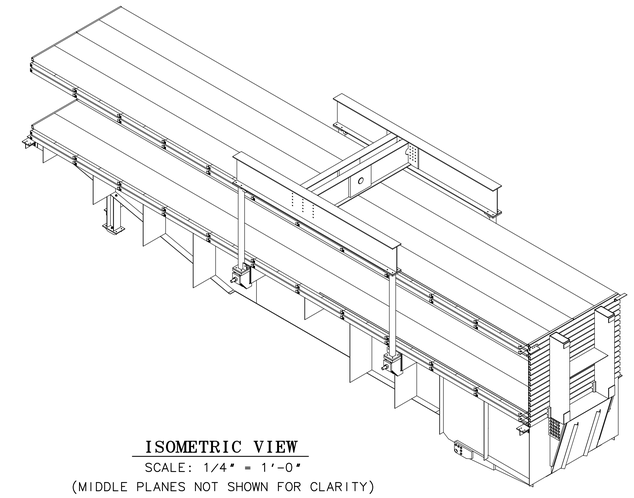

ISOMETRIC VIEW
SCALE: 1/4" = 1'-0"
(MIDDLE PLANES NOT SHOWN FOR CLARITY)

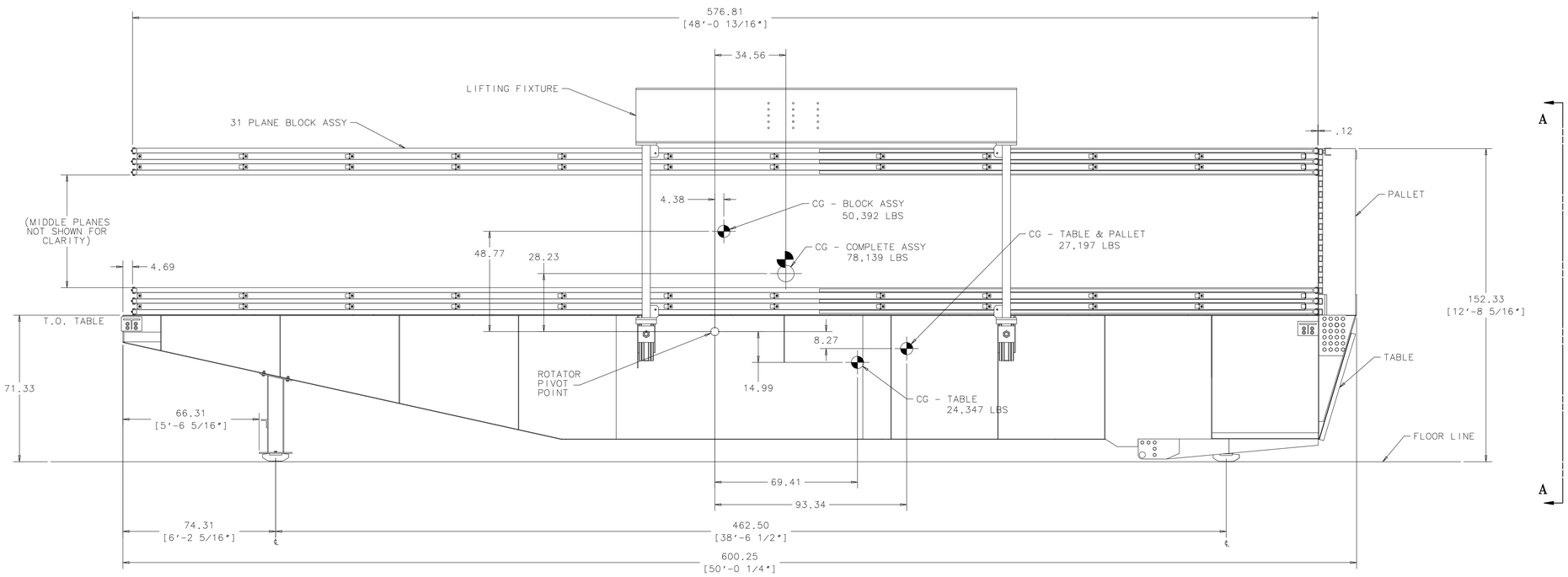

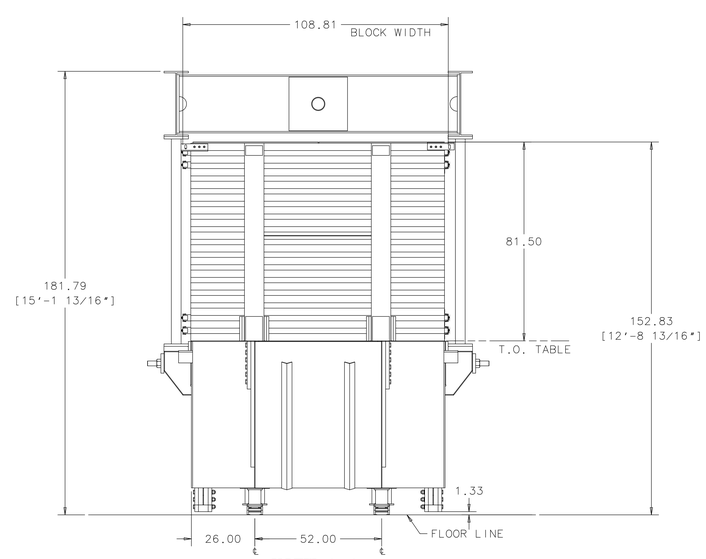

VIEW A-A

NOTES:

1. TOTAL ASSEMBLY WEIGHT = 78,139 LBS
   TABLE W/PLYWOOD SHIMMING WEIGHT = 24,347 LBS
   PALLET WEIGHT = 2,850 LBS
   31 PLANE BLOCK ASSY = 50,392 LBS

2. ALL DIMENSIONS ARE REFERENCE ONLY.
   ALL WEIGHTS SHOWN ARE ESTIMATED.

UNLESS OTHERWISE SPECIFIED			ORIGINATOR	D.PUSHKA	30-MAR-2011
.XX	.XXX	ANGLES	DRAWN	D.FRIEND	30-MAR-2011
± --	± ---	± --	CHECKED		
1. BREAK ALL SHARP EDGES --- MAX.			APPROVED		
2. DO NOT SCALE DRAWING. 3. DIMENSIONS BASED UPON ASME Y14.5M-1994 4. MAX. ALL MACH. SURFACES			USED ON		
5. DRAWING UNITS: U.S. INCH			MATERIAL REF DWG ME-466566		

FERMI NATIONAL ACCELERATOR LABORATORY
UNITED STATES DEPARTMENT OF ENERGY

NOVA-FHEP
BLOCK, TABLE, & PALLET LAYOUT
CG LOCATION LAYOUT

SCALE	DRAWING NUMBER	SHEET	REV
1/2"=1'-0" & NOTED	3929.200-ME-486364	1 OF 1	

CREATED WITH : Ideas12NXSeries GROUP: PPD/MECHANICAL DEPARTMENT