REV	DESCRIPTION	DRAWN	DATE
		APPROVED	DATE

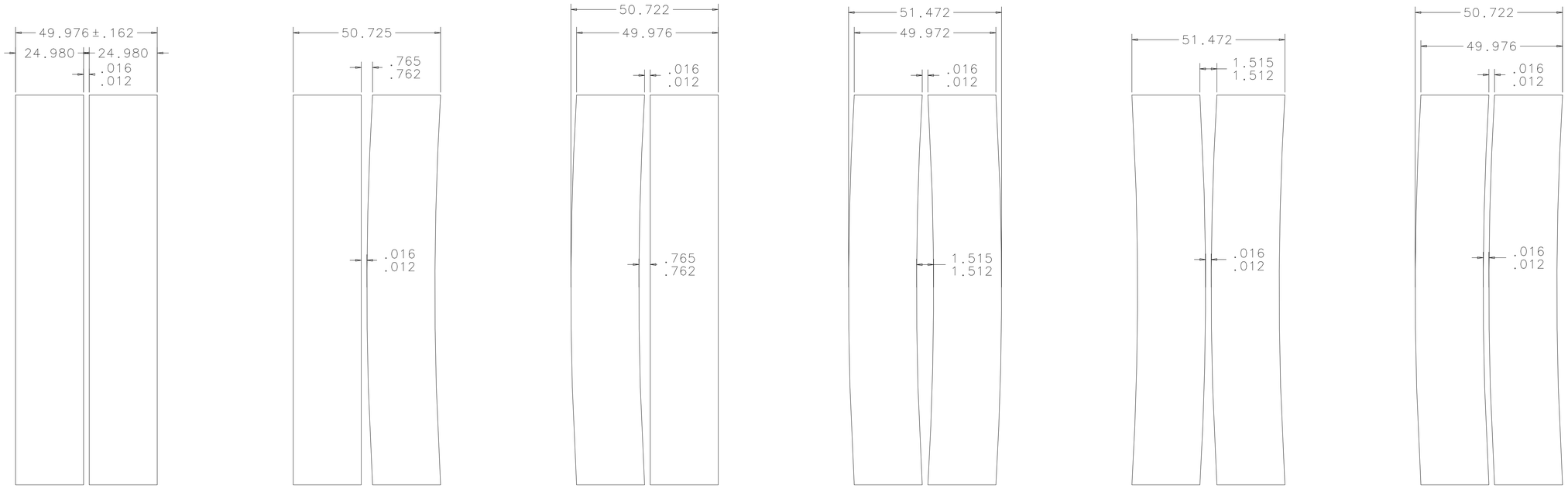

CONDITION 1
2 STRAIGHT MODULES

CONDITION 2
1 STRAIGHT MODULE &
1 CURVED MODULE

CONDITION 3
1 CURVED MODULE &
1 STRAIGHT MODULE

CONDITION 4
2 CURVED MODULES
OPPOSITE BOWS AT MIDDLE

CONDITION 5
2 CURVED MODULES
OPPOSITE BOWS AT ENDS

CONDITION 6
2 CURVED MODULES
NESTED

EXTRUSIONS BASED ON MAXIMUM ALLOWABLE OUT OF STRAIGHTNESS TOLEERANCE FROM VENDOR

EXTRUSIONS BASED ON SHIPMENTS RECEIVED BY MODULE FACTORY AT AN 8mm CHAMBER

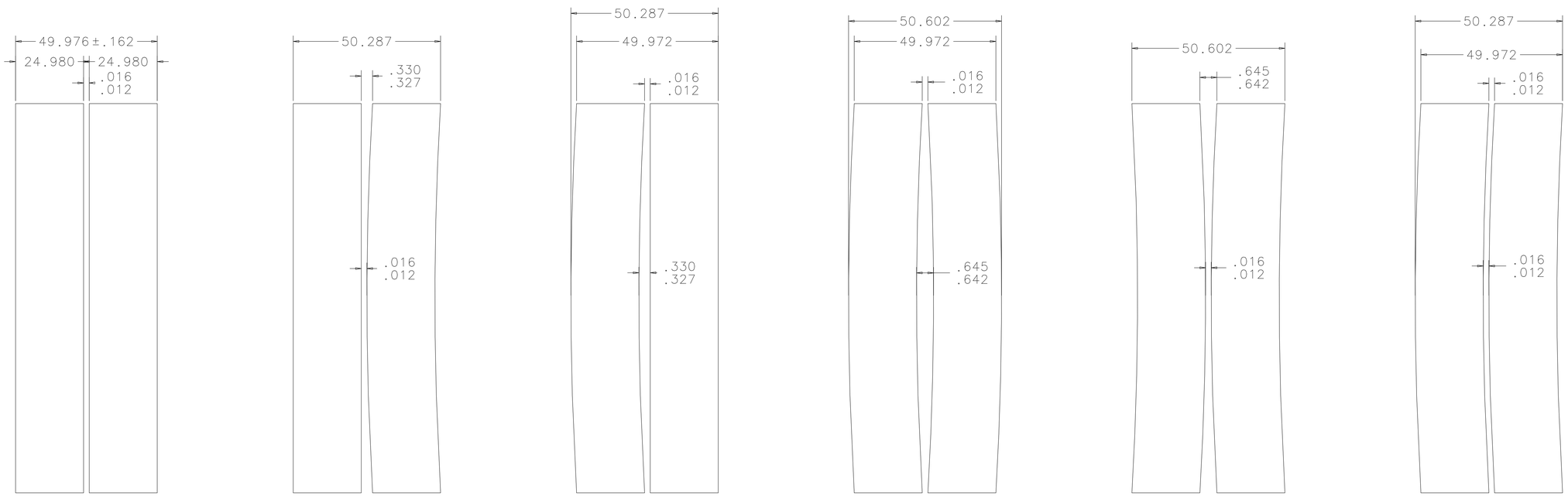

CONDITION 1
2 STRAIGHT MODULES

CONDITION 2
1 STRAIGHT MODULE &
1 CURVED MODULE

CONDITION 3
1 CURVED MODULE &
1 STRAIGHT MODULE

CONDITION 4
2 CURVED MODULES
OPPOSITE BOWS AT MIDDLE

CONDITION 5
2 CURVED MODULES
OPPOSITE BOWS AT ENDS

CONDITION 6
2 CURVED MODULES
NESTED

UNLESS OTHERWISE SPECIFIED	ORIGINATOR	D.FRIEND	18-JAN-2012
	DRAWN	D.FRIEND	18-JAN-2012
± ± ±	CHECKED		
1. BREAK ALL SHARP EDGES MAX. 2. DO NOT SCALE DRAWING. 3. DIMENSIONS BASED UPON	APPROVED		
4. MAX. ALL MACH. SURFACES √	USED ON		
5. DRAWING UNITS:	MATERIAL		

FERMI NATIONAL ACCELERATOR LABORATORY
UNITED STATES DEPARTMENT OF ENERGY

NOVA-PRELIMINARY_DESIGN
FAR DETECTOR EXTRUSIONS
2:1 MODULE GLUEING CONDITIONS

SCALE	DRAWING NUMBER	SHEET	REV
NONE	3929.000-ME-489453	1 OF 1	

CREATED WITH : Ideas12NXSeries GROUP: PPD/MECHANICAL DEPARTMENT

Created: 10:23:53 on 09-02-12 (D-M-Y) By: friend State: 1-INITIAL