REV	DESCRIPTION	DRAWN	DATE
		APPROVED	DATE

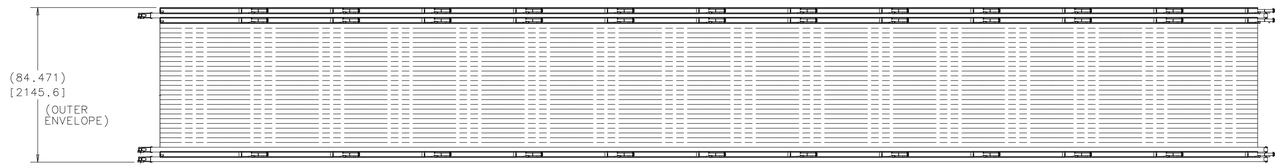

NOTE: MIDDLE PLANES NOT
SHOWN FOR CLARITY

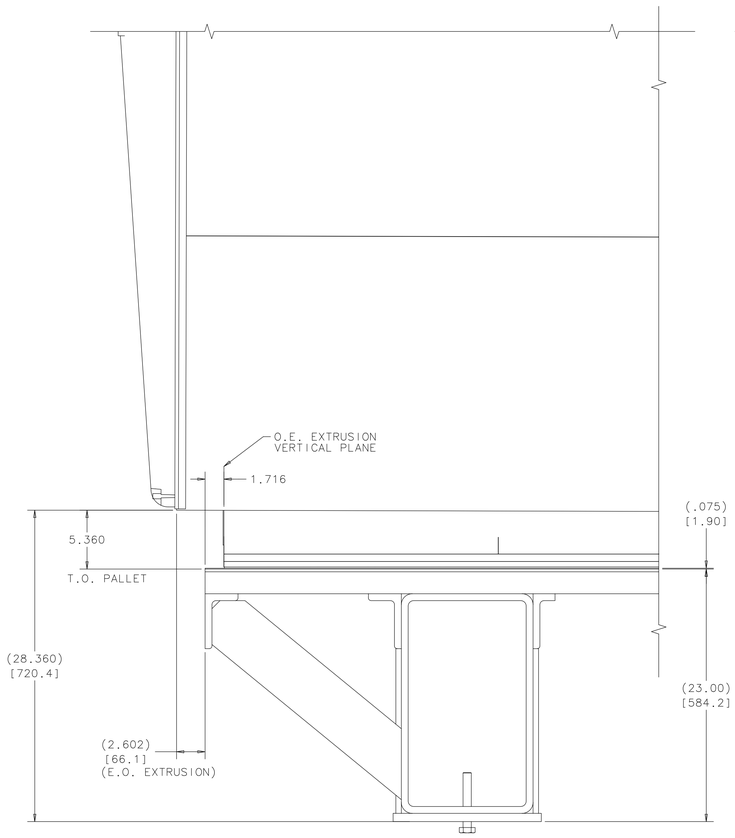

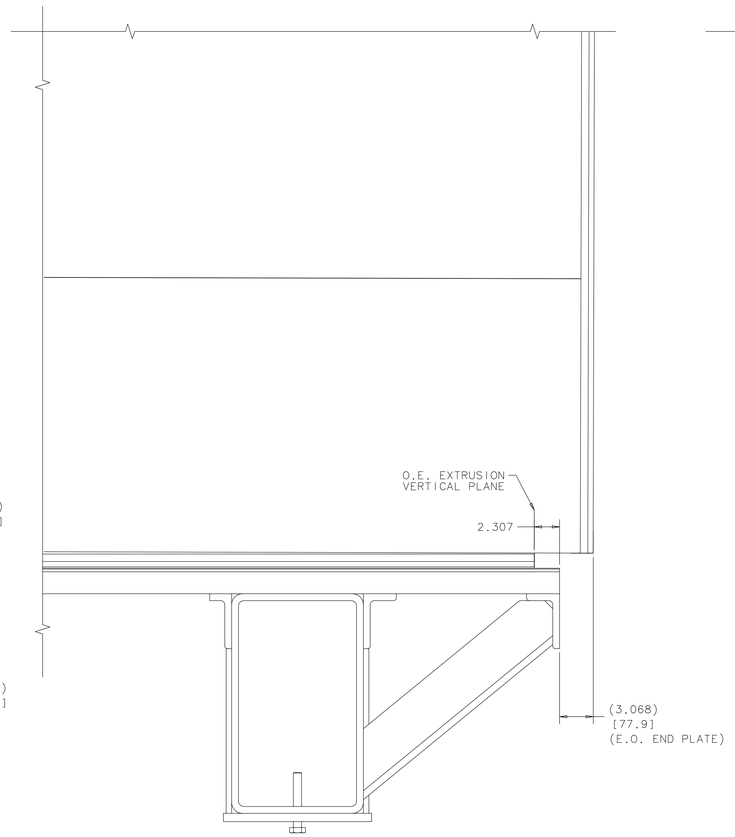

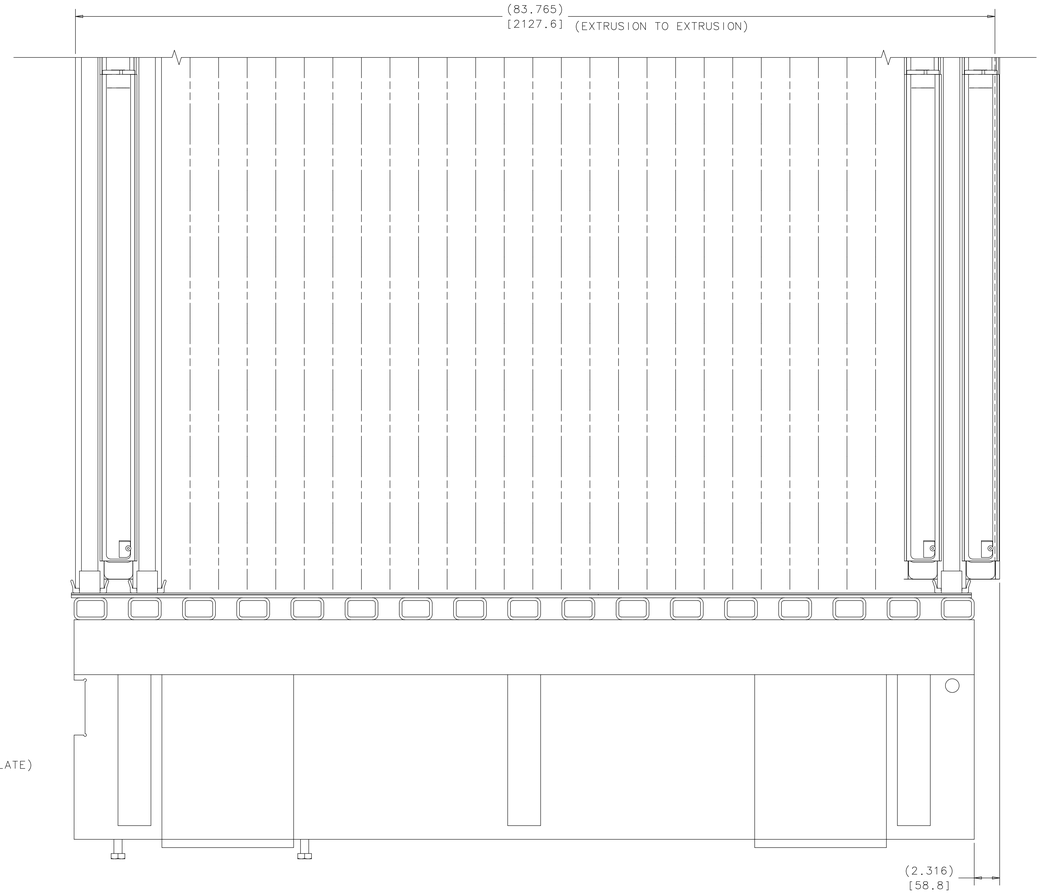

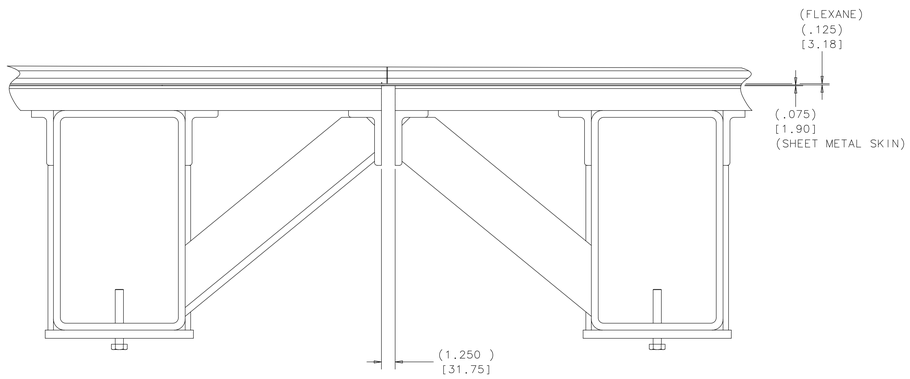

DISTANCE BETWEEN PALLETS

VOID

SEE DWG #ME-489028

UNLESS OTHERWISE SPECIFIED			ORIGINATOR	E.VILLEGAS	19-DEC-2011
.XX	.XXX	ANGLES	DRAWN	B.ELLISON	19-DEC-2011
± ••	± •••	± •••	CHECKED		
1. BREAK ALL SHARP EDGES .015 MAX. 2. DO NOT SCALE DRAWING. 3. DIMENSIONS BASED UPON ASME Y14.5M-1994 4. MAX. ALL MACH. SURFACES √ 5. DRAWING UNITS: U.S. INCH			APPROVED		
			USED ON		
			MATERIAL		

FERMI NATIONAL ACCELERATOR LABORATORY
UNITED STATES DEPARTMENT OF ENERGY

NOVA-DETECTOR PROTOTYPE
FAR DETECTOR
32 PLANE BLK & PALLET LAYOUT

SCALE	DRAWING NUMBER	SHEET	REV
NONE	3929.330-ME-489031	1 OF 1	

CREATED WITH : Ideas12NXSeries GROUP: PPD/MECHANICAL DEPARTMENT