REV	DESCRIPTION	DRAWN	DATE
		APPROVED	DATE

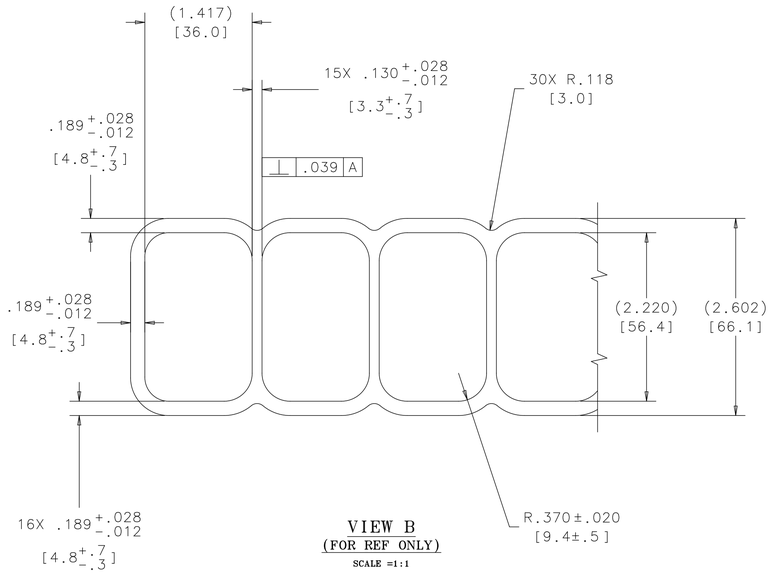

VIEW B
(FOR REF ONLY)
SCALE =1:1

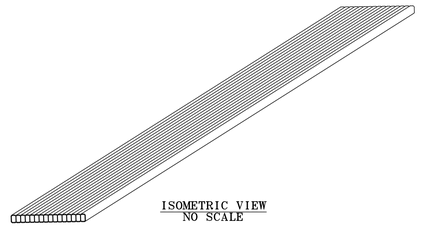

ISOMETRIC VIEW
NO SCALE

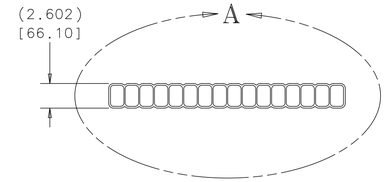

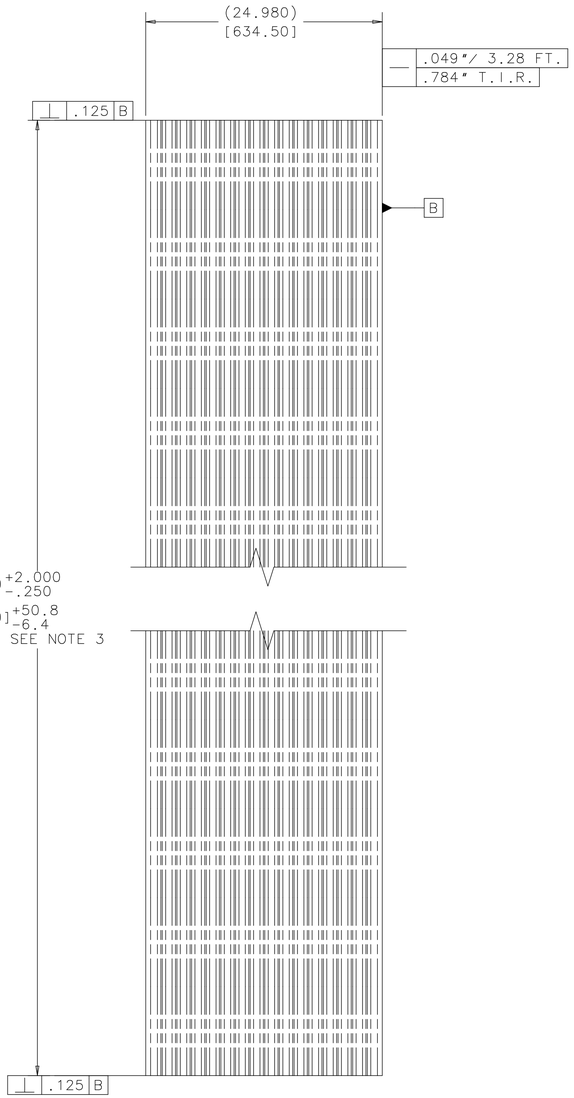

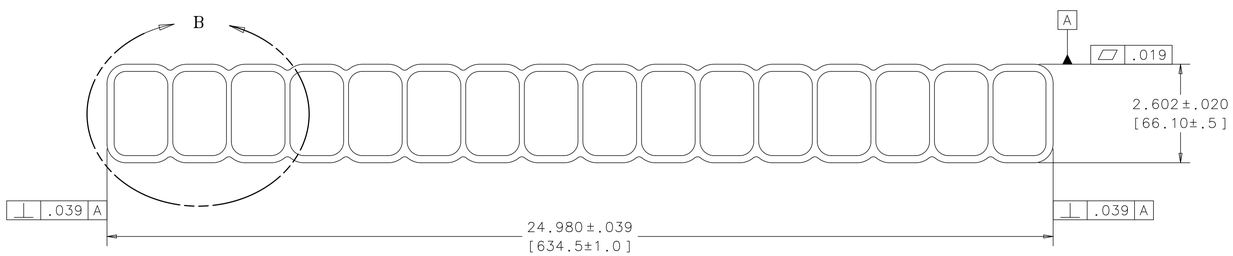

VIEW A
SCALE =1:2

NOTES:

5. EST. WEIGHT= 484 LBS
4. SEE DWG. #444189 FOR EXTRUSION DIE PROFILE
3. LENGTH AS DELIVERED FROM EXTRUDER MANUFACTURER
2. TOTAL LIQUID SCINTILLATOR CROSS SECTIONAL AREA IS 48.548 sq/in (31,321.230 sq mm)
1. EXTRUSION CROSS SECTIONAL AREA (PVC ONLY) IS 14.680 sq/in (9,470.949 sq mm)

UNLESS OTHERWISE SPECIFIED			ORIGINATOR	E.VILLEGAS	06-JUN-2011
.XX	.XXX	ANGLES	DRAWN	S.HENTSCHEL	06-JUN-2011
± ---	± ---	± 1°	CHECKED		
			APPROVED		

1. BREAK ALL SHARP EDGES .015 MAX.
2. DO NOT SCALE DRAWING.
3. DIMENSIONS BASED UPON ASME Y14.5M-1994
4. MAX. ALL MACH. SURFACES 125
5. DRAWING UNITS: U.S. INCH

USED ON: MC-489026

MATERIAL: PVC (POLYVINYL CHLORIDE)

FERMI NATIONAL ACCELERATOR LABORATORY
UNITED STATES DEPARTMENT OF ENERGY

NOVA-MECHANICAL MODULE ASSEMBLY 16 CELL EXTRUSION

SCALE	DRAWING NUMBER	SHEET	REV
1:8 NOTED	3929.330-MD-489027	1 OF 1	

CREATED WITH : Ideas12NXSeries | GROUP: PPD/MECHANICAL DEPARTMENT

TECHNICAL INFORMATION ONLY
NOT FOR CONSTRUCTION
CREATED: 06-JUN-2011
BY: D.FRIEND