REV	DESCRIPTION	DRAWN	DATE
		APPROVED	DATE

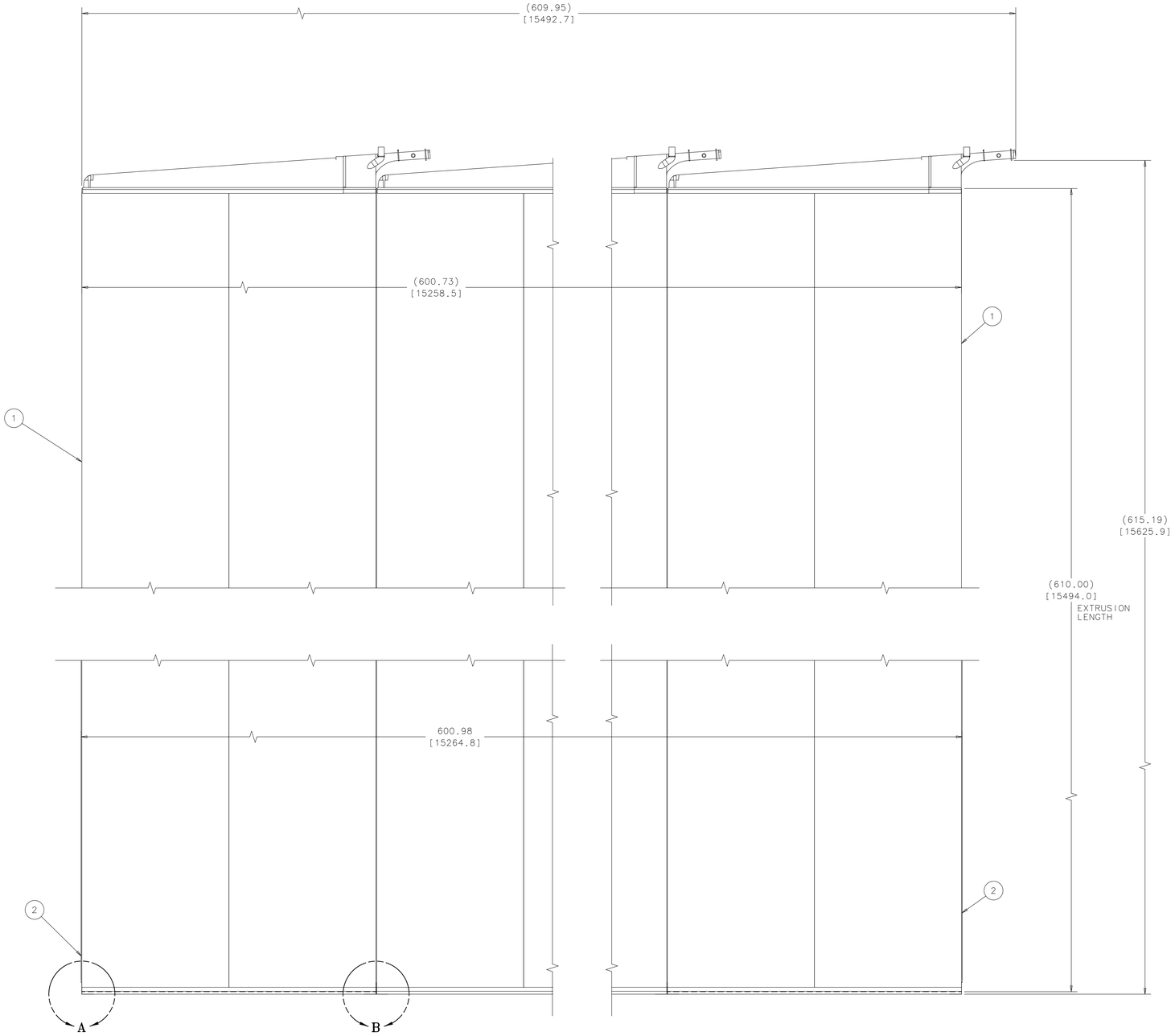

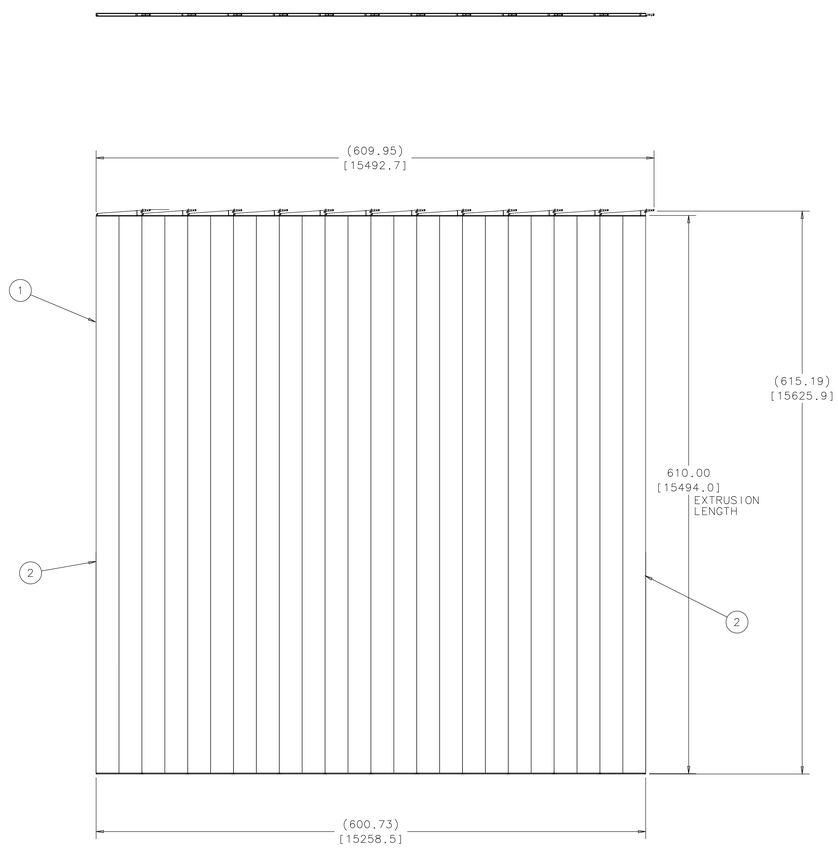

NOTES:

1. THIS DWG. IS FOR REFERENCE ONLY. ACTUAL ASSEMBLY OF PLANE WILL TAKE PLACE AT NEXT HIGHER ASSEMBLY; SEE DWG. ME-489028.
2. ESTIMATED WEIGHT IS 11,765 LBS.

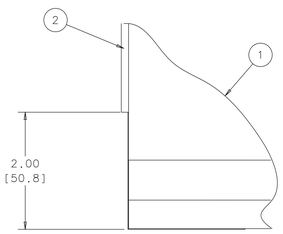

DETAIL A
SCALE: 1:1

ENLARGED CORNERS
SCALE: 1/8

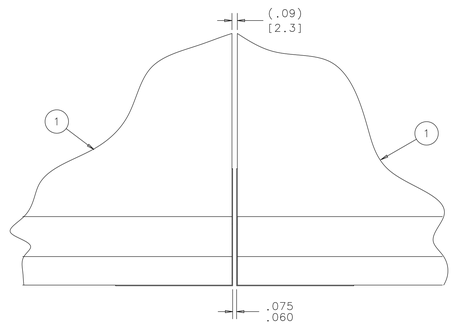

DETAIL B
SCALE: 1:1

ITEM	PART NO.	DESCRIPTION OR SIZE	QTY.
2	MC-444813	EDGE STIFFENER	2
1	ME-489025	32 CELL MODULE	12

PARTS LIST

UNLESS OTHERWISE SPECIFIED			ORIGINATOR	V.VILLEGAS	17-AUG-2011
.XX	.XXX	ANGLES	DRAWN	S.HENTSCHEL	17-AUG-2011
± .12	± ---	± 1°	CHECKED		
			APPROVED		

1. BREAK ALL SHARP EDGES MAX.
2. DO NOT SCALE DRAWING.
3. DIMENSIONS BASED UPON ASME Y14.5M-1994
4. MAX. ALL MACH. SURFACES
5. DRAWING UNITS: U.S. INCH

USED ON: ME-489028

MATERIAL: SEE PARTS LIST ABOVE

FERMI NATIONAL ACCELERATOR LABORATORY
UNITED STATES DEPARTMENT OF ENERGY

NOVA-FAR_DETECTOR
DETECTOR ASSEMBLY
12 MODULE VERTICAL PLANE

SCALE	DRAWING NUMBER	SHEET	REV
1:64 1:8, NOTED	3929.330-ME-489024	1 OF 1	

CREATED WITH : Ideas12NXSeries | GROUP: PPD/MECHANICAL DEPARTMENT