REV	DESCRIPTION	DRAWN	DATE
		APPROVED	DATE

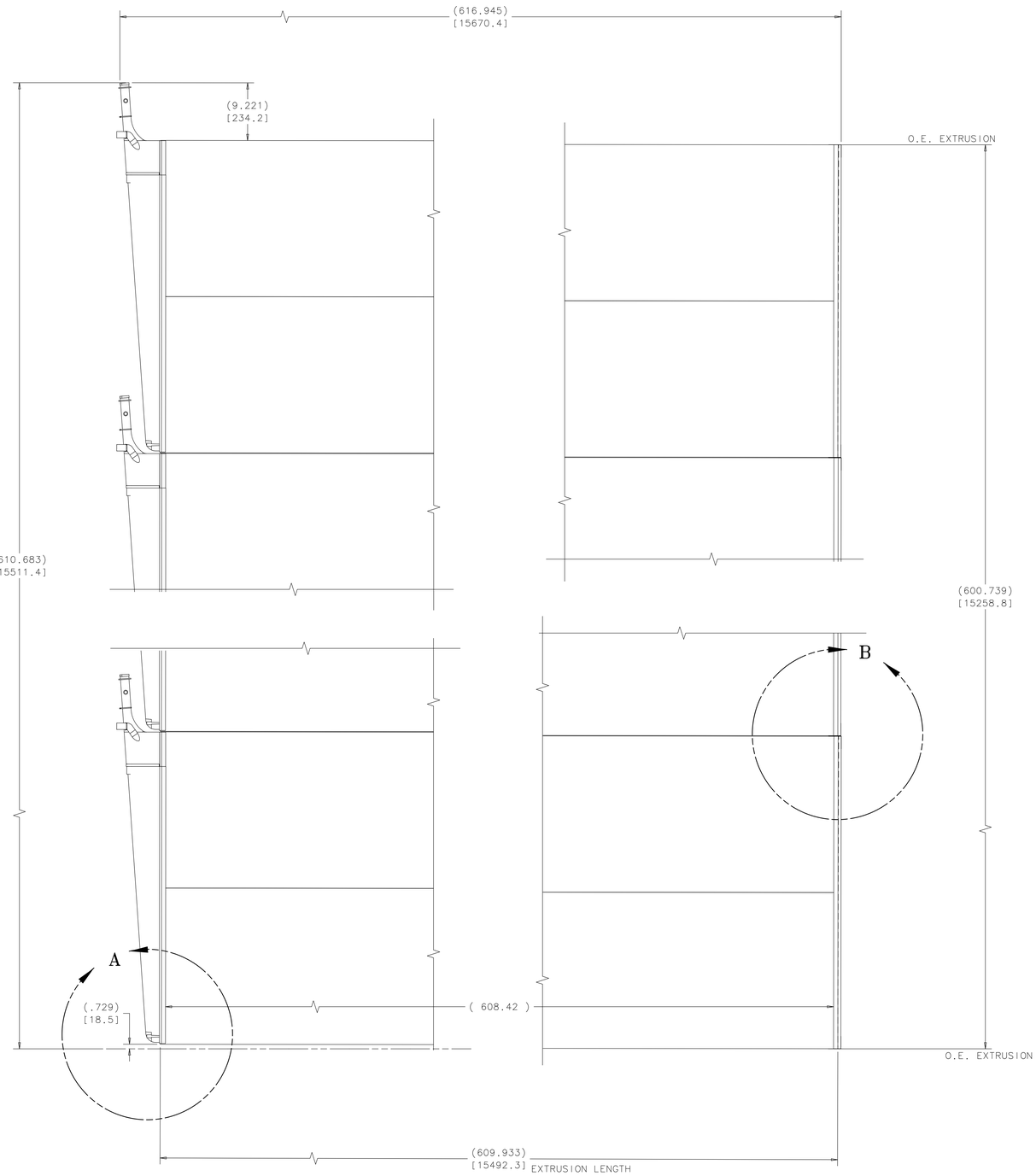

ENLARGE CORNERS
SCALE = 1/8

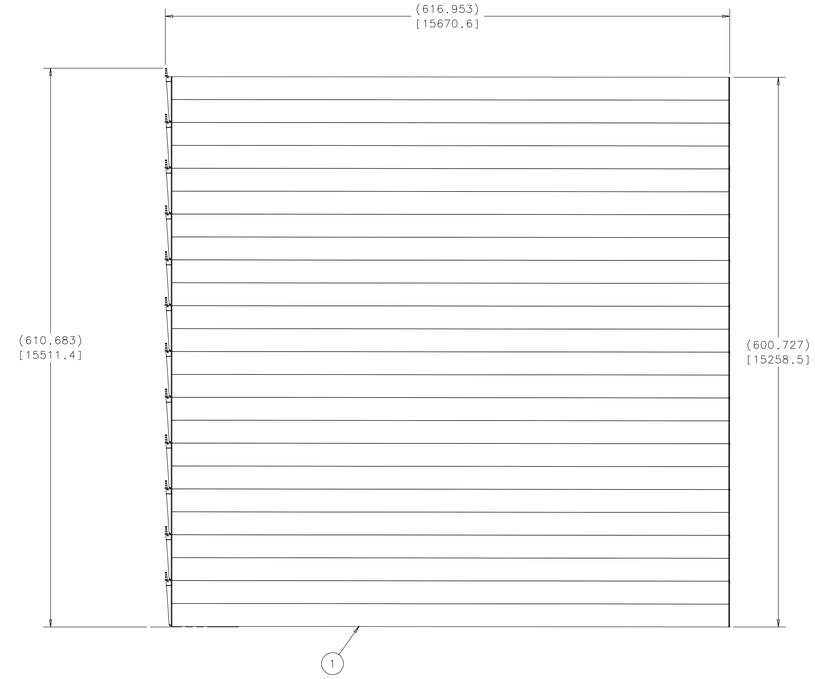

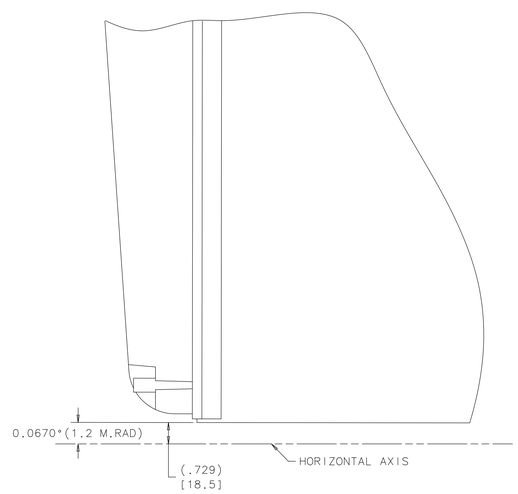

VIEW A
SCALE = 1/2

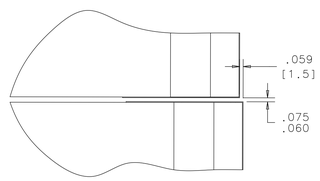

VIEW B
SCALE = 1/2

NOTES:

1. THIS DWG. IS FOR REFERENCE ONLY. ACTUAL ASSEMBLY OF PLANE WILL TAKE PLACE AT NEXT HIGHER ASSEMBLY; SEE DWG. ME-489028.

2. ESTIMATED WEIGHT IS 11,760 LBS.

ITEM	PART NO.	DESCRIPTION OR SIZE	QTY.
1	ME-489025	32 CELL HORIZ MODULE	12

PARTS LIST

UNLESS OTHERWISE SPECIFIED	ORIGINATOR	D.PUSHKA	08-FEB-2012
.XX .XXX ANGLES	DRAWN	J.RAUCH	08-FEB-2012
± .12 ± .060 ± 1°	CHECKED		
1. BREAK ALL SHARP EDGES .XX MAX.	APPROVED		
2. DO NOT SCALE DRAWING. 3. DIMENSIONS BASED UPON ASME Y14.5M-1994 4. MAX. ALL MACH. SURFACES XXX	USED ON	ME-489028	
5. DRAWING UNITS: U.S.INCH	MATERIAL	SEE PARTS LIST ABOVE	

FERMI NATIONAL ACCELERATOR LABORATORY
UNITED STATES DEPARTMENT OF ENERGY

NOVA-MODULE_ASSEMBLY
DETECTOR ASSEMBLY
12 MODULE HORIZONTAL PLANE

SCALE	DRAWING NUMBER	SHEET	REV
1/64 OR NOTED	3929.330-ME-489020	1 OF 1	

CREATED WITH : Ideas12NXSeries GROUP: PPD/MECHANICAL DEPARTMENT