REV	DESCRIPTION	DRAWN	DATE
		APPROVED	DATE

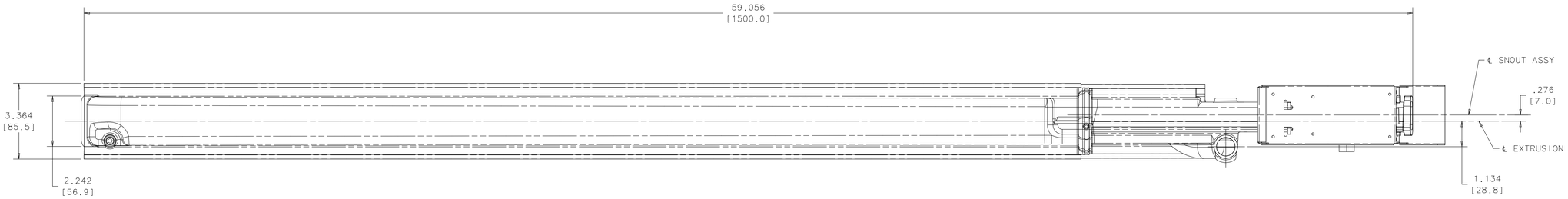

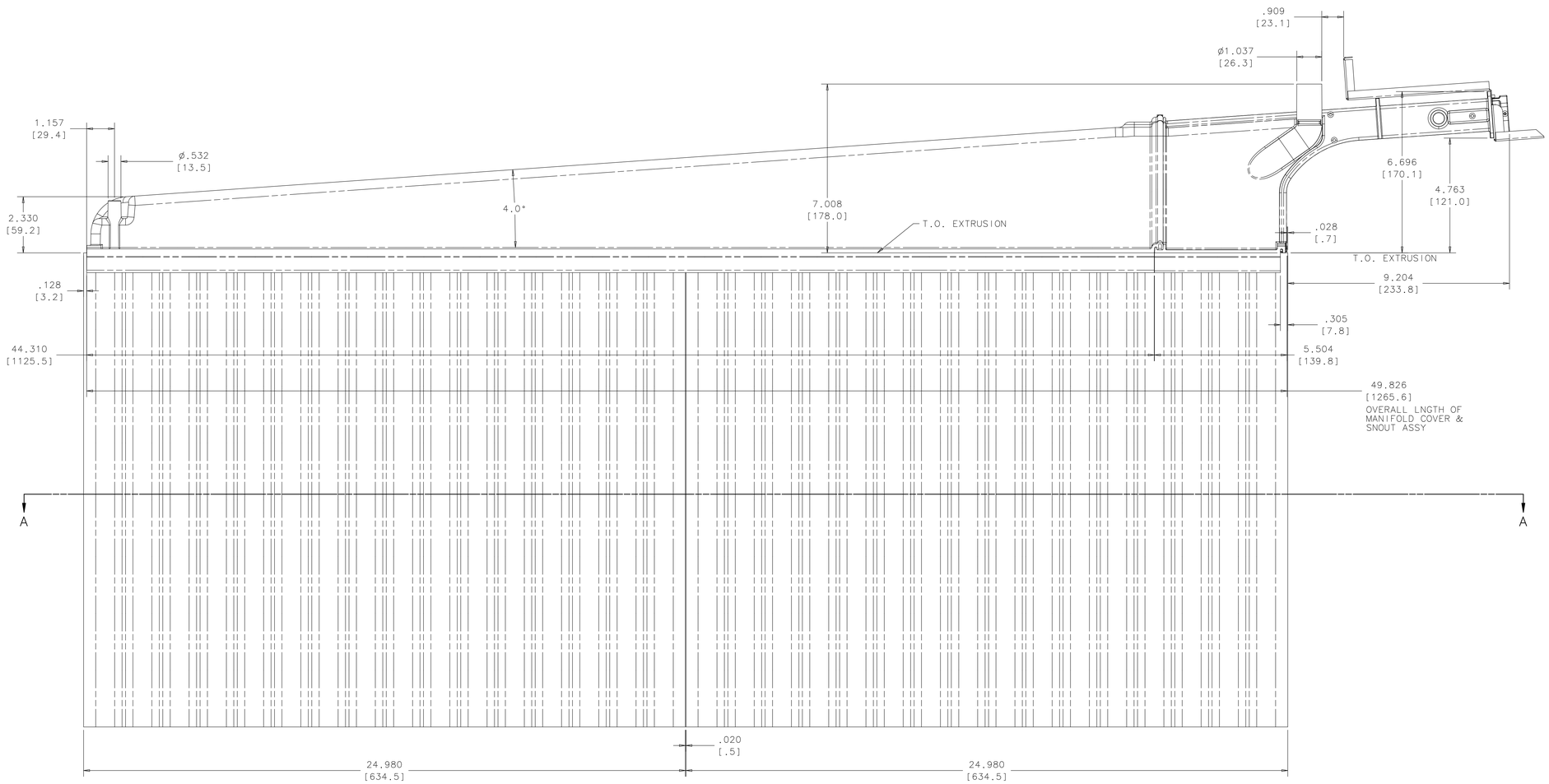

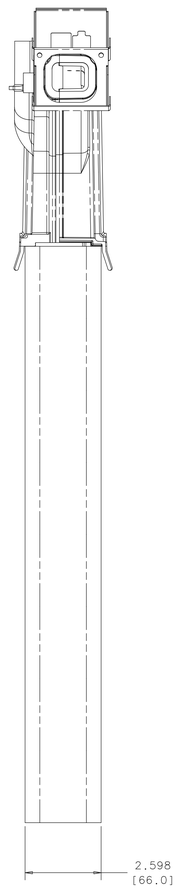

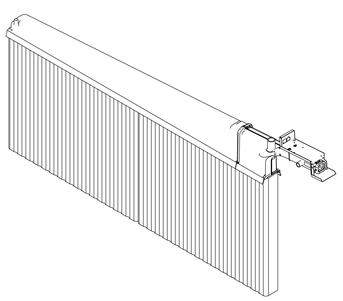

ISOMETRIC VIEW
SCALE: 1/8

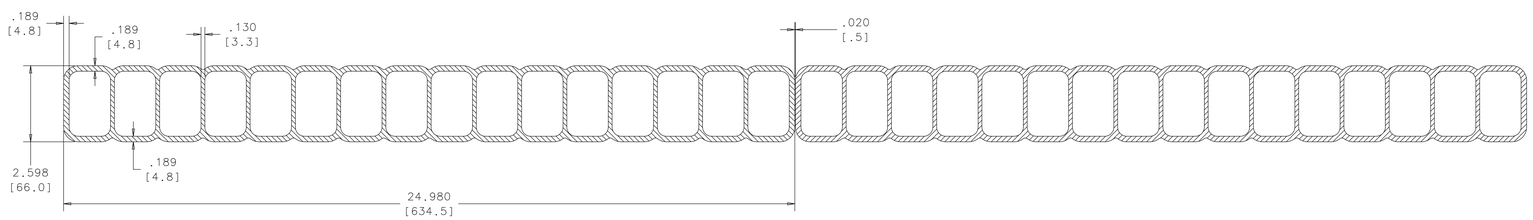

SECTION A-A

UNLESS OTHERWISE SPECIFIED	ORIGINATOR	D.FRIEND	28-MAR-2011
	DRAWN	D.FRIEND	28-MAR-2011
± ± ±	CHECKED		
1. BREAK ALL SHARP EDGES MAX.	APPROVED		
2. DO NOT SCALE DRAWING. 3. DIMENSIONS BASED UPON	USED ON		
4. MAX. ALL MACH. SURFACES √	MATERIAL		
5. DRAWING UNITS:			

FERMI NATIONAL ACCELERATOR LABORATORY
UNITED STATES DEPARTMENT OF ENERGY

NOVA-FAR_DETECTOR
PRELIMINARY DESIGN
MODULE ASSY W/4° MANIFOLD COVER

SCALE	DRAWING NUMBER	SHEET	REV
1:2 & AS NOTED	3929.330-ME-486915	1 OF 1	

CREATED WITH : Ideas12NXSeries GROUP: PPD/MECHANICAL DEPARTMENT