| REV | DESCRIPTION | DRAWN / APPROVED | DATE / DATE |
|---|---|---|---|
| A | ADDED DIMENSIONS. DIM. 23.250 WAS 22.750, 23.125 WAS 22.625. ITEM 4 THK. FROM .75 TO 1.00. | VIC MAJDANSKI | 13MAY2011 |
| | | E.VILLEGAS | 13MAY2011 |
| B | RELOCATED DATUM FEATURE. WELDING INFO MOVED FOR CLARITY. DIMENSIONS WERE .XXX | VIC MAJDANSKI | 08JUN2011 |
| | | E.VILLEGAS | 08JUN2011 |
| C | DIM. (0.1085") WAS (0.105") ADDED HOLES (4 X ø.375" THRU). | J.CATALANELLO | 09-DEC-2011 |
| | | D.FRIEND | 15-DEC-2011 |
| D | REVISED WELD SIZES. ADDED 3.75 REFERENCE DIMENSION. REVISED WALL THICKNESS OF ITEM 1 TO 5/16. | B.CYKO | 19-MAR-2012 |
| | | E.VILLEGAS | 21-MAR-2012 |
| E | WAS 3153LBS, ITEM 4 WAS 1.00 | J.RAUCH | 15-JUN-2012 |
| | THK, FOUR .375 SLOT WAS HOLE | E.VILLEGAS | 15-JUN-2012 |
| E2 | WELD WAS 1/2IL2-6, ITEM 6 WAS 4 QTY | J.RAUCH | 15-JUN-2012 |
| | 23.625WAS23.125,26.75WAS26.25 | E.VILLEGAS | 15-JUN-2012 |

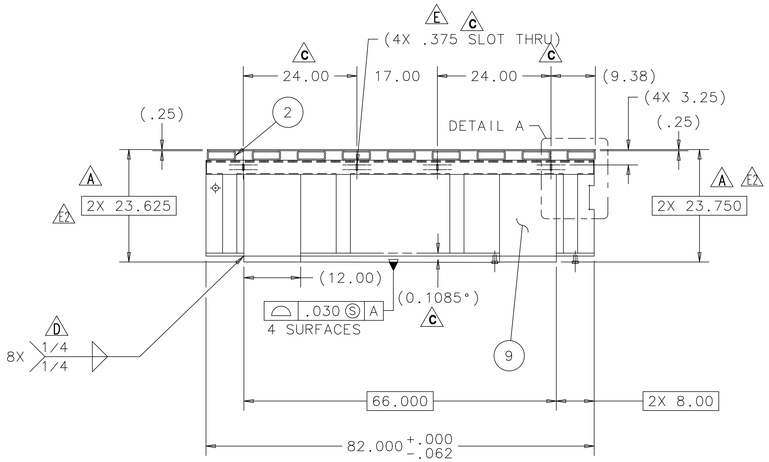


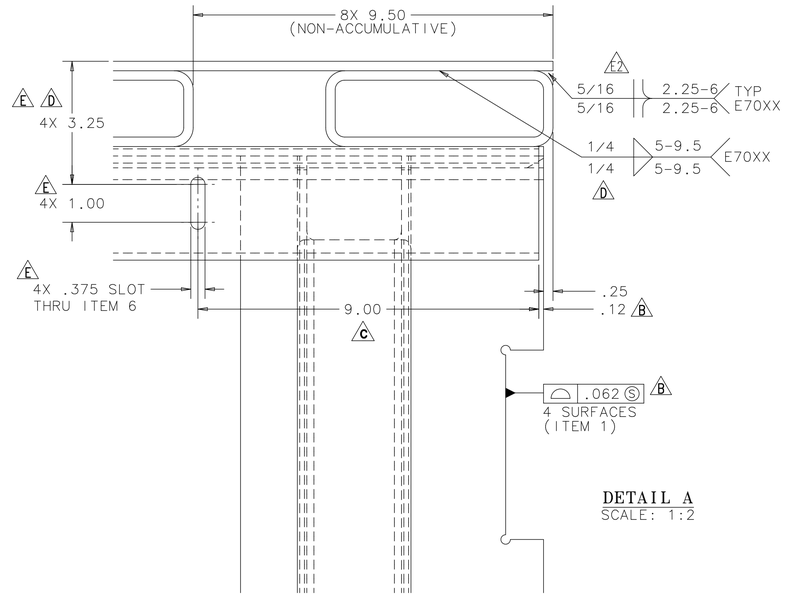


DETAIL A
SCALE: 1:2

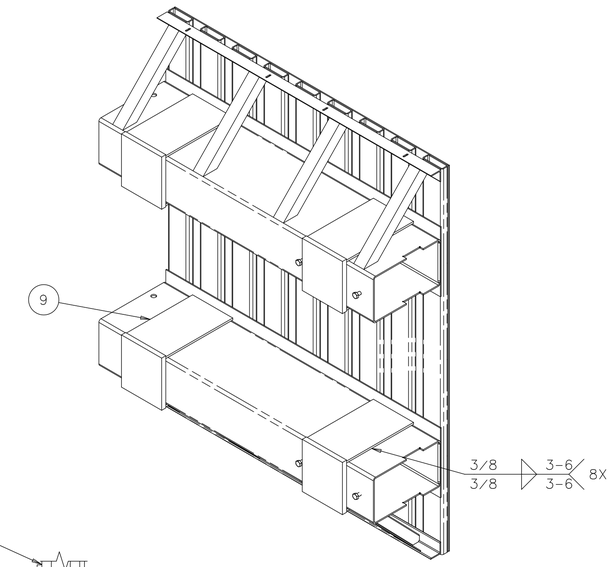


ISOMETRIC VIEW

EST WT.=3245 LBS

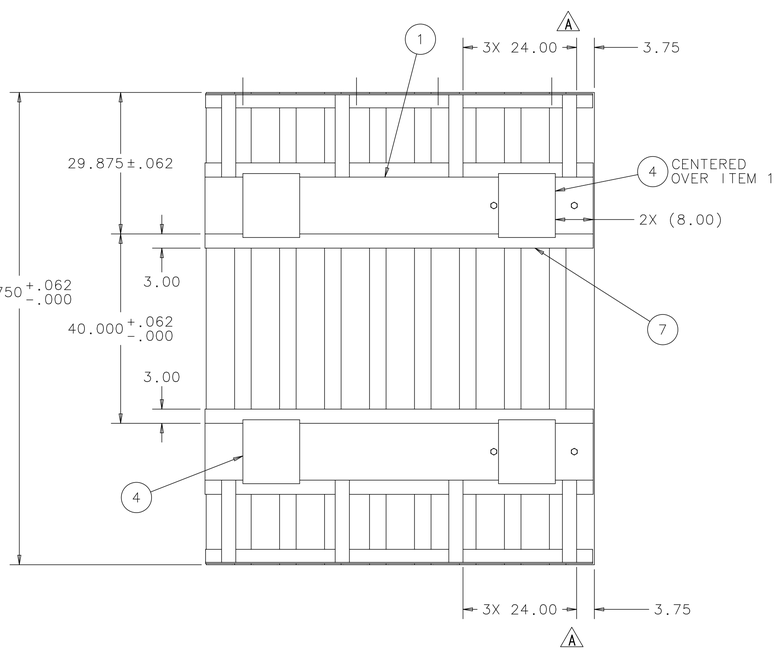


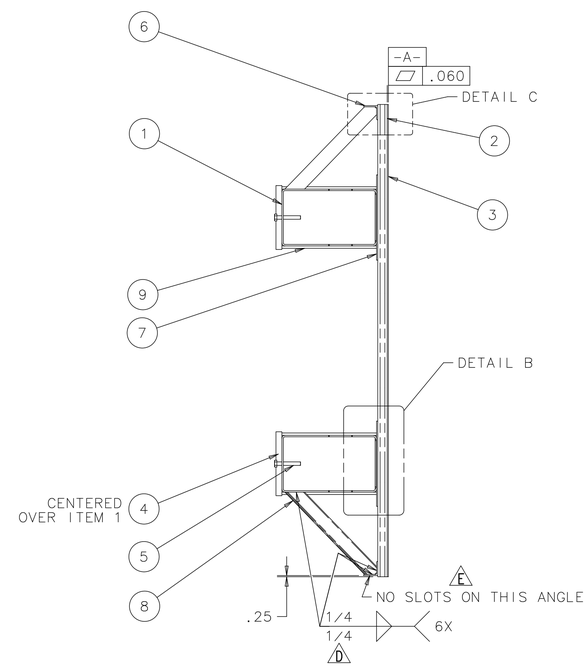


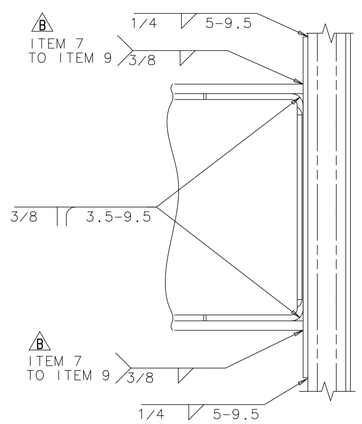


DETAIL B
SCALE: 1:4

| ITEM | PART NO. | DESCRIPTION OR SIZE | QTY. |
|---|---|---|---|
| 9 | COML | PLATE, 12.00 X 19.94 +.00/-.06 X .50 THK. ASTM A 36 STL. | 8 |
| 8 | MB-489066 | ANGLE, MOD 3 X 3 X 1/4 X 26 LG | 8 |
| 7 | COML | PLATE, 18.00 X 82.00 X 1/4 THK. STEEL ASTM A36 | 2 |
| 6 | COML | ANGLE, 3 X 3 X 1/4 THK. 81.75 LG ASTM A 36 STL. | 2 |
| 5 | COML | SCREW, HX HD. 3/4-10 UNC X 5.00 LG. ZINC COATED STL, FULLY THREADED | 4 |
| 4 | COML | PLATE, 12.00 X 13.50 X 1.50 THK. ASTM A 36 STL. | 4 |
| 3 | COML | PLATE, 99.75 X 82.00 X .25 THK. ASTM A 36 STL. | 1 |
| 2 | COML | TUBE, 6.00 X 2.00 X .25 WALL X 99.75 LG. ASTM A 500 GR B STL. | 9 |
| 1 | MD-486966 | TUBING STRUCTURAL 20X12X5/16X82.00 | 2 |

PARTS LIST

| UNLESS OTHERWISE SPECIFIED | | | | | |
|---|---|---|---|---|---|
| .XX | .XXX | ANGLES | ORIGINATOR | E.VILLEGAS | 01-FEB-2011 |
| ± .03 | ± .015 | ± --- | DRAWN | V.MAJDANSKI | 01-FEB-2011 |
| | | | CHECKED | J.RAUCH | 04-MAY-2011 |
| | | | APPROVED | E.VILLEGAS | 04-MAY-2011 |

1. BREAK ALL SHARP EDGES .015 MAX.
2. DO NOT SCALE DRAWING.
3. DIMENSIONS BASED UPON ASME Y14.5M-1994
4. MAX. ALL MACH. SURFACES 250
5. DRAWING UNITS: U.S. INCH

USED ON: ME-486926

MATERIAL: SEE PARTS LIST ABOVE

FERMI NATIONAL ACCELERATOR LABORATORY
UNITED STATES DEPARTMENT OF ENERGY

# NOVA-EQUIPMENT HANDLING AR TABLE PIVOT MODULE AR PALLET SEGMENT

| SCALE | DRAWING NUMBER | SHEET | REV |
|---|---|---|---|
| 1:16 & AS NOTED | 3929.220-MD-486833 | 1 OF 1 | E |

CREATED WITH : Ideas12NXSeries GROUP: PPD/MECHANICAL DEPARTMENT

NOTES:

1. ALL WELDS TO BE E70XX OR EQUIVALENT.
2. ALL WELDING SHALL BE IN ACCORDANCE WITH ANSI/AWS D1.1, "STRUCTURAL WELDING CODE - STEEL"
3. ALL WELDS SHALL BE MADE IN A SEQUENCE THAT WILL BALANCE THE APPLIED WELDING HEAT WHILE THE WELDING PROGRESSES. THE PROCEDURE AND SEQUENCE SHALL BE DESIGNED TO MINIMIZE DISTORTION AND SHRINKAGE STRESSES.
4. ALL WELDS SHALL BE VISUALLY INSPECTED AND DYE PENETRANT INSPECTED TO DETECT SURFACE AND SUBSURFACE CRACKS AND DISCONTINUITES IN ACCORDANCE WITH ANSI/AWS D1.1, "STRUCTURAL WELDING CODE - STEEL".
5. ALL WELDS THAT FAIL AN INSPECTION SHALL BE REPAIRED IN ACCORDANCE WITH ANSI/AWS D1.1, "STRUCTURAL WELDING CODE - STEEL".
6. PAINT WITH PRIMER, DAMP PROOF RUST-OLEUM NO 769.

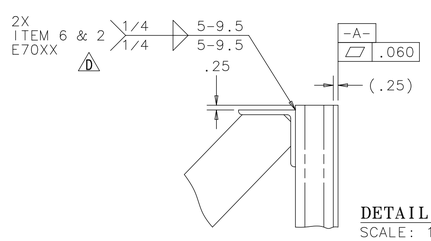


DETAIL C
SCALE: 1:4