REV	DESCRIPTION	DRAWN	DATE
		APPROVED	DATE

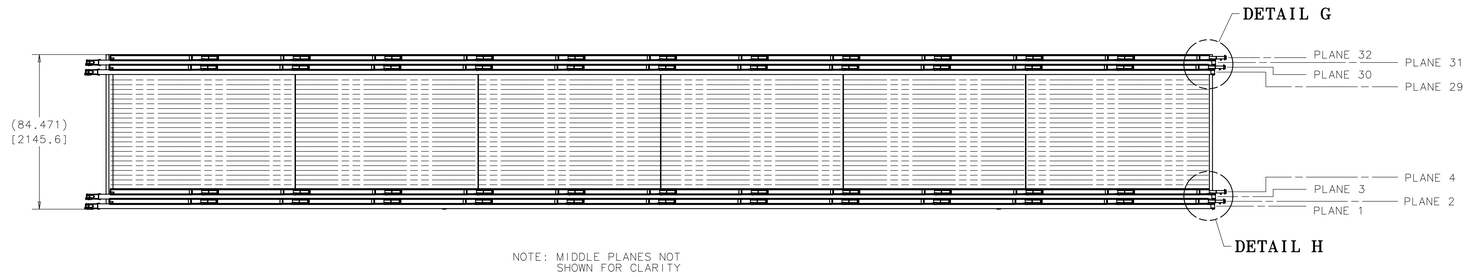

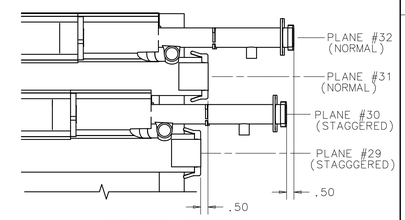

DETAIL G
STAGGERED PLANES
SCALE: 1/4

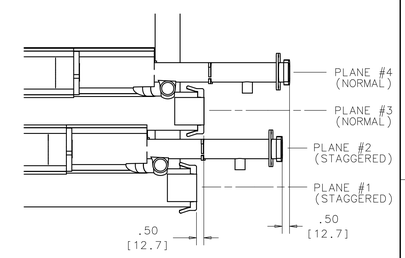

DETAIL H
STAGGERED PLANES
SCALE: 1/4

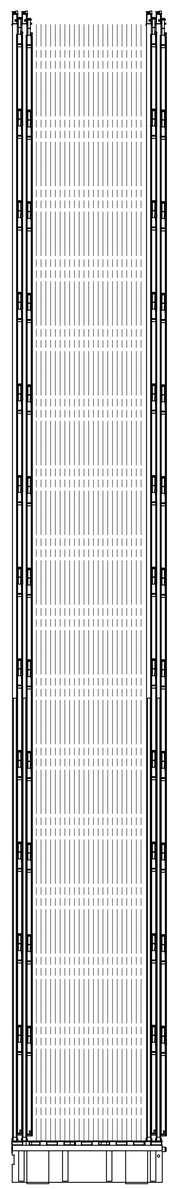

NOTE: MIDDLE PLANES NOT SHOWN FOR CLARITY

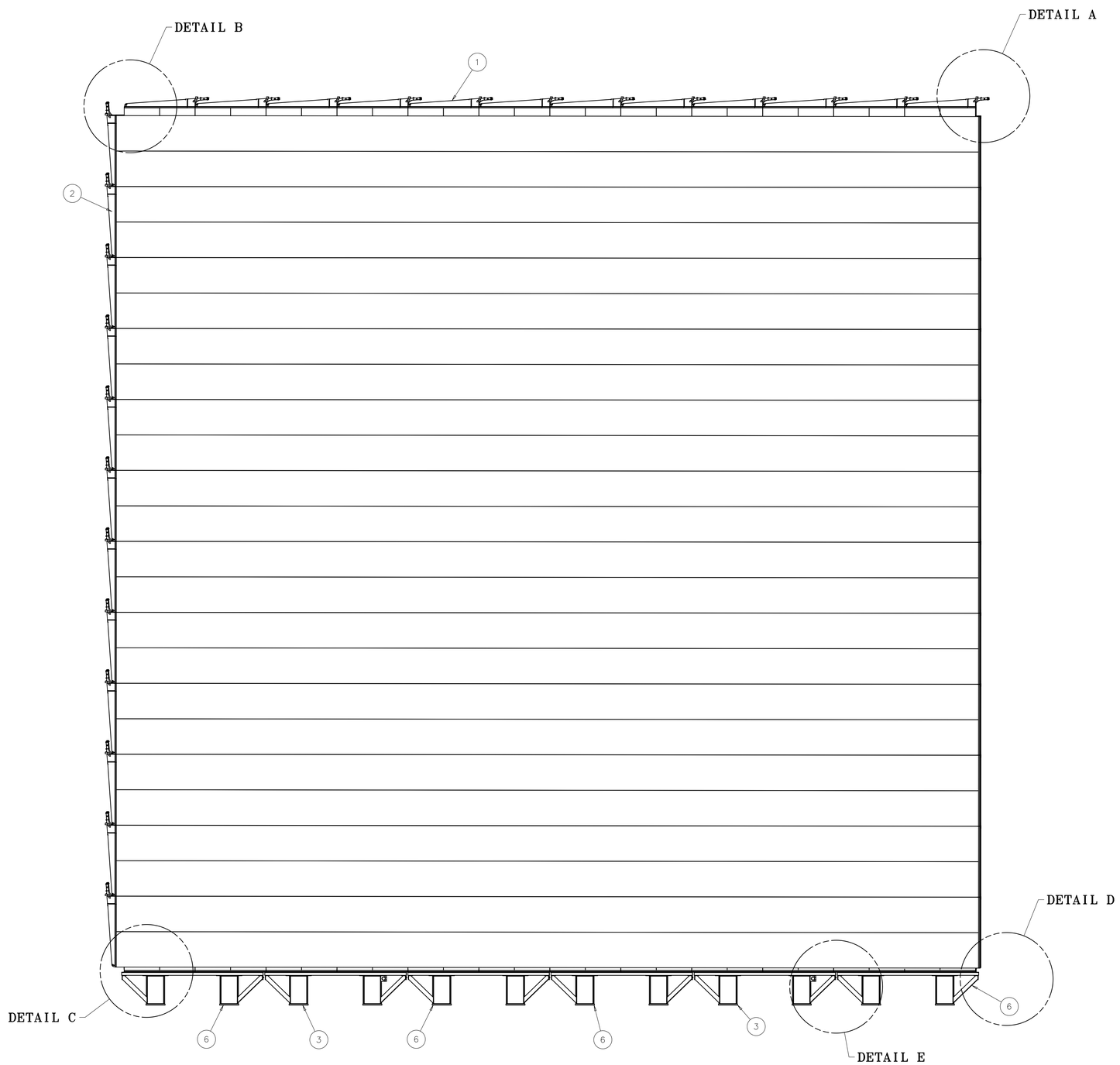

NOTES:

1. FOR STAGGERED PLANES SEE DETAILS ON SHEET 3.
2. FOR NORMAL PLANES SEE DETAILS ON SHEET 2.
3. STAGGERED PLANES CONSIST OF PLANES #1,2,5,6,9,10,13,14,17,18 21,22,25,26,29 & 30.
4. NORMAL PLANES CONSIST OF PLANES #3,4,7,8,11,12,15,16,19,20 23,24,27,28,31 & 32.
5. ESTIMATED WEIGHT = 395,782 LBS

ITEM	PART NO.	DESCRIPTION OR SIZE	QTY.
9	COML	1/2" HEX NUT, GRADE 8, C.S.	20
8	COML	FLAT WASHER, 1/2" BOLT, C.S.	40
7	COML	HEX HD CAP SCREW GRADE 8, 1/2" X 1 1/2" LG	20
6	MD-486833	AR PALLET SEGMENT	4
5	REF	FLEXANE 80 PUTTY	---
4	REF	PALLET SPLICE PLATE WELDMENT	10
3	MD-486995	AR PALLET-PIVOT SEGMENT	2
2	ME-489020	12 MODULE HORIZONTAL PLANE	16
1	ME-489024	12 MODULE VERTICLE PLANE	16

PARTS LIST

UNLESS OTHERWISE SPECIFIED			ORIGINATOR	E.VILLEGAS	18-JAN-2012
.XX	.XXX	ANGLES	DRAWN	B.ELLISON	18-JAN-2012
± .12	± ---	± ---	CHECKED		
			APPROVED		

1. BREAK ALL SHARP EDGES MAX.
2. DO NOT SCALE DRAWING.
3. DIMENSIONS BASED UPON ASME Y14.5M-1994
4. MAX. ALL MACH. SURFACES
5. DRAWING UNITS: U.S. INCH

USED ON

MATERIAL
SEE PARTS LIST ABOVE

FERMI NATIONAL ACCELERATOR LABORATORY
UNITED STATES DEPARTMENT OF ENERGY

NOVA-DETECTOR PROTOTYPE FAR DETECTOR 32 PLANE BLOCK ASSY - STAGGERED

SCALE	DRAWING NUMBER	SHEET	REV
1:32 & AS NOTED	3929.330-ME-489028	1 OF 3	

CREATED WITH : Ideas12NXSeries | GROUP: PPD/MECHANICAL DEPARTMENT

REV	DESCRIPTION	DRAWN	DATE
		APPROVED	DATE

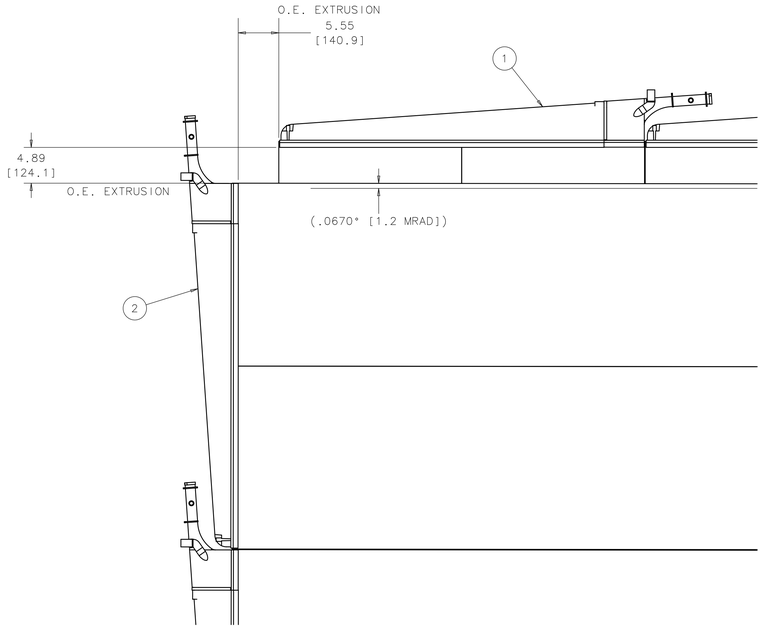

DETAIL B
NORMAL PLANE
SCALE: 1:8

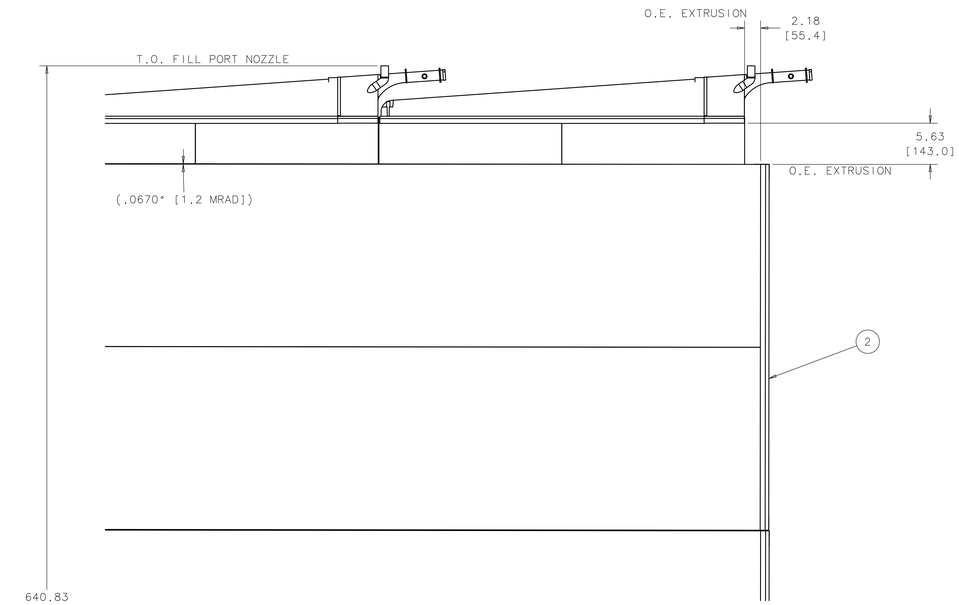

DETAIL A
NORMAL PLANE
SCALE: 1:8

640.83
[16277.1]

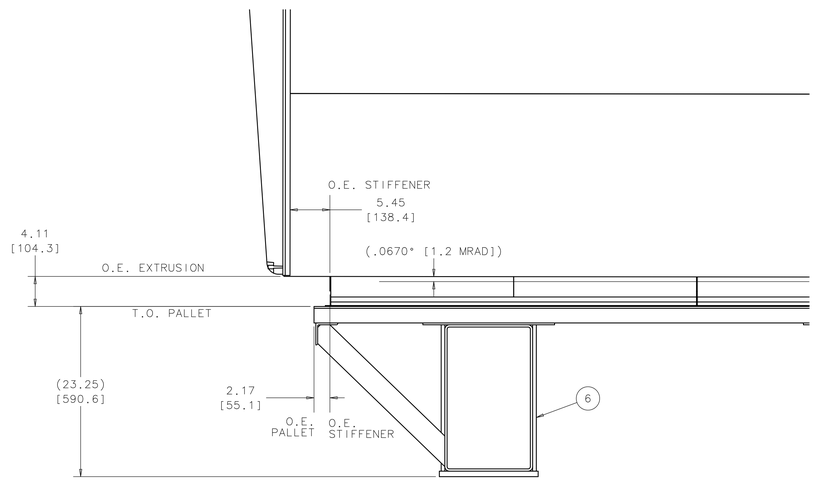

DETAIL C
NORMAL PLANE
SCALE: 1:8

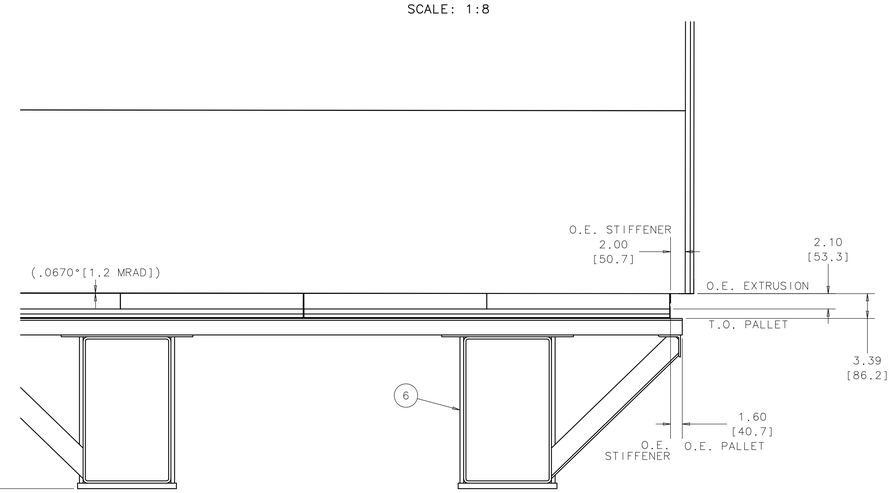

DETAIL D
NORMAL PLANE
SCALE: 1:8

NORMAL PLANES
(3,4,7,8,11,12,15,16
19,20,23,24,27,28,31,32)
SPACING DETAILS

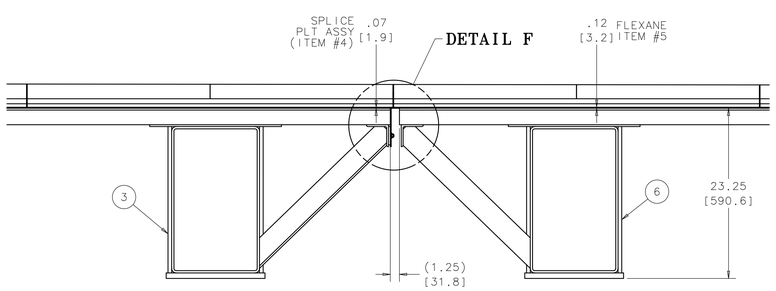

DETAIL E
SCALE: 1:8

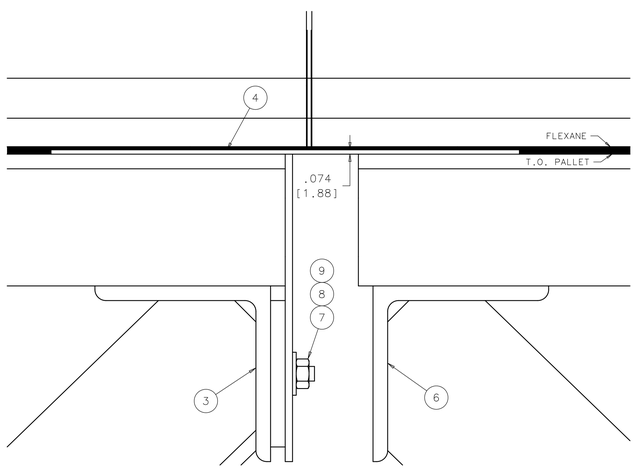

DETAIL F
SCALE: 1:1

UNLESS OTHERWISE SPECIFIED			ORIGINATOR	E.VILLEGAS	18-JAN-2012
.XX	.XXX	ANGLES	DRAWN	B.ELLISON	18-JAN-2012
± .12	± ---	± ---	CHECKED		
			APPROVED		

1. BREAK ALL SHARP EDGES MAX.
2. DO NOT SCALE DRAWING.
3. DIMENSIONS BASED UPON ASME Y14.5M-1994
4. MAX. ALL MACH. SURFACES
5. DRAWING UNITS: U.S. INCH

USED ON

MATERIAL
SEE PARTS LIST ABOVE

FERMI NATIONAL ACCELERATOR LABORATORY
UNITED STATES DEPARTMENT OF ENERGY

NOVA-DETECTOR PROTOTYPE
FAR DETECTOR
32 PLANE BLOCK ASSY - STAGGERED

SCALE	DRAWING NUMBER	SHEET	REV
1:32 & AS NOTED	3929.330-ME-489028	2 OF 3	

CREATED WITH : Ideas12NXSeries GROUP: PPD/MECHANICAL DEPARTMENT

Created: 11:05:04 on 18-01-12 (D-M-Y) By: friend State: 1-INITIAL

REV	DESCRIPTION	DRAWN	DATE
		APPROVED	DATE

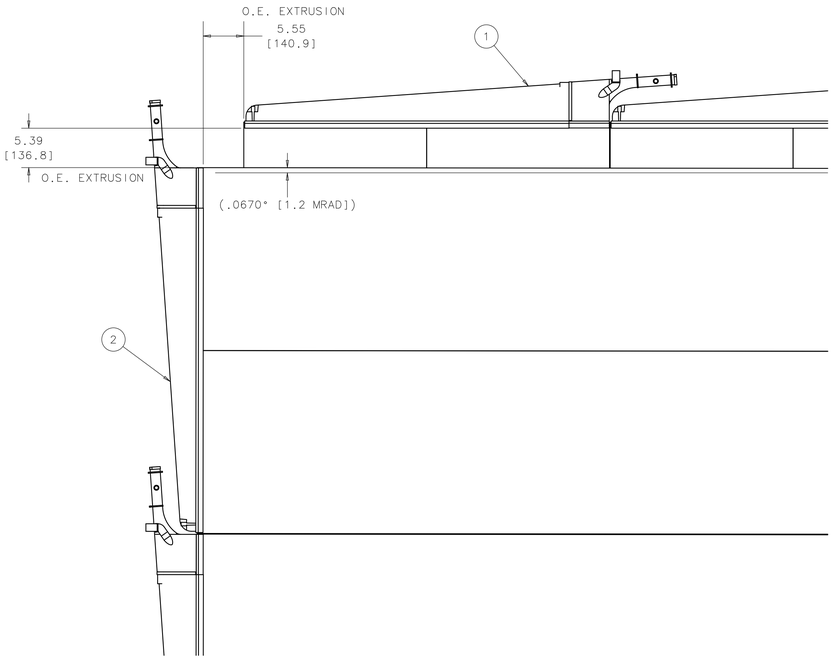

DETAIL B
STAGGERED PLANE
SCALE = 1:8

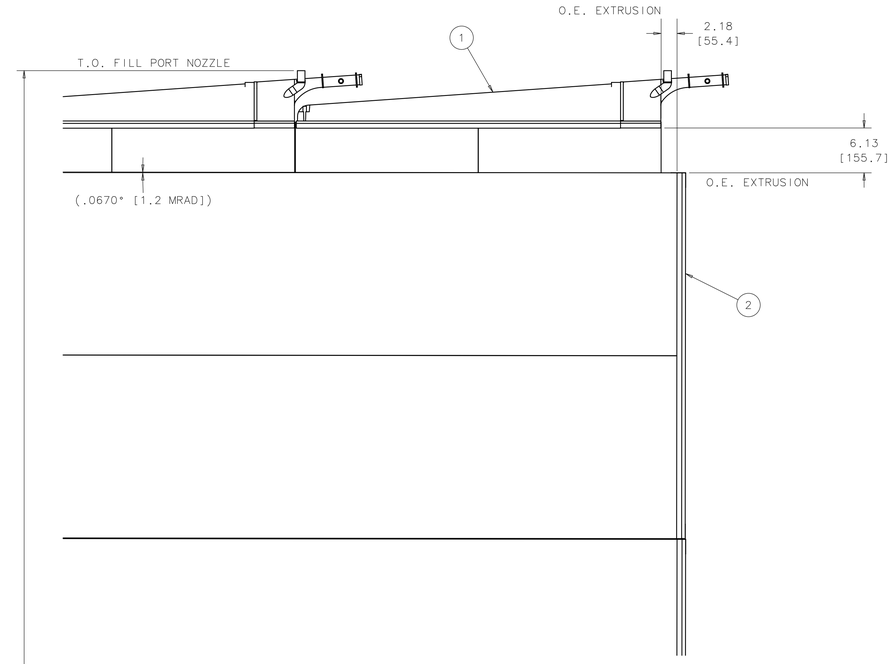

DETAIL A
STAGGERED PLANE
SCALE = 1:8

640.83
[16277.1]

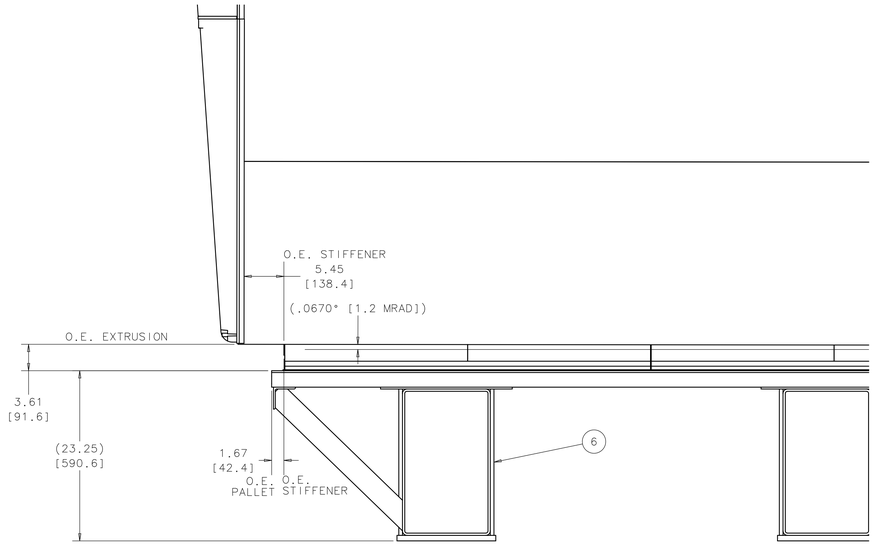

DETAIL C
STAGGERED PLANE
SCALE = 1:8

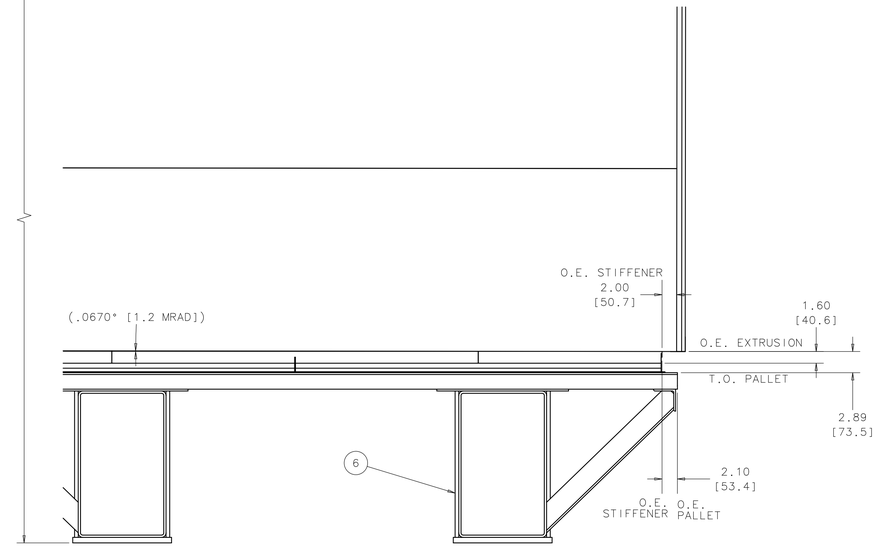

DETAIL D
STAGGERED PLANE
SCALE = 1:8

STAGGERED PLANES
(1,2,5,6,13,14,17,18
21,22,25,26,29,30)
SPACING DETAILS

UNLESS OTHERWISE SPECIFIED			ORIGINATOR	E.VILLEGAS	18-JAN-2012
.XX	.XXX	ANGLES	DRAWN	B.ELLISON	18-JAN-2012
± .12	± ---	± ---	CHECKED		
			APPROVED		

1. BREAK ALL SHARP EDGES MAX.
2. DO NOT SCALE DRAWING.
3. DIMENSIONS BASED UPON ASME Y14.5M-1994
4. MAX. ALL MACH. SURFACES
5. DRAWING UNITS: U.S. INCH

USED ON

MATERIAL
SEE PARTS LIST ABOVE

FERMI NATIONAL ACCELERATOR LABORATORY
UNITED STATES DEPARTMENT OF ENERGY

NOVA-DETECTOR PROTOTYPE
FAR DETECTOR
32 PLANE BLOCK ASSY - STAGGERED

SCALE	DRAWING NUMBER	SHEET	REV
1:32 & AS NOTED	3929.330-ME-489028	3 OF 3	

CREATED WITH : Ideas12NXSeries GROUP: PPD/MECHANICAL DEPARTMENT

Created: 11:05:11 on 18-01-12 (D-M-Y) By: friend State: 1-INITIAL