REV	DESCRIPTION	DRAWN	DATE
		APPROVED	DATE

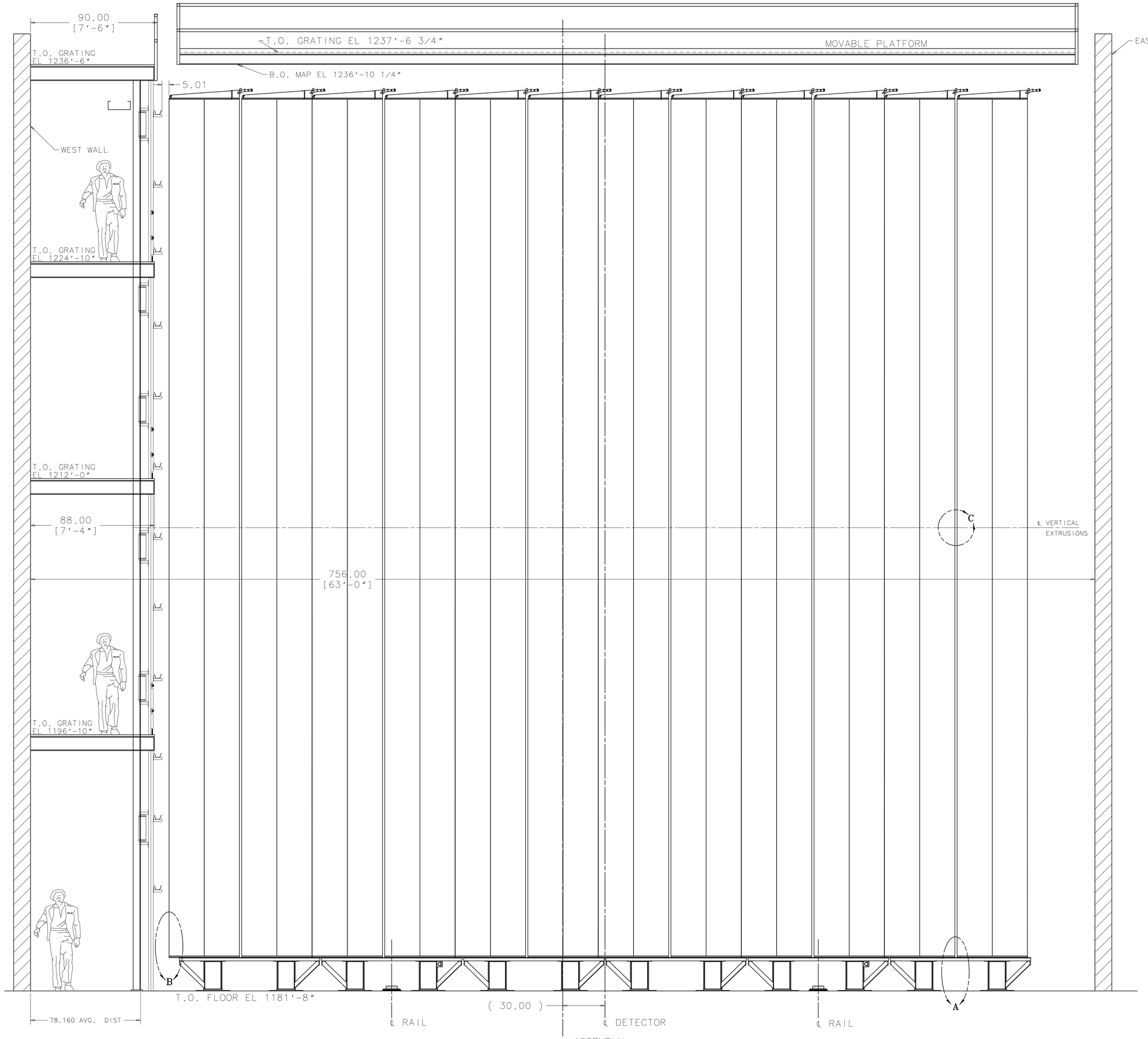

VERTICAL PLANE CAMBER LAYOUT

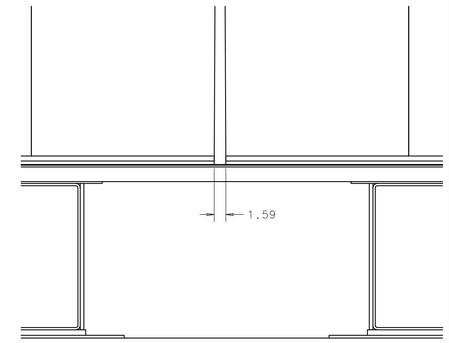

DETAIL A
SCALE: 1/8

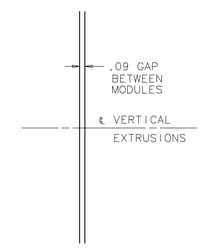

DETAIL C
SCALE: 1

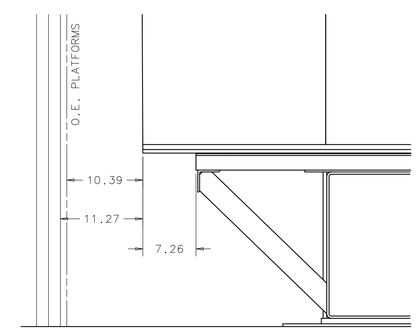

DETAIL B
SCALE: 1/8

ITEM	PART NO.	DESCRIPTION OR SIZE	QTY.

PARTS LIST

UNLESS OTHERWISE SPECIFIED			ORIGINATOR	D.FRIEND	14-OCT-2011
.XX	.XXX	ANGLES	DRAWN	D.FRIEND	14-OCT-2011
± ---	± ---	± ---	CHECKED		
			APPROVED		

1. BREAK ALL SHARP EDGES MAX.
2. DO NOT SCALE DRAWING.
3. DIMENSIONS BASED UPON ASME Y14.5M-1994
4. MAX. ALL MACH. SURFACES
5. DRAWING UNITS: U.S. INCH

USED ON

MATERIAL

FERMI NATIONAL ACCELERATOR LABORATORY
UNITED STATES DEPARTMENT OF ENERGY

NOVA-PRELIMINARY_DESIGN
CONCEPTUAL LAYOUT
BLOCK CAMBER TOLERANCE STACKUP

SCALE	DRAWING NUMBER	SHEET	REV
1/2" = 1' & NOTED	3929.000-ME-489373	1 OF 2	

CREATED WITH : Ideas12NXSeries GROUP: PPD/MECHANICAL DEPARTMENT

Created: 09:11:01 on 14-10-11 (D-M-Y) By: friend State: 1-INITIAL

REV	DESCRIPTION	DRAWN	DATE
		APPROVED	DATE

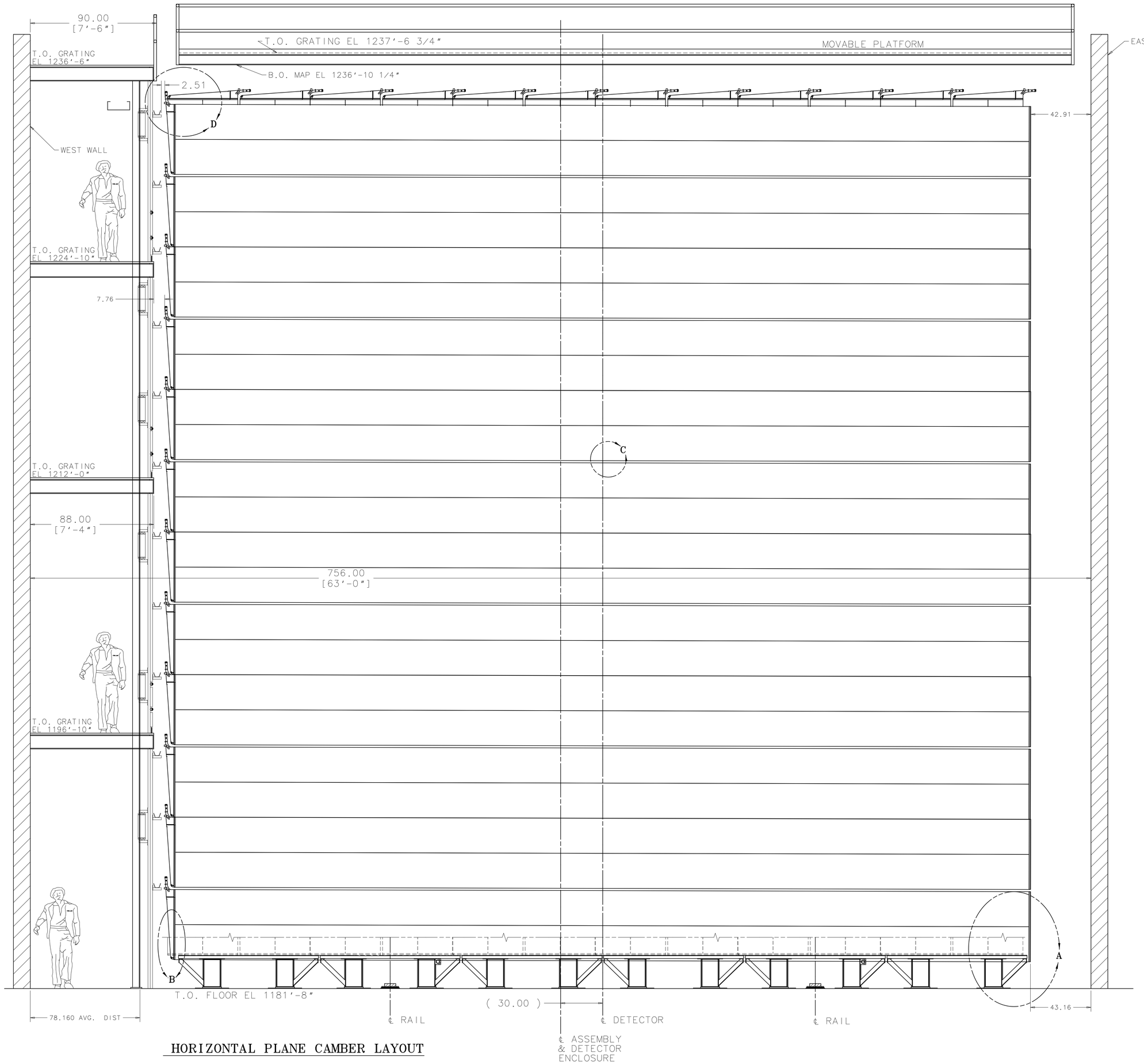

HORIZONTAL PLANE CAMBER LAYOUT

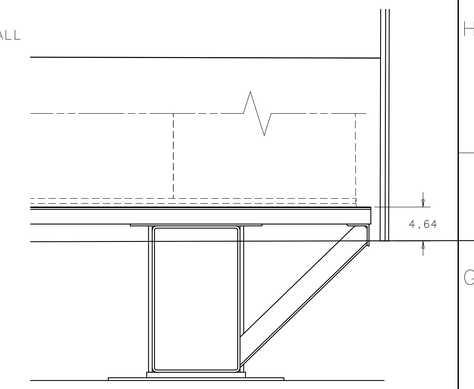

DETAIL A
SCALE: 1/8

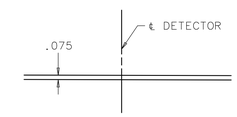

DETAIL C
SCALE: FULL

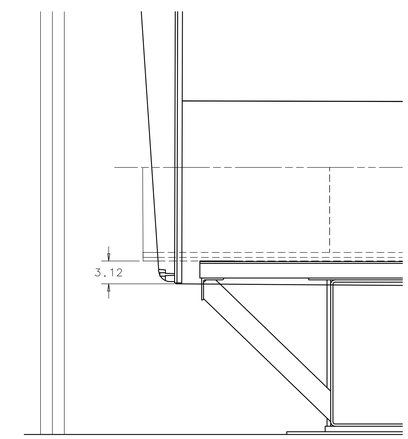

DETAIL B
SCALE: 1:8

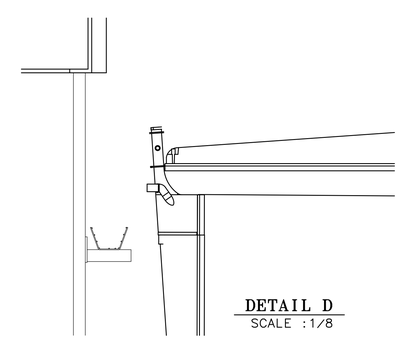

DETAIL D
SCALE :1/8

ITEM	PART NO.	DESCRIPTION OR SIZE	QTY.

PARTS LIST

UNLESS OTHERWISE SPECIFIED			ORIGINATOR	D.FRIEND	14-OCT-2011
.XX	.XXX	ANGLES	DRAWN	D.FRIEND	14-OCT-2011
± ---	± ---	± ---	CHECKED		
1. BREAK ALL SHARP EDGES MAX.			APPROVED		
2. DO NOT SCALE DRAWING. 3. DIMENSIONS BASED UPON ASME Y14.5M-1994 4. MAX. ALL MACH. SURFACES			USED ON		
5. DRAWING UNITS: U.S.INCH			MATERIAL		

FERMI NATIONAL ACCELERATOR LABORATORY
UNITED STATES DEPARTMENT OF ENERGY

NOVA-PRELIMINARY_DESIGN
CONCEPTUAL LAYOUT
BLOCK CAMBER TOLERANCE STACKUP

SCALE	DRAWING NUMBER	SHEET	REV
1/2" = 1' & NOTED	3929.000-ME-489373	2 OF 2	

CREATED WITH : Ideas12NXSeries GROUP: PPD/MECHANICAL DEPARTMENT