| REV | DESCRIPTION | DRAWN | DATE |
|---|---|---|---|
| | | APPROVED | DATE |

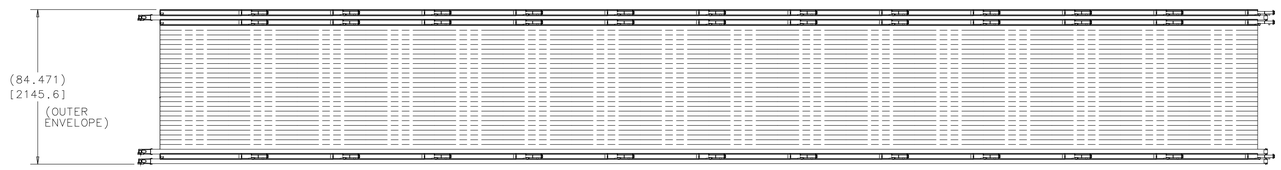


NOTE: MIDDLE PLANES NOT
SHOWN FOR CLARITY

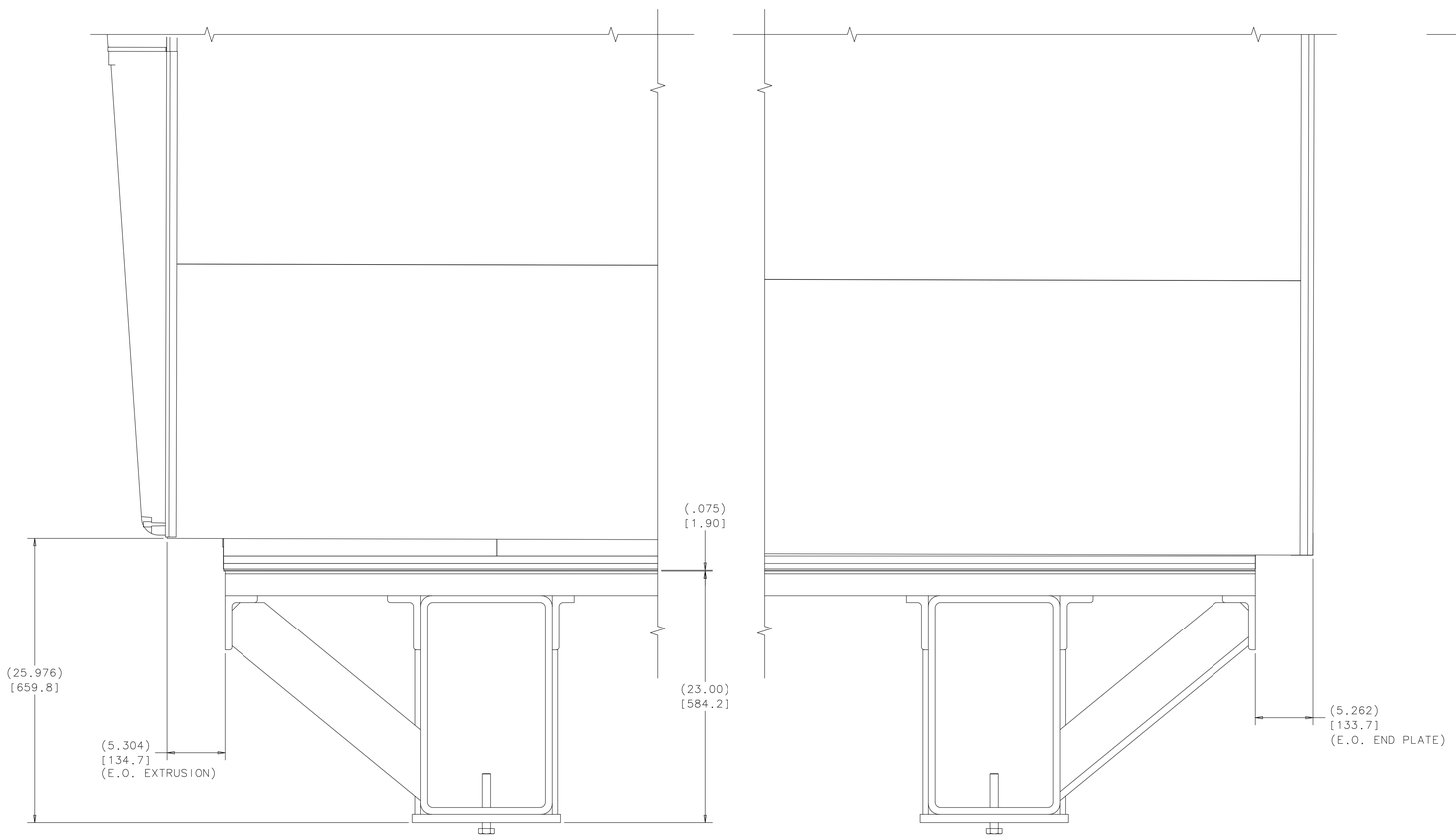


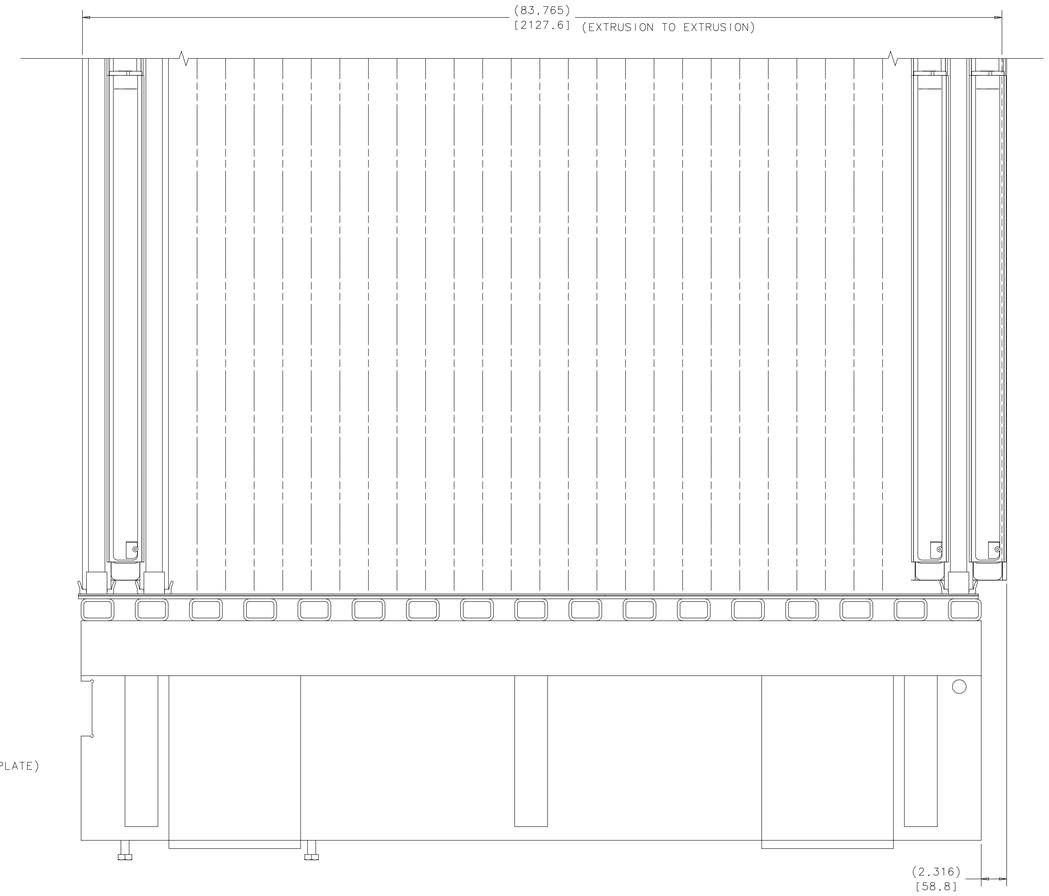


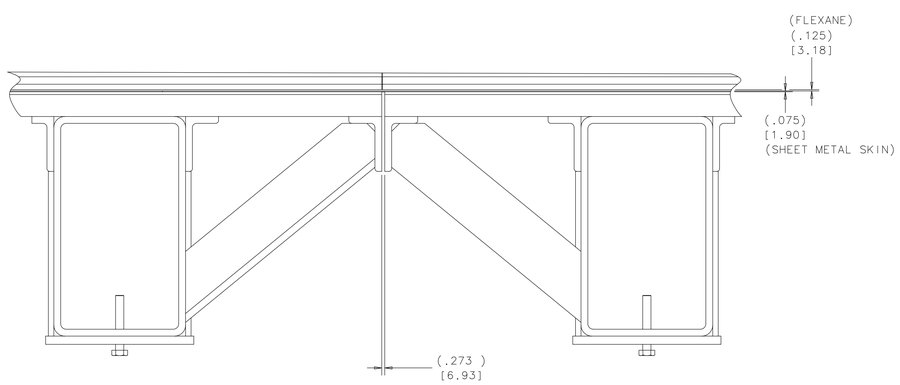


DISTANCE BETWEEN PALLETS

| UNLESS OTHERWISE SPECIFIED | | | ORIGINATOR | E.VILLEGAS | 08-APR-2011 |
|---|---|---|---|---|---|
| .XX | .XXX | ANGLES | DRAWN | B.ELLISON | 08-APR-2011 |
| ± •• | ± ••• | ± ••• | CHECKED | | |
| 1. BREAK ALL SHARP EDGES .015 MAX. 2. DO NOT SCALE DRAWING. 3. DIMENSIONS BASED UPON ASME Y14.5M-1994 4. MAX. ALL MACH. SURFACES √ 5. DRAWING UNITS: U.S. INCH | | | APPROVED | | |
| | | | USED ON | | |
| | | | MATERIAL | | |

FERMI NATIONAL ACCELERATOR LABORATORY
UNITED STATES DEPARTMENT OF ENERGY

# NOVA-DETECTOR PROTOTYPE FAR DETECTOR 32 PLANE BLK & PALLET LAYOUT

| SCALE | DRAWING NUMBER | SHEET | REV |
|---|---|---|---|
| NONE | 3929.330-ME-489031 | 1 OF 1 | |

CREATED WITH : Ideas12NXSeries GROUP: PPD/MECHANICAL DEPARTMENT