REV	DESCRIPTION	DRAWN	DATE
		APPROVED	DATE

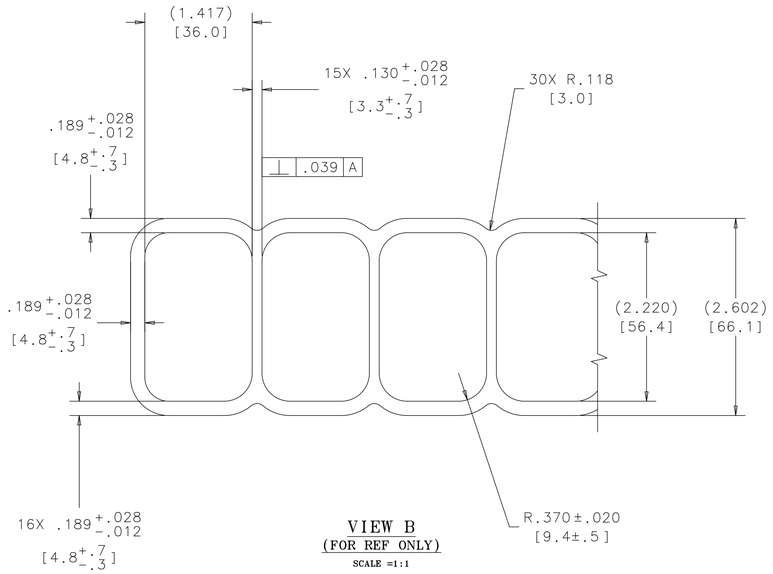

VIEW B
(FOR REF ONLY)
SCALE =1:1

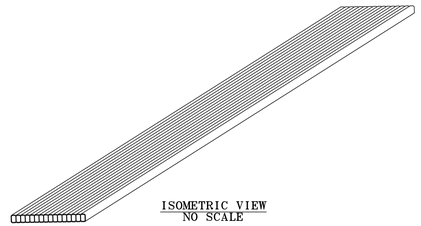

ISOMETRIC VIEW
NO SCALE

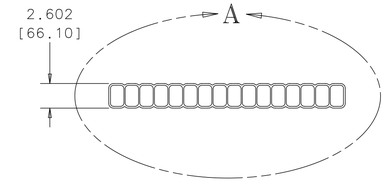

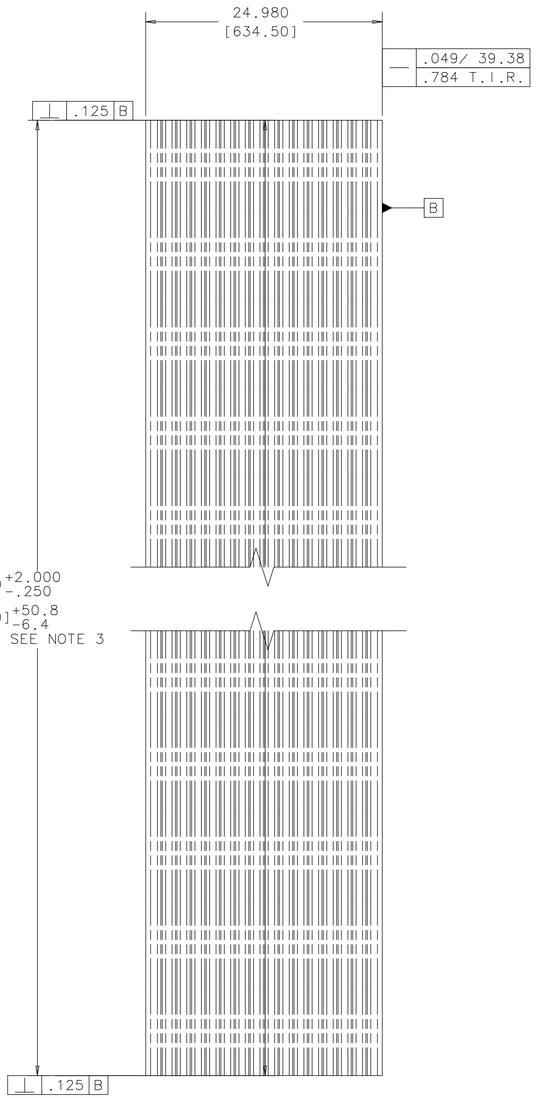

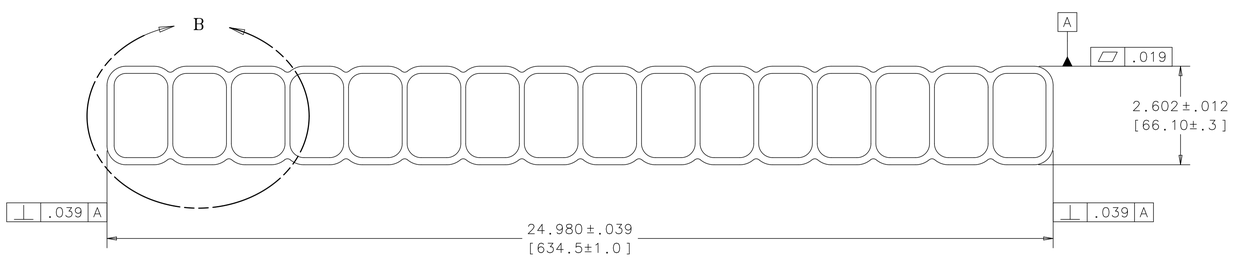

VIEW A
SCALE =1:2

5. EST. WEIGHT= 484 LBS

4. SEE DWG. #444189 FOR EXTRUSION DIE PROFILE

3. LENGTH AS DELIVERED FROM EXTRUDER MANUFACTURER

2. TOTAL LIQUID SCINTILLATOR CROSS SECTIONAL AREA IS 48.548 sq/in (31,321.230 sq mm)

1. EXTRUSION CROSS SECTIONAL AREA (PVC ONLY) IS 14,680 sq/in (9,470.949 sq mm)

NOTES:

UNLESS OTHERWISE SPECIFIED			ORIGINATOR	E.VILLEGAS	06-APR-2011
.XX	.XXX	ANGLES	DRAWN	S.HENTSCHEL	06-APR-2011
± ---	± .020	± X	CHECKED		
1. BREAK ALL SHARP EDGES .015 MAX. 2. DO NOT SCALE DRAWING. 3. DIMENSIONS BASED UPON ASME Y14.5M-1994 4. MAX. ALL MACH. SURFACES 125 5. DRAWING UNITS:U.S. INCH			APPROVED		
			USED ON	MC-489026	
			MATERIAL	PVC (POLYVINYL CHLORIDE)	

FERMI NATIONAL ACCELERATOR LABORATORY
UNITED STATES DEPARTMENT OF ENERGY

NOVA-MECHANICAL
MODULE ASSEMBLY
16 CELL EXTRUSION

SCALE	DRAWING NUMBER	SHEET	REV
1:8 NOTED	3929.330-MD-489027	1 OF 1	

CREATED WITH : Ideas12NXSeries | GROUP: PPD/MECHANICAL DEPARTMENT

Created: 09:29:16 on 13-04-11 (D-M-Y) By: friend State: 1-INITIAL