REV	DESCRIPTION	DRAWN	DATE
		APPROVED	DATE

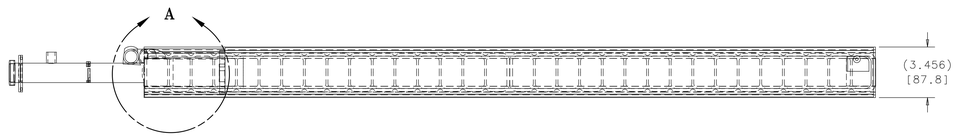

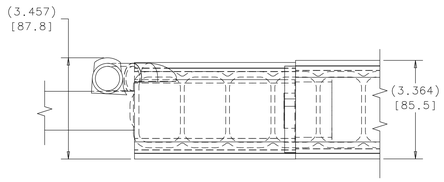

DETAIL A
SCALE = 1:2

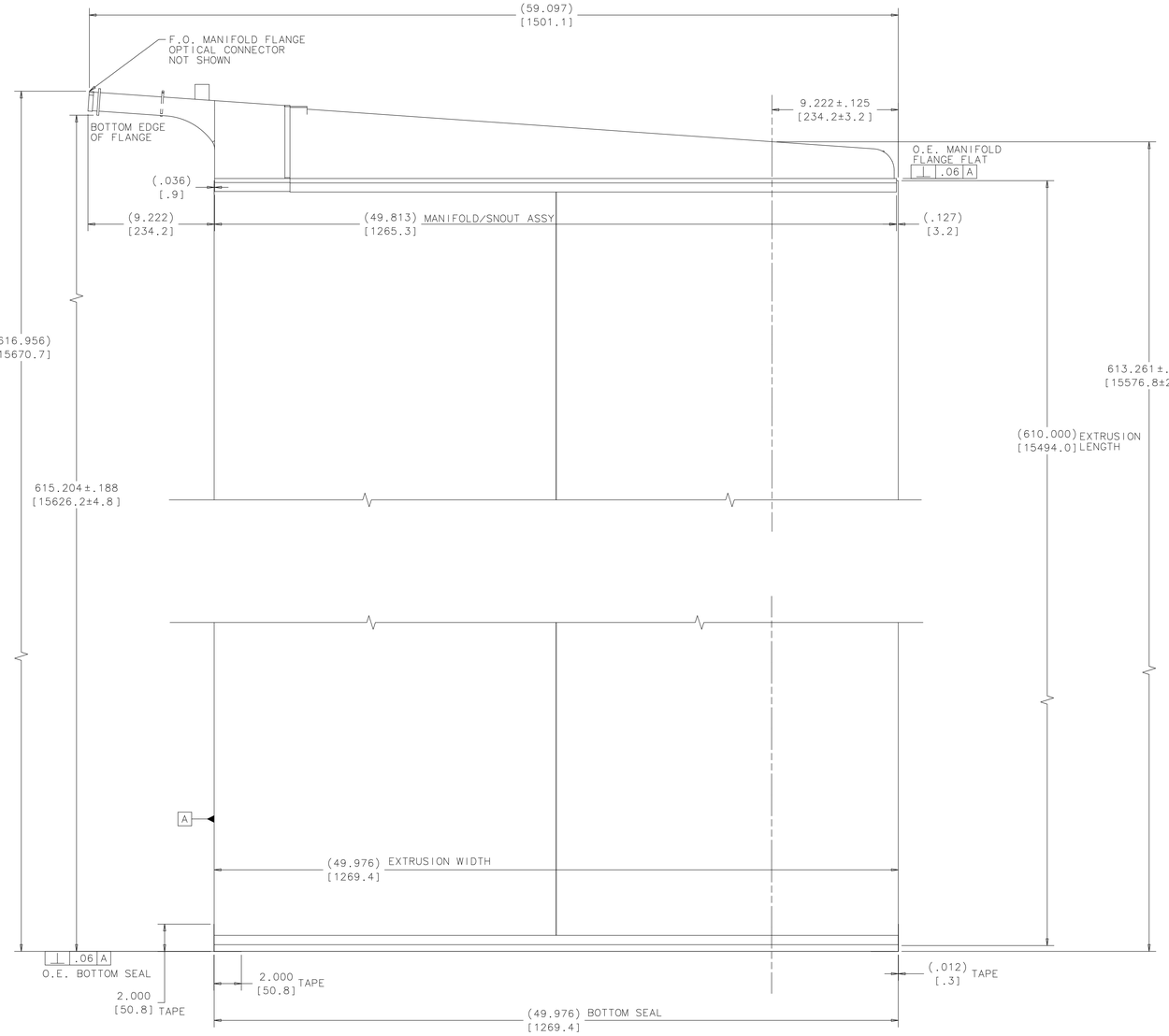

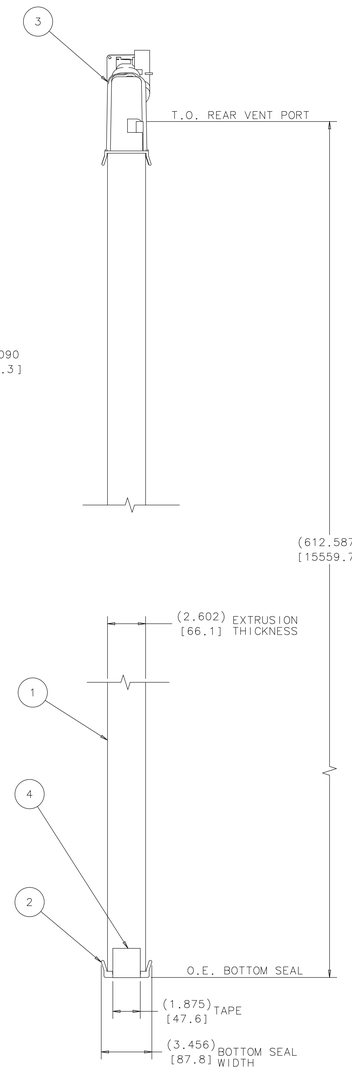

ENLARGED CORNERS
SCALE = 1:4

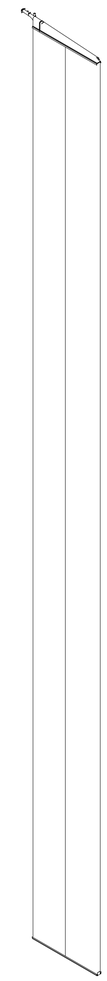

ISOMETRIC VIEW
SCALE = 1:32

NOTES:
1. ALL INTERNAL PIECE PARTS/SUB-ASSEMBLIES, MANIFOLD PARTS/SUB-ASSEMBLIES, AND BOTTOM SEAL PARTS/SUB-ASSEMBLIES, ARE AS PROVIDED BY THE UNIV. OF MINNESOTA.
2. ESTIMATED WEIGHT IS 976 LBS.

ITEM	PART NO.	DESCRIPTION OR SIZE	QTY.
4	MCMASTER-CARR 76585A66	TAPE, FIBERGLASS MESH 1.88" X 4.00" X .010"	AS REQD
3		VERTICAL MANIFOLD-SEE NOTE 1	1
2		BOTTOM SEAL VERTICAL-SEE NOTE 1	1
1	MD-489026	16 CELL GLUED EXTRUSION	2

PARTS LIST

UNLESS OTHERWISE SPECIFIED			ORIGINATOR	D.PUSHKA	05-APR-2011
.XX	.XXX	ANGLES	DRAWN	J.RAUCH	05-APR-2011
± ---	± .060	± ---	CHECKED		
			APPROVED		

1. BREAK ALL SHARP EDGES -- MAX.
2. DO NOT SCALE DRAWING.
3. DIMENSIONS BASED UPON ASME Y14.5M-1994
4. MAX. ALL MACH. SURFACES --
5. DRAWING UNITS: U.S. INCH

USED ON: ME-489020 & ME-489024

MATERIAL: SEE PARTS LIST ABOVE

FERMI NATIONAL ACCELERATOR LABORATORY
UNITED STATES DEPARTMENT OF ENERGY

NOVA-MODULE_ASSEMBLY
DETECTOR ASSEMBLY
32 CELL MODULE

SCALE	DRAWING NUMBER	SHEET	REV
1:32 & NOTED	3929.330-ME-489025	1 OF 1	

CREATED WITH : Ideas12NXSeries GROUP: PPD/MECHANICAL DEPARTMENT