REV	DESCRIPTION	DRAWN	DATE
		APPROVED	DATE

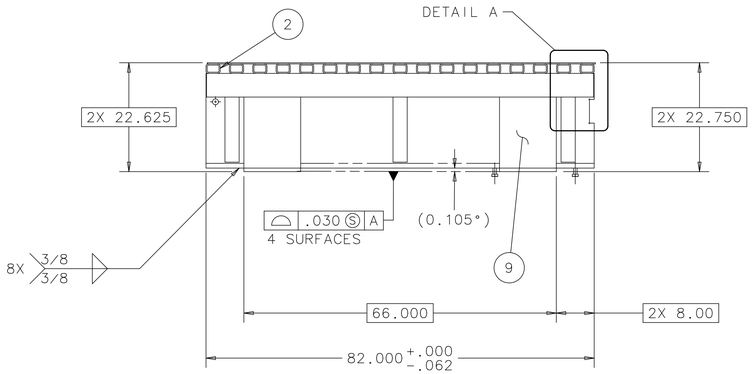

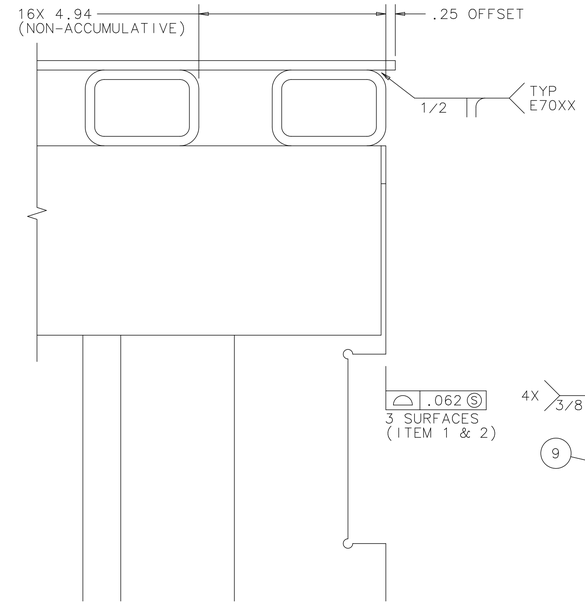

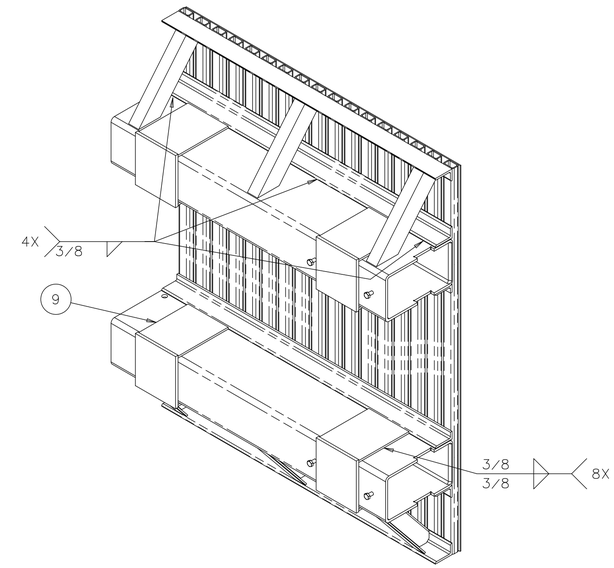

ISOMETRIC VIEW

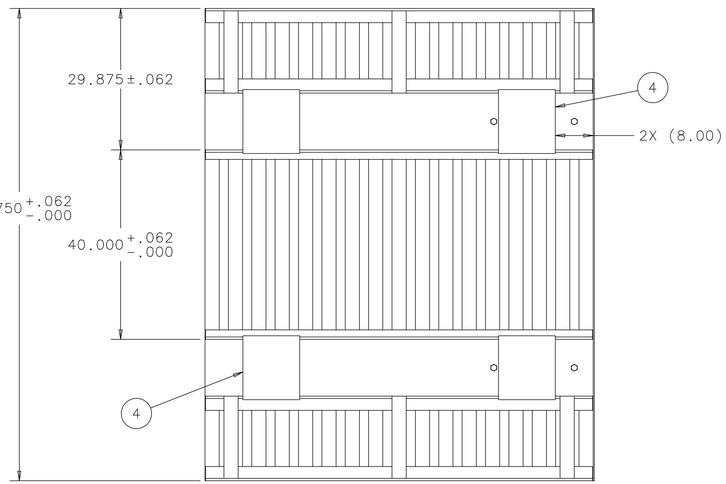

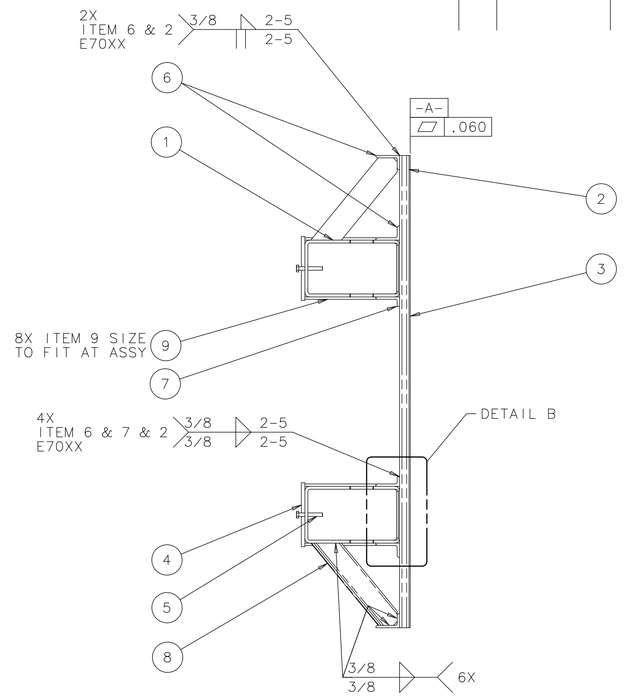

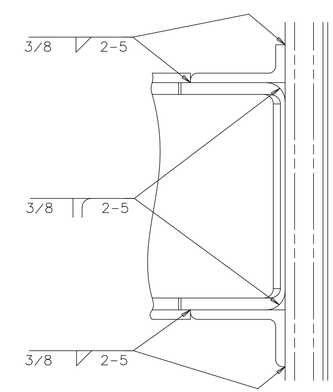

DETAIL A
SCALE: 1:4

EST WT.=4503 LBS

ITEM	PART NO.	DESCRIPTION OR SIZE	QTY.
9	COML	PLATE, 12.00 X 15.00 X .50 THK. ASTM A 36 STL.	8
8	MC-486945	ANGLE, MOD 5 X 3 X 5/8 X 24.37LG	6
7	MB-486944	ANGLE, MOD 5 X 3 X 1/2 X 81.75 LG	2
6	COML	ANGLE, 3 X 5 X 1/2 THK. 81.75 LG ASTM A 36 STL.	4
5	COML	SCREW, HX HD. 3/4-10 UNC X 5.00 LG. ZINC COATED STL, FULLY THREADED	4
4	COML	PLATE, 12.00 X 13.50 X .75 THK. ASTM A 36 STL.	4
3	COML	PLATE, 99.75 X 82.00 X .25 THK. ASTM A 36 STL.	1
2	COML	TUBE, 2.00 X 3.00 X .25 WALL X 99.75 LG. ASTM A 500 GR B STL.	17
1	MD-486966	TUBING STRUCTURAL 20X12X625X82.00	2

PARTS LIST

UNLESS OTHERWISE SPECIFIED			ORIGINATOR	E.VILLEGAS	01-FEB-2011
			DRAWN	V.MAJDANSKI	01-FEB-2011
±	±	±	CHECKED		
			APPROVED		

1. BREAK ALL SHARP EDGES MAX.
2. DO NOT SCALE DRAWING.
3. DIMENSIONS BASED UPON ASME Y14.5M-1994
4. MAX. ALL MACH. SURFACES √
5. DRAWING UNITS: U.S. INCH

USED ON

MATERIAL
SEE PARTS LIST ABOVE

FERMI NATIONAL ACCELERATOR LABORATORY
UNITED STATES DEPARTMENT OF ENERGY

NOVA-EQUIPMENT HANDLING
AR TABLE PIVOT MODULE
AR PALLET SEGMENT

SCALE	DRAWING NUMBER	SHEET	REV
1:16 & AS NOTED	3929.220-MD-486833	1 OF 1	

CREATED WITH : Ideas12NXSeries | GROUP: PPD/MECHANICAL DEPARTMENT

NOTES:

1. ALL WELDS TO BE E70XX OR EQUIVALENT.
2. ALL WELDING SHALL BE IN ACCORDANCE WITH ANSI/AWS D1.1, "STRUCTURAL WELDING CODE - STEEL"
3. ALL WELDS SHALL BE MADE IN A SEQUENCE THAT WILL BALANCE THE APPLIED WELDING HEAT WHILE THE WELDING PROGRESSES. THE PROCEDURE AND SEQUENCE SHALL BE DESIGNED TO MINIMIZE DISTORTION AND SHRINKAGE STRESSES.
4. ALL WELDS SHALL BE VISUALLY INSPECTED AND DYE PENETRANT INSPECTED TO DETECT SURFACE AND SUBSURFACE CRACKS AND DISCONTINUITES IN ACCORDANCE WITH ANSI/AWS D1.1, "STRUCTURAL WELDING CODE - STEEL".
5. ALL WELDS THAT FAIL AN INSPECTION SHALL BE REPAIRED IN ACCORDANCE WITH ANSI/AWS D1.1, "STRUCTURAL WELDING CODE - STEEL".
6. PAINT WITH PRIMER, DAMP PROOF RUST-OLEUM NO 769.