Fermilab

Particle Physics Division
Mechanical Department Engineering Note

Number: MD-ENG-279 Date: 1 November 2010

Project Internal Reference:

Project: NOvA

Title: FHEP Pivoter Hydraulics Commissioning Plan

Author(s): Dave Pushka

Reviewer(s):

Key Words: NOvA, FHEP, CDF, Hydraulics, Commissioning

Applicable Codes: n/a

Abstract Summary:

Three commercially produced hydraulic systems are included in the NOvA block pivoter to provide the powered motion required for this device to serve its intended purpose.

This engineering note describes the plan for commissioning the systems.

Discussion:

The three hydraulic systems are:

> Kneeling Cylinders designed to allow the pivoter to set the pallet down on the floor after the block is rotated to the vertical position
>
> Drive wheel hydraulic motors designed to propel the fully loaded pivoter along the floor rails from the block assembly area to the block final located.
>
> Pivot Cylinders designed to allow the table of the pivoter to rotate from a horizontal orientation to a vertical orientation.

Refer to the NOvA Conceptual design report in Nova Document database number 536 for a description of the block assembly. Pivoter requirements are in Nova Document database number 113. Geometry and orientation of the FHEP pivoter in CDF are described in NOvA document data base document number 3564 and PPD MSD engineering note 174 and in PPD MSD engineering note 181 posted in MSD Document data base document number 1043.

Kneeling cylinder specifications are in engineering note 202 posted in MSD Document data base document number 1044

Drive motor specifications were developed with the drive motor vendor based on pivoter weights listed in MSD engineering note 184 posted in MSD Document data base document number 1003 and included as an appendix in this document.

Pivot cylinders are in MSD engineering note 184 posted in MSD Document data base document number 1003.

Commissioning Plan – General

Applicable to all three hydraulic systems, the installation will be completed by MSD technicians; power and instrumentation wiring completed by electricians, hoses and hydraulic piping installed by MSD technicians with welding performed by FNAL welders, systems filled with filtered, new, hydraulic oil (Mobil DTE 24) and prepared for initial commissioning.

When systems are individually complete, hydraulic vendor will be brought in to assist in the initial operation of the system.

First tests of each system will be performed at minimum loads.

Once successful initial operation has been demonstrated, additional testing will occur at increasing load until the design capacity is demonstrated. Vendors will not be brought in for these additional tests unless the staff members performing the tests determine it is warranted.

Weeks and perhaps months may pass before additional operations can be performed due to the time required to add and install the next component.

Commissioning Plan – Specific to the Kneeling Cylinders:

Initial Operation load:	Upper weldments only (~ 50,000 pounds combined. (Completed in October 2010).
Second Operation load:	Upper weldment and table (adds ~ 24,000 pounds) (Completed in November 2010)
Third Operation load:	Upper Weldment, Table, and Pallet (adds ~ 2000 pounds) (Completed in November 2010)
Forth Operation load:	Upper Weldment, Table, Pallet and dead weight (add shield blocks until a load similar to the load of the FHEP plastic assembly is achieved. – This is about 50,000 pounds of shield blocks. (Completed in December 2010)
Fifth Operational load:	Table, Pallet and FHEP plastic.

Commissioning Plan – Specific to the Drive Motors:

Initial Operation Load:	NO load – Wheels blocked up to prevent pivoter axial motion. (Completed Oct 2010)
Second Operation load:	Lower and Upper weldments only (~ 90,000 pounds combined. (Completed Oct 2010).
Third Operation load:	Lower weldment and Upper weldment and table (adds ~ 24,000 pounds) (Completed in November 2010)
Forth Operation load:	Lower weldment, Upper Weldment, Table, and Pallet (adds ~ 2500 pounds) (Completed in November 2010)
Fifth Operation load:	Lower Weldment, Upper Weldment, Table, Pallet and dead weight (add shield blocks until a load similar to the load of the FHEP plastic assembly is achieved. – This is about 50,000 pounds of shield blocks. (Completed in December 2010)
Sixth Operational load:	Weldments, Table, Pallet and FHEP plastic.

Commissioning Plan – Specific to the Pivot Cylinders:

Initial Load:	Minimum load – Table only Conditon 1: Bare FHEP Table (Completed in November 2010)
Second Operation load:	Table and Pallet only Condition 2: FHEP Table + FHEP Pallet (Completed in November 2010)
Third Operation load:	Table, Pallet and Concrete Shield Block to simulate load of FHEP (base load on the load on the cylinder due to the moment, not just the weight of the shield blocks)

Condition 3: FHEP Table + FHEP Pallet + Dead weight to simulate FHEP Block

Dead Weight equals about 850 pounds when table is horizontal. (Completed in December 2010)
Dead Weight equals about 9000 pounds when table is vertical. (Completed in December 2010)

Forth Operation load: Table, Pallet and Concrete Shield Block to simulate load of Ash River Table

Condition 4: FHEP Table + FHEP Pallet + Dead weight to simulate ASH River Bare Table

Dead Weight equals about 24,000 pound when table is horizontal. Counterweights will be needed on the lower frame for this loading to keep from tipping the entire assembly.
Dead Weight equals about 3000 pounds when table is vertical. (Vertical Test Completed in December 2010)

Fifth Operation load: Table, Pallet and Concrete Shield Block to simulate load of Ash River Table

Condition 5: FHEP Table + FHEP Pallet + Dead weight to simulate ASH River Table + Pallet

Dead Weight equals about 38,000 pound when table is horizontal. Counterweights will be needed on the lower frame for this loading to keep from tipping the entire assembly.
Vertical simulation dead load is less then that used in test 2. Therefore, there is no reason to repeat for this condition.

Sixth Operation load: Table, Pallet and Concrete Shield Block to simulate load of Ash River Table

Condition 6: FHEP Table + FHEP Pallet + Dead weight to simulate ASH River Table + Pallet + FD Block

Dead Weight equals about 14,000 pound when table is horizontal. This is less then that used in test 2. Therefore, there is no reason to repeat for this condition. Vertical simulation dead load is about 64,184 pounds. (50,500 pounds applied in December 2010).

Calculations:

FHEP Hydraulic Pivot Cylinders Commissioning Plan Loads:						
Load (See drawing 466566 Rev C for loads and locations of center of gravities):						
Weight of Table	24,296	pounds				
Weight of FHEP Plastic	50,392	pounds				
Weight of Pallet	2,850	pounds				
Sum of Table and FHEP Plastic	77,538	pounds				
Note: FHEP Plastic and Table are 11/12ths the height of the full detector. Therefore, c.g's are not the same as in engineering note 184.						
Dimensions shown in itallics indicate differences in the FHEP verse Ash River Pivoter.						
Detector Block Weights and Dimensions and Loads to Table:						
Weight of a PVC Block (empty) Nominal	50,392	pounds	25.2	tons (short)		
Weight of a PVC Block (empty) minimal	48,000	pounds	24.0	tons (short)		
Weight of a PVC Block (empty) maximum	52,000	pounds	26.0	tons (short)		
Weight of a block Used for Calculations below	50,392	pounds	25.2	tons (short)		
Nominal Thickness of a block	2053.6	millimete	80.85	inches		
Nominal Height of a Block	14.53	m	572.00	in	47.66667	ft
Nominal Width of a Block	2.77	m	109	in	9.083333	ft
Volume of Block	2,917	ft3				
Apparent Density of Empty Block	17.3	#/ft3				
Block loading on table when horizontal	116.39	#/square foot				

Geometry of Block relative to Table Pivot:			
Weight of a block Used for Calculations below	50,392	pounds	Assume to be the maximum weight of the PVC block calculated from the extrusion weights based on mechanical tolerances
Distance from table top to pivot (vertical direction when table horizontal)	8	inches	positive means that the pivot is below the top surface of the table when the table is horizontal
Vertical Distance from pivot to block c.g when table is horizontal	***48.770***	inches	equals half the thickness of a block plus the goal distance from the table top to the pivot shown right above
Horizontal Distance from Pivot to block c.g. when table is horizontal (positive number is toward the forks)	***3.750***	inches	zero undicates that the pivot is right under the block c.g., positive means that the pivot is towards the forks
Moments Generated by the Block Weight on the Table When Table is Vertical:	2,457,618	in-lbs	Vertical Distance (B26) to block c.g. times the Block weight (B24)
Moments Generated by the Block Weight on the Table When Table is Horizontal:	188,970	in-lbs	Horizontal Distance (B27) to block c.g. times the Block weight (B24)

Geometry of Pallet relative to Table Pivot:			
Weight of the Pallet Nominal	2,850	pounds	Pallet weight comes from the Ideas Solid Model of the pallet
Distance from Pallet surfact to Pallet c.g.	3	inches	Pallet c.g. location relative to surface taken from the Ideas 3D model of the pallet
Vertical Distance from pivot to block c.g when table is horizontal	48.770	inches	assumed same as the distance for the PVC block calculated above
Horizontal Distance from Pivot to pallet c.g. when table is horizontal (positive number is toward the forks)	297.000	inches	zero undicates that the pivot is right under the block c.g., positive means that the pivot is towards the forks
Moments Generated by the Pallet Weight on the Table When Table is Vertical:	138,995	in-lbs	Vertical Distance (B34) to Pallet c.g. times the Pallet weight (B32)
Moments Generated by the Pallet Weight on the Table When Table is Horizontal:	846,450	in-lbs	Horizontal Distance (B35) to Pallet c.g. times the Pallet weight (B32)

Geometry of Table relative to Table Pivot:			
Weight of Table, Nominal	24,296	pounds	calculated by taking the FHEP table weight from Ideas solid and multipling by 6 to get full table width.
Vertical Distance from pivot to table c.g when table is horizontal	***-15.020***	inches	negative means the c.g. is below the pivot elevation when table is horizontal
Horizontal Distance from Pivot to table c.g. when table is horizontal (positive number is toward the forks)	***70.680***	inches	zero undicates that the pivot is right under the block c.g., positive means that the pivot is towards the forks
Moments Generated by the Table Weight on the Table When Table is Vertical:	(364,926)	in-lbs	Vertical Distance (B41) to Table c.g. times the Table weight (B40)
Moments Generated by the Table Weight on the Table When Table is Horizontal:	1,717,241	in-lbs	Horizontal Distance (B42) to Table c.g. times the Table weight (B40)
Combined PVC Block and Pallet Moments:			
Weight of PVC Block and Pallet	53,242	pounds	Sum of cells B24 + B32 to sum the weight
Moments Generated by the Block + Pallet Weight on the Table When Table is Vertical:	2,596,612	in-lbs	Sum of cells B28 + B36 to sum the Moment
Moments Generated by the Block + Pallet Weight on the Table When Table is Horizontal:	1,035,420	in-lbs	Sum of cells B29 + B37 to sum the Moment
Combined Table, PVC Block and Pallet Moments:			
Weight of Table, PVC Block and Pallet	77,538	pounds	Sum of cells B24 + B32 + B40 to sum the weight
Moments Generated by the Block + Pallet + Table Weight on the Table When Table is Vertical:	2,231,686	in-lbs	Sum of cells B28 + B36 + B43 to sum the Moment
Moments Generated by the Block + Pallet + Table Weight on the Table When Table is Horizontal:	2,752,661	in-lbs	Sum of cells B29 + B37 + B44 to sum the Moment
Location of Combined C.G. values for Table, PVC Block and Pallet:			
Vertical Distance for C.G. ofTable, PVC Block and Pallet	1.300	inches	Calculated by dividing the sum of the moments (B53) by the Combined weight (B52)
Horizontal Distance for c.g. of Table, PVC Block and Pallet	1.603	inches	Calculated by dividing the sum of the moments (B54) by the Combined weight (B52)

Cylinder, Pivot, and Anchor Locations:			
Horizontal distance (when table is horz) from pivot to cylinder connection	208.000	inches	labled as distance "x" on sketch 1
Vertical distance (when table is horz) from pivot to cylinder connection	60.000	inches	labled as distance "y" on sketch 1
Horizontal distance from pivot to cylinder stationary connection	135.000	inches	labled as distance "u" on sketch 1
Vertical distance from pivot to cylinder stationary connection	208.000	inches	labled as distance "v" on sketch 1

SKETCH 1	4-17-09	DAVE PUSHEK

GEOMETRY WHEN TABLE IS HORIZONTAL:

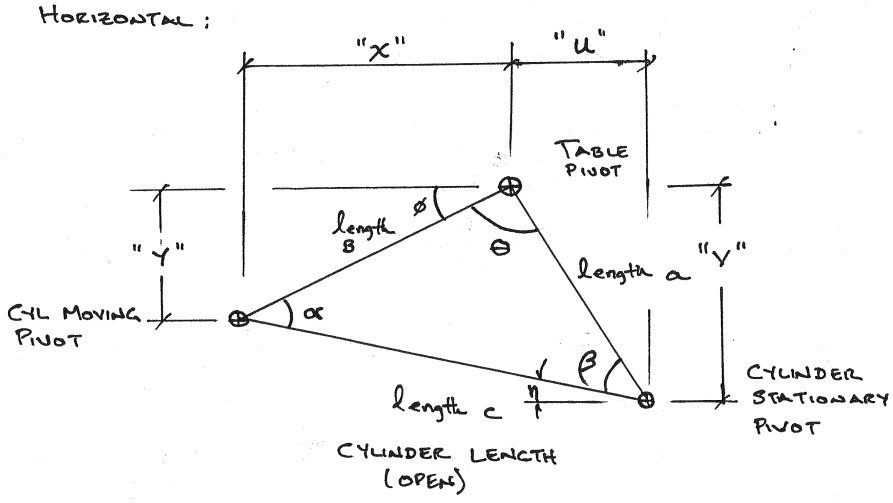

angle η IS THE ANGLE OF THE CYLINDER ABOVE HORIZONTAL.

GEOMETRY WHEN TABLE IS VERTICAL:

length a IS CONSTANT

length B IS CONSTANT

$\alpha_{CLOSED} = 90 + \phi$

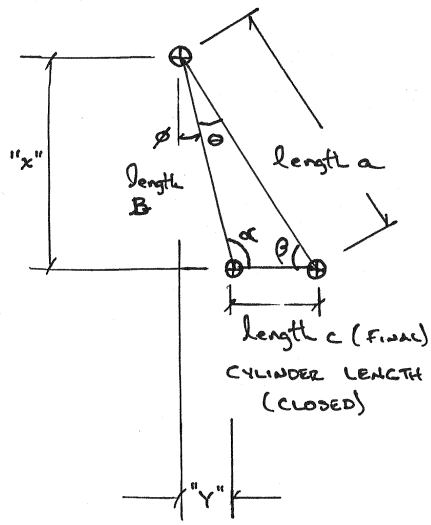

SKETCH 2 | 4-21-09 | DAVE PUSHER

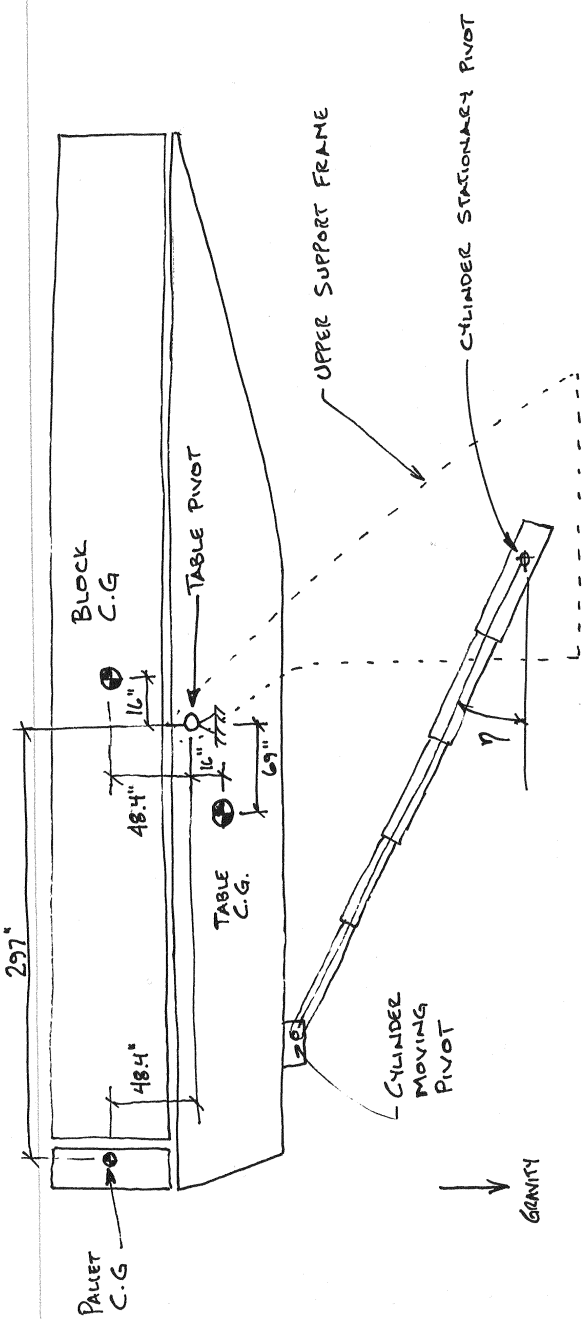

SKETCH 3	4-21-09	DAVE PUSHKAR

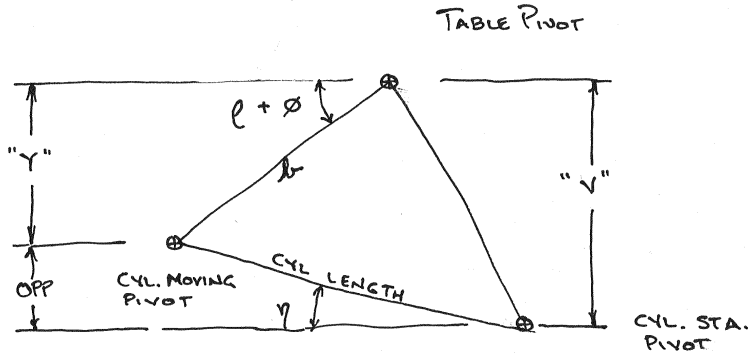

CYLINDER ANGLE, η =

$$\sin \eta = \frac{OPP}{HYP} = \frac{OPP}{\text{CYLINDER LENGTH}}$$

OPP = LENGTH "V" − LENGTH "Y"

$\angle \phi$ = CONSTANT

$\angle \rho$ = TABLE ROTATION

LENGTH "Y" = $b \sin(\phi + \rho)$

OPP = "V" − $b \sin(\phi + \rho)$

$$\sin \eta = \frac{V - b \sin(\phi + \rho)}{\text{CYL. LENGTH}}$$

$$\therefore \eta = \arcsin\left(\frac{V - b \sin(\phi + \rho)}{\text{CYL. LENGTH}}\right)$$

SKETCH #4	4-21-09	DAVE PUSHKA

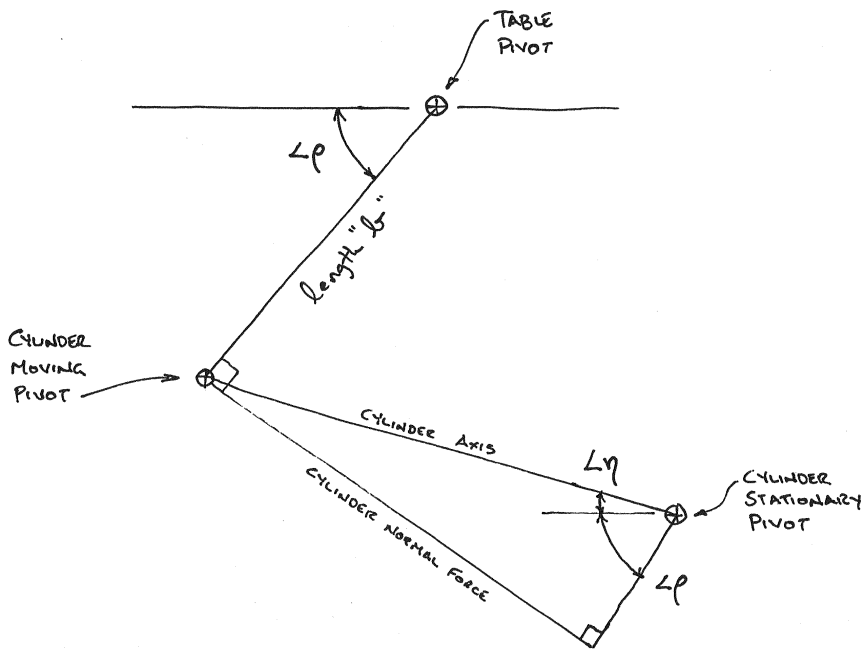

$$\Sigma M_{\substack{\text{TABLE}\\\text{PIVOT}}} = 0 = M_{\text{TABLE}} + M_{\text{PALLET}} + M_{\text{BLOCK}} - \text{"}b\text{"} \times (\text{CYL. NORMAL FORCE})$$

$$\therefore \text{ CYLINDER NORMAL FORCE} = \frac{M_T + M_P + M_B}{\text{"}b\text{"}}$$

$$\text{CYLINDER AXIAL FORCE} = \frac{\text{CYLINDER NORMAL FORCE}}{\sin(\eta + \rho)}$$

SKETCH 5	5-6-09	DAVE PUSHKA

CALCULATIONS FOR MOMENT GENERATED BY TABLE ABOUT TABLE PIVOT.

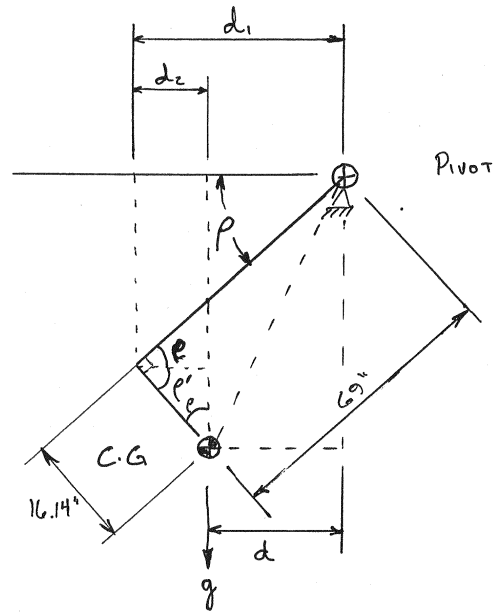

$$\text{MOMENT} = mg \times d$$

$$d = d_1 - d_2$$

$$d_1 = 69 \cos\rho$$

$$d_2 = 16.14 \sin\rho$$

$$\cancel{d = (69 - 16.14) \cos\rho}$$

$$d = 69 \cos\rho - 16.1 \sin\rho$$

$$\therefore M = (mg)(69 \cos\rho - 16.1 \sin\rho)$$

SKETCH 6	5-8-09	DAVE POSHKA

PIN LOCATIONS FOR UPPER_FRAME_4

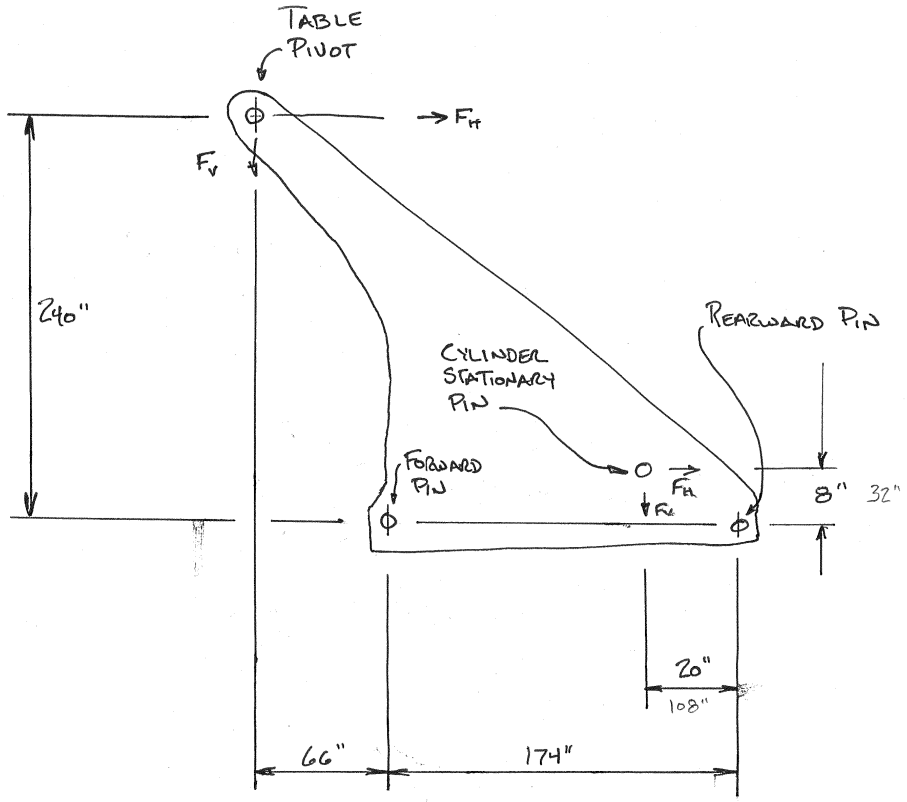

Cylinder Distances when table Horizontal:			
horizontal length	343.000	inches	Sum of Horizontal distances (B62) + (B64)
vertical length	148.000	inches	Change in Vertical disances (B65) - (B63)
Overall length	373.568	inches	square of the sum of the squares of (B69) and (B70)
Angle of Cylinder above horizontal	0.4074	radians	calculated using the inverse tangent of (B70) over (B69)
Angle of Cylinder above horizontal	23.34	degrees	(B72) converted to degrees
Cylinder Loads with Table Horizontal:			
Moment to counter	2,752,661	in-lbs	Moment is due to Block + Pallet + Table and is equal to the value calculated in (B55)
Lever arm pivot to cylinder connection	208	in	Value from (B62)
Vertical Component of Cylinder Force	13,234	lbs	(B76) divided by (B77)
Horizontal Component of Cylinder Force	30,671	lbs	Square root of the sum of the squared = sqrt((B70)^2 - (B68)^2)
Axial component of cylinder force	33,404	lbs	Calculated by (B78)/sin(B72)
Cylinder Loads with Table Vertical			
Moment to counter	2,231,686	in-lbs	Moment is due to Block + Pallet + Table and is equal to the value in cell (B54)
Lever arm pivot to cylinder connection	208	in	Value from (B65)
Horizontal Component of Cylinder Force	10,729	lbs	Calculated by (B83)/ (B84); Cylinder axis is horzontal at this condition
Cylinder Loads with Table Vertical			
Moment to counter	(364,926)	in-lbs	Moment is due to Table and equals the value in cell (B44)
Lever arm pivot to cylinder connection	208	in	Value from (B65)
Horizontal Component of Cylinder Force	(1,754)	lbs	Calculated by (B88)/ (B89); Cylinder axis is horzontal at this condition

Geometry Calculations:			
Length "a"	247.97	inches	this is the distance from the pivot to the stationary pin for the cylinder; calculated using the Pythagorean theorem
Length "b"	216.48	inches	this is the distance from the pivot to the table mounted (moving) pin for the cylinder; calculated using the Pythagorean theorem
Length "c" (initial)	373.57	inches	this is the length of the cylinder when extended to put the table surface horizontal cylinder open length; calculated using the law of cosines
length "c" (final)	75.00	inches	this is the length of the cylinder when the table is vertical, cylinder closed length; calculated using the Pythagorean theorem
Angle 'phi' φ (constant)	51	degrees	angle below horizontal from table pivot to the table mounted (moving) pin for the cylinder; calculated using the Puthagorean theorem
Angel 'alpha closed', α	141	degrees	angle alpha when the table is vertical; calculated using complementary angle with angle phi, φ
Angle 'Theta closed' θ	17	degrees	angle theta when the table is vertical; calculated using the law of cosines
Angle 'Theta open'	107	degrees	angle from table cylinder pivot, vertex at pivot, to cylinder stationary connection when the table is horizontal; calculated by adding 90 degrees (table rotation) to Theta closed, θ
Angle 'alpha open' α	39	degrees	angle alpha when the table is horizontal; calculated using the law of cosines
Angle 'Beta open' β	34	degrees	angle from cylinder moving pivot, vertiex at cyl stational pivot, to table pivot wne the table is horizontal; calculated using the sum of the triangle angles = 180

Summary of FHEP Pivoter Moments (Table Horizontal):		
Moments Generated by the Table Weight on the Table When Table is Horizontal:	1,717,241	in-lbs
Moments Generated by the Pallet Weight on the Table When Table is Horizontal:	846,450	in-lbs
Moments Generated by the Block Weight on the Table When Table is Horizontal:	188,970	in-lbs
Moments Generated by the Table and Pallet when Table is Horizontal	2,563,691	in-lbs
Moments Generated by the Block + Pallet + Table Weight on the Table When Table is Horizontal:	2,752,661	in-lbs
Summary of FHEP Pivoter Moments (Table Vertical):		
Moments Generated by the Table Weight on the Table When Table is Vertical:	(364,926)	in-lbs
Moments Generated by the Pallet Weight on the Table When Table is Vertical:	138,995	in-lbs
Moments Generated by the Block Weight on the Table When Table is Vertical:	2,457,618	in-lbs
Moments Generated by the Table and Pallet when Table is Vertical	(225,931)	in-lbs
Moments Generated by the Block + Pallet + Table Weight on the Table When Table is Vertical:	2,231,686	in-lbs

Summary of ASH RIVER Pivoter Moments (Table Horizontal) from Engineering note 184:		
Moments Generated by the Table Weight on the Table When Table is Horizontal:	9,455,594	in-lbs
Moments Generated by the Pallet Weight on the Table When Table is Horizontal:	3,564,000	in-lbs
Moments Generated by the Block Weight on the Table When Table is Horizontal:	(6,317,245)	in-lbs
Moments Generated by the Table and Pallet when Table is Horizontal	13,019,594	in-lbs
Moments Generated by the Block + Pallet + Table Weight on the Table When Table is Horizontal:	6,702,349	in-lbs
Summary of ASH RIVER Pivoter Moments (Table Vertical) from Engineering note 184:		
Moments Generated by the Table Weight on the Table When Table is Vertical:	(2,211,787)	in-lbs
Moments Generated by the Pallet Weight on the Table When Table is Vertical:	581,102	in-lbs
Moments Generated by the Block Weight on the Table When Table is Vertical:	19,119,615	in-lbs
Moments Generated by the Table and Pallet when Table is Vertical	(1,630,685)	in-lbs
Moments Generated by the Block + Pallet + Table Weight on the Table When Table is Vertical:	17,488,931	in-lbs

Check the location of the table and pallet c.g. on dwg:				
Weight of Table + Pallet	27,146	pounds		
Moment when Horizontal from above:	2,563,691	in-lbs		
Distance (horiontal) pivot to c.g.	94.44	inches		
Moment whenVertical from above:	(225,931)			
Distance (vertical) pivot to c.g.	-8.323	inches		
Weights from Drawing 486364				
Table	24,296	pounds		
Pallet	2,850	pounds		
Table + Pallet	27,146	pounds		
FHEP Block	50,392	pounds		
Table, Pallet + FHEP Block	77,538	pounds		
Complete Assembly	78,683	pounds		
Check drawing values with respect to these calcs.	X	Y	Mx	My
Okay, matches above	70.68	-15.02	1,717,241	(364,926)
Okay, matches above	297	48.77	846,450	138,995
Small error in 4th sig fig	94.5	-8.3	2,565,297	(225,312)
Okay, matches above	3.75	48.77	188,970	2,457,618
Error in 3rd sig fig	35.83	28.08	2,778,187	2,177,267
	35.83	28.08	2,819,212	2,209,419

Loading Conditions to Test FHEP Pivoter at CDF:		
Geometry:		
Cylinder Lever Arm when table horizontal:	208.000	inches
Cylinder Lever Arm when table vertical:	208.000	inches
Angle between Cylinder and Table when horizontal:	23.34	degrees
Angle between Cylinder and Table when vertical:	90	degrees
Cylinder Area (based on 2 times area of the rod end stage):	106.9	sq inches

Conditon 1: Bare FHEP Table		
Moment with table Horizontal:	1,717,241	in-lbs
Moment with table Vertical:	(364,926)	in-lbs
Force (Applied Perpenducular to table) to keep Table Horizontal:	8,255.97	pounds
Force (Applied Perpenducular to table) to keep Table Vertical:	(1,754.45)	pounds
Cylinder Force to keep Table Horizontal:	20,838.95	pounds
Cylinder Force to keep Table Vertical:	(1,754.45)	pounds
Cylinder Pressure to keep Table Horizontal:	194.92	psi
Cylinder Pressure to keep Table Vertical:	(16.41)	psi
Condition 2: FHEP Table + FHEP Pallet		
Moment with table Horizontal:	2,563,691	in-lbs
Moment with table Vertical:	(225,931)	in-lbs
Force (Applied Perpenducular to table) to keep Table Horizontal:	12,325.44	pounds
Force (Applied Perpenducular to table) to keep Table Vertical:	(1,086.21)	pounds
Cylinder Force to keep Table Horizontal:	31,110.73	pounds
Cylinder Force to keep Table Vertical:	(1,086.21)	pounds
Cylinder Pressure to keep Table Horizontal:	290.99	psi
Cylinder Pressure to keep Table Vertical:	(10.16)	psi

Condition 3: FHEP Table + FHEP Pallet + Dead weight to simulate FHEP Block		
Moment with table Horizontal:	2,800,000	in-lbs
Moment with table Vertical:	2,300,000	in-lbs
Force (Applied Perpenducular to table) to keep Table Horizontal:	13,461.54	pounds
Force (Applied Perpenducular to table) to keep Table Vertical:	11,057.69	pounds
Cylinder Force to keep Table Horizontal:	33,978.37	pounds
Cylinder Force to keep Table Vertical:	11,057.69	pounds
Cylinder Pressure to keep Table Horizontal:	317.82	psi
Cylinder Pressure to keep Table Vertical:	103.43	psi
Condition 4: FHEP Table + FHEP Pallet + Dead weight to simulate ASH River Bare Table		
Moment with table Horizontal:	9,455,594	in-lbs
Moment with table Vertical:	581,102	in-lbs
Force (Applied Perpenducular to table) to keep Table Horizontal:	45,459.59	pounds
Force (Applied Perpenducular to table) to keep Table Vertical:	2,793.76	pounds
Cylinder Force to keep Table Horizontal:	114,744.90	pounds
Cylinder Force to keep Table Vertical:	2,793.76	pounds
Cylinder Pressure to keep Table Horizontal:	1,073.26	psi
Cylinder Pressure to keep Table Vertical:	26.13	psi

Condition 5: FHEP Table + FHEP Pallet + Dead weight to simulate ASH River Table + Pallet		
Moment with table Horizontal:	13,019,594	in-lbs
Moment with table Vertical:	(1,630,685)	in-lbs
Force (Applied Perpenducular to table) to keep Table Horizontal:	62,594.20	pounds
Force (Applied Perpenducular to table) to keep Table Vertical:	(7,839.83)	pounds
Cylinder Force to keep Table Horizontal:	157,994.51	pounds
Cylinder Force to keep Table Vertical:	(7,839.83)	pounds
Cylinder Pressure to keep Table Horizontal:	1,477.80	psi
Cylinder Pressure to keep Table Vertical:	(73.33)	psi
Condition 6: FHEP Table + FHEP Pallet + Dead weight to simulate ASH River Table + Pallet + FD Block		
Moment with table Horizontal:	6,702,349	in-lbs
Moment with table Vertical:	17,488,931	in-lbs
Force (Applied Perpenducular to table) to keep Table Horizontal:	32,222.83	pounds
Force (Applied Perpenducular to table) to keep Table Vertical:	84,081.40	pounds
Cylinder Force to keep Table Horizontal:	81,333.90	pounds
Cylinder Force to keep Table Vertical:	84,081.40	pounds
Cylinder Pressure to keep Table Horizontal:	760.75	psi
Cylinder Pressure to keep Table Vertical:	786.45	psi
Condition 7: FHEP Table + FHEP Pallet + FHEP Detector		
Moment with table Horizontal:	2,231,686	in-lbs
Moment with table Vertical:	6,702,349	in-lbs
Force (Applied Perpenducular to table) to keep Table Horizontal:	10,729.26	pounds
Force (Applied Perpenducular to table) to keep Table Vertical:	32,222.83	pounds
Cylinder Force to keep Table Horizontal:	27,081.81	pounds
Cylinder Force to keep Table Vertical:	32,222.83	pounds
Cylinder Pressure to keep Table Horizontal:	253.31	psi
Cylinder Pressure to keep Table Vertical:	301.39	psi

Dead Weight Calculations for horizontal table:		
Locate dead weight centered, this # of inches from face of pallet when table horizontal:	18	inches
Lever Arm Distance from dead wt. to pivot when table is horizontal:	276	inches
Condition 3: FHEP Table + FHEP Pallet + Dead weight to simulate FHEP Block		
Additional Required Moment in excess of case 2:	236,309	in-lbs
Required dead weight for above lever arm	856	pounds
Condition 4: FHEP Table + FHEP Pallet + Dead weight to simulate ASH River Bare Table		
Additional Required Moment in excess of case 2:	6,891,903	in-lbs
Required dead weight for above lever arm	24,971	pounds
Condition 5: FHEP Table + FHEP Pallet + Dead weight to simulate ASH River Table + Pallet		
Additional Required Moment in excess of case 2:	10,455,903	in-lbs
Required dead weight for above lever arm	37,884	pounds
Condition 6: FHEP Table + FHEP Pallet + Dead weight to simulate ASH River Table + Pallet + FD Block		
Additional Required Moment in excess of case 2:	4,138,658	in-lbs
Required dead weight for above lever arm	14,995	pounds

Dead Weight Calculations for Vertical table:		
Locate dead weight centered, this # of inches from face of pallet when table Vertical:	36	inches
Lever Arm Distance from dead wt. to pivot when table is horizontal:	44	inches
Condition 3: FHEP Table + FHEP Pallet + Dead weight to simulate FHEP Block		
Additional Required Moment in excess of case 2:	2,525,931	in-lbs
Required dead weight for above lever arm	9,152	pounds
Condition 4: FHEP Table + FHEP Pallet + Dead weight to simulate ASH River Bare Table		
Additional Required Moment in excess of case 2:	807,034	in-lbs
Required dead weight for above lever arm	2,924	pounds
Condition 5: FHEP Table + FHEP Pallet + Dead weight to simulate ASH River Table + Pallet		
Additional Required Moment in excess of case 2:	(1,404,753)	in-lbs
Required dead weight for above lever arm	(5,090)	pounds
Condition 6: FHEP Table + FHEP Pallet + Dead weight to simulate ASH River Table + Pallet + FD Block		
Additional Required Moment in excess of case 2:	17,714,862	in-lbs
Required dead weight for above lever arm	64,184	pounds

Appendix A: Drive motor vendor proposal.

CMA/Flodyne/Hydradyne

1000 Muirfield Drive
Hanover Park, IL 60133
Phone: (630) 563-3600
Fax: (630) 563-3850

Thursday, 13 August 2009

Fermilab
Kirk & Wilson Roads
P.O. Box 500
Batavia, IL 60510

Attention: Mr. David Pushka, Engineering
Subject: Hydraulic Drive for Nova Block Raiser

Dear Dave,
CMA/Flodyne/Hydradyne is please to quote a complete hydraulic solution for you Nova Block Raiser drive control. Specifications for determining the solution are as follows:

- Total maximum mass, 600,000 pounds
- Maximum speed 1 MPH
- Acceleration rate to maximum speed 30 seconds
- Road resistance polyurethane on concrete
- 1 percent grade
- Two drive wheels, 36" diameter on common axle

The system provided will consist of the following components:

- Hydrostatic closed loop drive with the following assembled skid:
  - Reservoir with filler-breather, level and temperature gauge
  - Closed loop hydrostatic pump nominal pressure rating of 5800 PSI with pressure override, variable volume
  - 75 HP 1800 RPM 460/3/60 TEFC electric motor
  - Charge pump filter with electrical bypass indicator
  - Hot oil shuttle valve
  - Return filter with electrical bypass
  - Air/oil heat exchanger to maintain adequate cool sump oil temperature
- Electrical control panel assembled and mounted on skid consisting of the following:
  - Door mounted disconnect switch

MAIN DISTRIBUTION CENTERS

3265 Gateway Road, Suite 300
Brookfield, WI 53045
Phone: (262) 781-1815
Fax: (262) 781-2521

1000 Muirfield Drive
Hanover Park, IL 60133
Phone: (630) 563-3600
Fax: (630) 563-3850

BRANCH OFFICES

Rockford, IL Tel. (815) 229-7602 Fax (815) 229-7905
Peoria, IL Tel. (309) 697-7005 Fax (309) 697-8576
Davenport, IA Tel. (563) 355-2339 Fax (563) 355-2571
Green Bay, WI Tel (920) 336-7620 Fax (920) 336-7610

CMA/Flodyne/Hydradyne

1000 Muirfield Drive
Hanover Park, IL 60133
Phone: (630) 563-3600
Fax: (630) 563-3850

- Motor starter and overloads for 75 HP motor
- Motor starter and overloads for air/oil heat exchanger
- Pendant with disconnect for motor start/stop, emergency stop, joystick for forward/reverse motion of Nova Block Raiser
- All necessary transformers, power supplies, amplifiers and circuit breakers for complete machine control

- Two Bosch-Rexroth GFT0040 gear boxes with fixed displacement piston motors, wheel mount configuration to meet above specifications. Hydraulic motors will be mounted to gear boxes and shipped loose.
- Startup assistance provided by CMA/Flodyne/Hydradyne after unit is installed by Fermilab personnel

Net cost for above $59,260.00
Terms: Net 30 after shipment
Delivery 12 – 16 weeks after approval of drawing

Drawings and engineering review will take approximately 2-5 days after receipt of order. This quotation does not include installation at Fermilab or the first fill of oil. Hydrostatic drive will be tested at CMA/Flodyne/Hydradyne for correct operation of control, pressure and flow. As noted above CMA/Flodyne/Hydradyne will provide startup assistance after unit has been installed and piped at your facility (Batavia, IL). Startup assistance and/or service work may be contracted for at facilities outside Illinois. Commercial terms for startup may be negotiated and service is provided per our attached service rates.

Thank you for thinking of CMA/Flodyne/Hydradyne for your hydraulic and control needs. If you need further information or assistance please don't hesitate to call.

Best regards,

Norman Kronowitz
cc: Mike Colaianne, CMA/Flodyne/Hydradyne MRO Salesman

MAIN DISTRIBUTION CENTERS

3265 Gateway Road, Suite 300
Brookfield, WI 53045
Phone: (262) 781-1815
Fax: (262) 781-2521

1000 Muirfield Drive
Hanover Park, IL 60133
Phone: (630) 563-3600
Fax: (630) 563-3850

BRANCH OFFICES

Rockford, IL Tel. (815) 229-7602
Fax (815) 229-7905

Peoria, IL Tel. (309) 697-7005
Fax (309) 697-8576

Davenport, IA Tel. (563) 355-2339
Fax (563) 355-2571

Green Bay, WI Tel (920) 336-7620
Fax (920) 336-7610

Appendix B Hazard Analysis

Hazard Analysis Form

This form can be used by Fermilab Employees, Fermilab Supervisors, Fermilab Task Managers, Construction Coordinators, Service Coordinators, and Fermilab Subcontractors. This is a dynamic document which may require modification as the project moves from start to finish and should be readily available at the site where the work is being performed.

Note: Not all sections of the first page are applicable to every job or task, complete what is necessary for your specific job or task.

Job Title NOvA FHEP Pivoter Drive and Kneeling cylinder Hydraulics Initial Start-Up
Job Location CDF
Contract/Work Order # n/a

TO BE COMPLETED FOR WORK INVOLVING SUBCONTRACTORS

Subcontractor (if applicable)	**Fermilab**
Company _____	Project Manager _____
Project Manager _____	Phone _____
Phone _____ Page _____	TM/CC/SC _____
ESH Rep. _____	Phone _____ Page _
Phone _____ Page _____	ES&H Rep. _____
ESH Rep. _____	Phone _____ Page _
Phone _____ Page _____	

AT LEAST TWO SIGNATURES ARE REQUIRED

X Prepared Dave Pushka Date 9-22-2010

Print Name Dave Pushka

☐ Accepted_____ Date _____
Print Name _____

☐ Accepted as noted_____ Date _____

Print Name _____

Description of Work: **Initial Operation and Testing of commercially produced hydraulic jacks and drive motors. Vendor experts will be present.**

Personal Protective Equipment: (Check protective equipment required for the job.)

X Safety glasses
□ Side shields
□ Chemical splash goggles
□ Hearing Protection
□ Hard Hats
□ 3.0 Brazing goggles
□ Impact goggles
□ Face shield
□ Rubber apron

□ Leather gloves
□ Hot/Cold thermal protective gloves
□ Chemical resistant gloves (specify type): _____
□ Respirators

□ Other required PPE (specify): _____
□ Fall protection equipment
(specify): _____

Environmental Aspects (check one):

X Yes, I have thought about the environmental aspects of this job and will document such aspects and mitigation steps within this document.

□ Yes, I have thought about the environmental aspects of this job and no such credible aspects exist and therefore do not need to be written in this document.

Equipment required for the job: (List the tools needed to perform the job.)

Spill clean-up materials and cover-alls in case a spill occurs and needs immediate clean-up

Hydraulic Oil (Mobil DTE-25) MSDS is number 7494 in the ES&H data base

Work Plan History Information: (List any lessons learned incidents from this job, tips from previous jobs)

Improvement/Feedback: At the conclusion of the job, the Task Manager, Supervisor and/ or Project Leader shall work with those involved to consider lessons learned and receive feedback in order to improve future work plans.

Check One:

□ **Yes** we have considered lessons learned and accepted feedback on this job and will communicate such information so that future work plans may be improved.

□ **Yes** we have considered lessons learned feedback and determined that future work plans do not need to be improved.

Utilizing the format below, identify hazards and environmental aspects, and their corresponding safety precautions/procedures to mitigate hazards. Use as many sheets as necessary.

HAZARD ANALYSIS

Step	Description	Hazards/ Environmental Aspects	Precautions / Safety Procedures
1	Enter CDF pit	Possible overhead lifting	If lifting occurs, wear hardhats (as is posted in area) and stay out from under load.
2	Plug in power unit to AC	Shock or flash	AC power provided by standard NEMA connectors installed by electricians.
3	Change phase rotation (if needed)	Shock or flash	Unplug from AC power before changing leads (plug connected equipment with plug in direct control of person) - LOTO program does not apply. See FESHM 5120 Section3. Application first bullet item.
4	Operate Drive Joy Stick	Wheels turn Pinch	Block wheels up off floor to prevent pivoter from moving. Stay back from rotating wheels
5	Operate Kneeling Jacks	Upper frame moves up and down with possible pinch points.	Stay back from moving items and keep fingers out of possible pinch points.
6	Operation of either kneeling jacks or drive motors	Non-directly involved people distracting crew performing work	Cease work until distractions abate. Ask sightseers to retreat to the upper level.
7	Un-intended Oil Spill or leak to the floor.	Slip Hazard	Wipe up spilled oil to remove slip hazard. If conditions warrant, were tyvek suit to protect clothing. Oil is non-hazardous, non-toxic
8			

GUIDELINES FOR COMPLETING THE HAZARD ANALYSIS

Phase of Work	Safety Hazard	Precautions/Safety Procedures
Examining a specific job by breaking it down into a series of steps or tasks, will enable you to discover potential hazards employees may encounter. Each job or operation will consist of a set of steps or tasks. For example, the job might be to move a box from a conveyor in the receiving area to a shelf in the storage area. To determine where a step begins or ends, look for a change of activity, change in direction or movement. Picking up the box from the conveyor and placing it on a hand truck is one step. The next step might be to push the loaded hand truck to the storage area (a change in activity. Moving the boxes from the truck and placing them on the shelf is another step. The final step might be returning the hand truck to the receiving area. Be sure to list *all* steps needed to perform the job. Some steps may not be performed each time; an example could be checking the casters on the hand truck. However, if that step is generally part of the job it should be listed.	A hazard is a potential danger to a person or equipment. The purpose of the Job Safety Analysis is to identify ALL hazards- both those produced by the environment and those connected with the job procedure. To identify hazards, ask yourself these questions about each step: Is there a danger of the employee striking against, being struck by, or otherwise making injurious contact with an object? Can the employee be caught in, by, or between objects? Is there potential for slipping, tripping, or falling? Could the employee suffer strains from pushing, pulling, lifting, bending, or twisting? Is the environment hazardous to safety and/or health (toxic gas, vapor, mist, fumes, dust, heat, or radiation)? Are there electrocution hazards? Close observation and knowledge of the job is important. Examine each step carefully to find and identify hazards- the actions, conditions, and possibilities that could lead to an accident. Compiling an accurate and complete list of potential hazards will allow you to develop the recommended safe job procedures needed to prevent accidents.	Using the first two columns as a guide, decide what actions or procedures are necessary to eliminate or minimize the hazards that could lead to an accident, injury, or occupational illness. Begin by trying to: 1) engineer the hazard out; 2) provide guards, safety devices, etc.; 3) provide personal protective equipment; 4) provide job instruction training; 5) maintain good housekeeping; 6) insure good ergonomics (positioning the person in relation to the machine or other elements in such a way as to improve safety). List the recommended safe operating procedures. Begin with an action word. Say exactly what needs to be done to correct the hazard, such as, “lift using your leg muscles.” Avoid general statements such as, “be careful”, “use caution”, and “be alert”. List the required or recommended personal protective equipment necessary to perform each step of the job. Give a recommended action or procedure for each hazard. Serious hazards should be corrected immediately. The JSA should then be changed to reflect the new conditions. Finally, review your input on all three columns for accuracy and completeness. Determine if the recommended actions or procedures have been put in place. Re-evaluate the job safety analysis as necessary.

I have reviewed this hazard analysis and I understand the hazards and required precautionary actions. I will follow the requirements of this hazard analysis or notify my supervisor or Fermilab contact if I am unable to do so.

Name and ID (please print)	Signature	Date