Pivoter Design Review

Dave Pushka
Fermilab

Design Review of NOνA FD Pivoter

Outline and the Review Charge

- Charge Item 1 – Design Choices Suitable?
  - Addressed in this talk.
- Charge Item 2 – Safety Review process and results
  - Presented by Eric McHugh
- Charge Item 3 – Testing Plan Suitable?
  - Addressed in this talk.
- Charge Item 4 – Overlooked items
  - No formal presentation on this topic.
- Charge Item 5 – Meet its requirements?
  - Presentation by Ting Miao on the ability to align a simulated FHEP block to the FHEP bookend.
- Charge Item 6 – Operational Issues
  - Presented by John Voirin

Design Choices Suitable?

- Givens:
  - Assemble 31 plane blocks (recently changed to 32 planes)
  - Assemble blocks horizontally and install vertically
  - Gaps required at some frequency to allow swelling of extrusions caused by the hydrostatic pressure of the scintillator
  - Engineering Suggestions to fill after the last block is assembled and trapped between rigid bookends (designed to take the hydrostatic pressure) were rejected
  - Building tightly wrapped around the detector

First Conceptual Idea

- Block not shown on these images
- Support for block when vertical is also not shown.
- Clear that rotation about a point near the block C.G. will minimize the loads
- But…causes the cylinders to go into tension as table approaches vertical orientation.
- Would require ‘special’ double acting lift cylinders
- Clearly need to iterate on the pivot design.

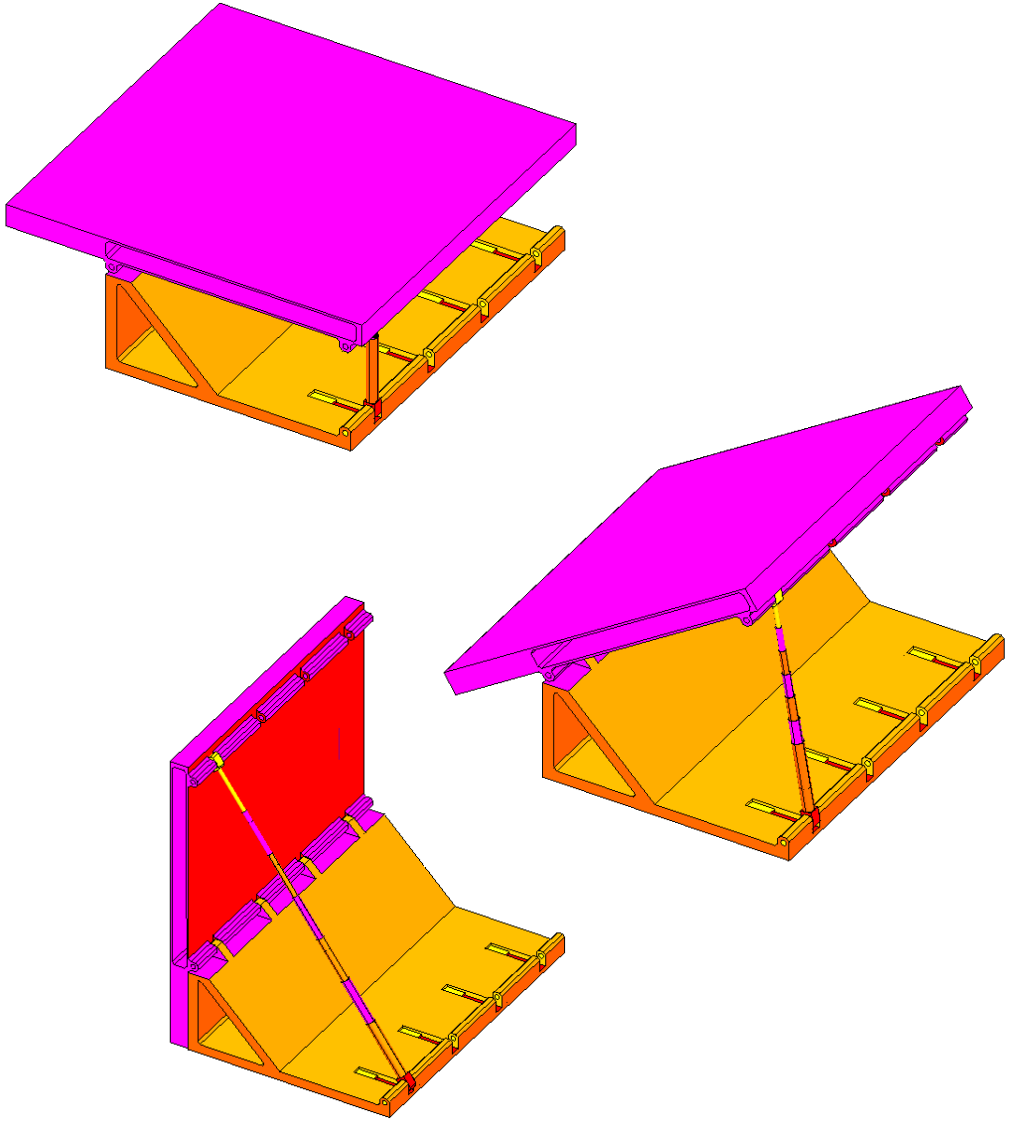

Next iteration - Presented in the TDR and subject to previous review

- Moved Pivot Point to closer to the Block C.G.
- Located Cylinders such that the loaded table (with a block on it) always put the cylinders into compression.
- Extended front ‘wheels’ to prevent tipping when the block C.G. moves forward
- Incorporated ‘kneeling cylinders’ to provide vertical travel needed to set block on the floor.
- Included a cantilevered pallet to support the block when vertical.
- But the drive wheel location was not sensible.

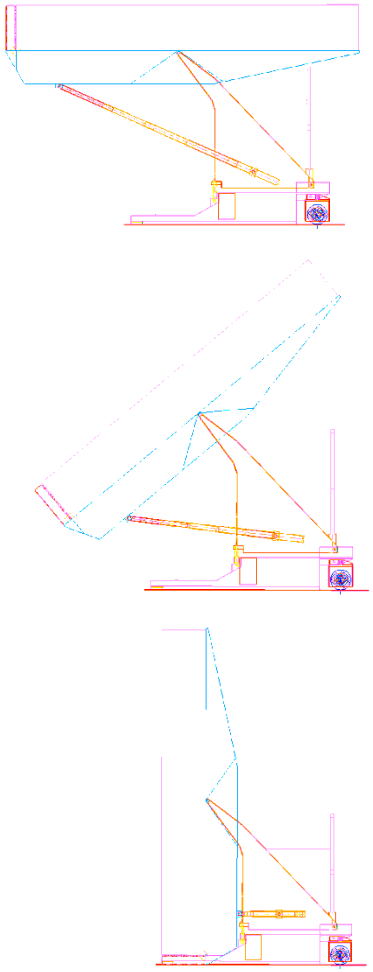

Present FHEP Design

- FHEP (full height (11/12ths and 1/6th width engineering prototype) pivoter shown in CDF.
- Uses components designed for Ash River Loads
- Drive wheel locations moved to location under center of gravity
- Not 100% pleased with pallet deflection verses load
- All else is satisfactory

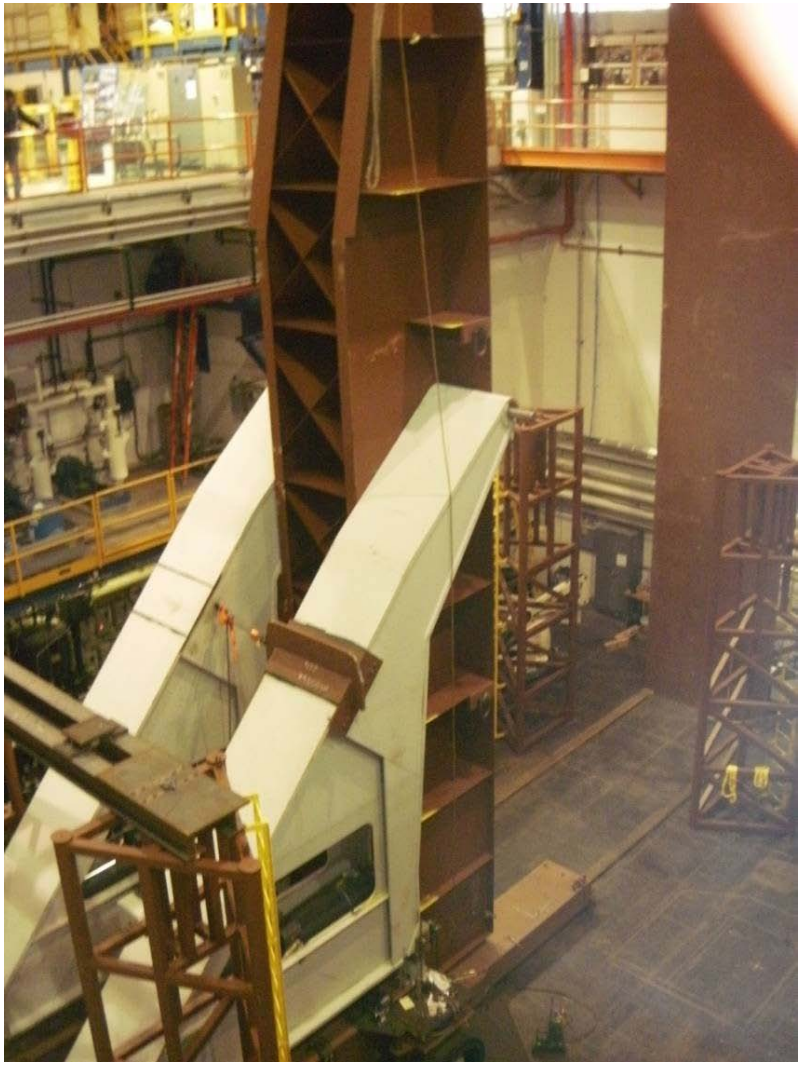

Present Design for Ash River

- Pivot Cylinder Loads for AR
- Load is the load on each cylinder
- Adjusted for heavier modules and table.
- Single acting cylinders
- Calculations predicted the need to pull (with a come-along) the empty FHEP table to the vertical position.

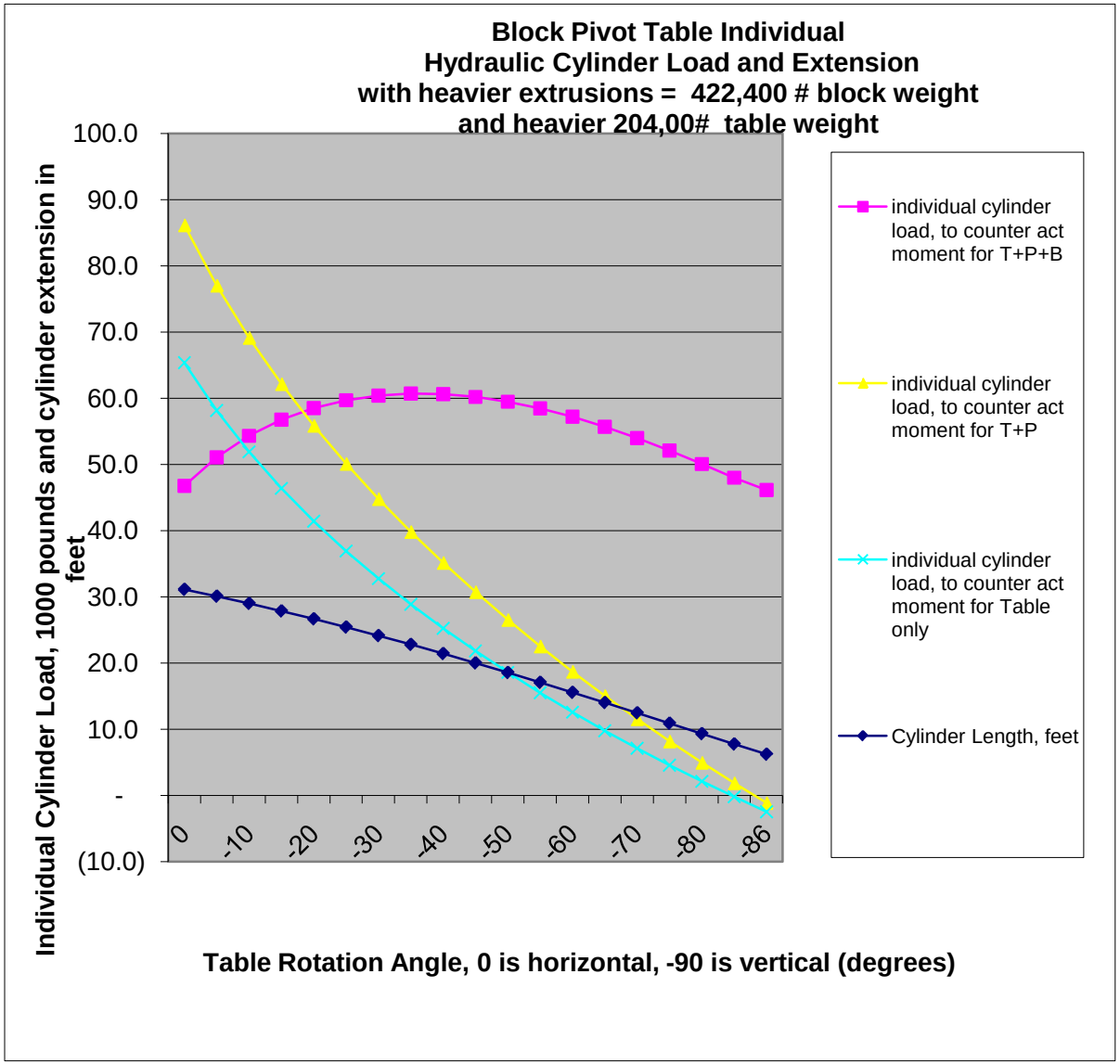

FHEP Operational Observations

- Motion Control for Lowering Block and Pallet
  - Vertical Motion is provided by lowering kneeling jacks, results in about a 1.23 degree rotation of table and pallet
  - Pivot cylinders rotation should be stopped about 2 to 5 inches short of fully closed so that the last bit of block rotation from horizontal to vertical is made with the kneeling cylinder movement.
- Mating of Table to Upper Weldments is not easy – requires a person to observe pin and hole alignment.
  - Intend to mount cameras with video feed, purchase requisition written
  - Needed when the FHEP block + table is re-installed
- Flatness of table and Bookend surfaces met requirements.
  - See Ting's talk for measurements and previous review comments.

Next Refinements for Ash River

- Table
  - Being designed by Ernie Villegas
  - Smaller sections, under the 10 ton crane limit
  - Incorporate adjustable pallet support arms to align pallet perpendicular to table.
  - Block alignment fixtures added to FHEP table and if shown useful, to the AR table.
- Drive and Support Assy
  - Cam-follower support modified to allow for rail c-c and width variations.
  - Counterweight capability added to reduce bending stress on lower weldment front arms as block C.G.
  - Adding capability to include second pair of drive wheel assemblies to increase torque and reduce speed.

Refinements for Ash River

- Changed Pivot Cylinder Seals from Long life (hard) seals to standard seals to reduce cylinder stick-slip motion.
  - At an anticipated 30 to 50 cycles, long life (~100,000 cycle) seals are not really necessary.
- Added Amber Strobe light wired to flash when pivoting (also being installed at CDF for the FHEP).
- Will change programming for the Kneeling Cylinders to allow negative displacement values – need to contact vendor for quote.
- Table using more bolted connections in lieu of a few (~6) large weldments as in the previously reviewed design.
  - Remains to be seen how the flatness of the assembly compares to the weldments.

Testing Program

- Engineering Note 279 documents the test program.
  - Kneeling Cylinders tested to full load of FHEP Table, Pallet and FHEP plastic in the vertical position with shield block test weights.
    - Pallet to table connection prevents testing to full AR block load.
  - Pivot Cylinders tested to 450 psi cylinder pressure (1900 psi design, 1350 psi expected Ash River Operating pressure).
  - Drive motors tested and shown to move full load of FHEP Table, Pallet and FHEP plastic.
    - Unable to create enough room for shield block loading to test the ability to move the full AR table + block load.

Testing Plan

- The Most Significant Test, Installing the FHEP Block, Remains to be Performed.
  - This is 100% comparable to not doing a full string test on the LHC low beta quads.
  - Would be best to perform this test prior to finishing the assembly of the AR pivoter so any needed changes can be incorporated.
- I do not know how the block, table and pallet will act – as three independent rigid bodies or as two semi-rigid bodies and one flexible body – or three semi-rigid bodies. Attempting to install the FHEP will provide vitally needed insight.

Reidar's photograph provides a sense of scale.

Imagine a rigid block setting on that small horizontal surface.

Now imagine a block of flimsy, maybe wobbly plastic.

Ash River Tweaks being Considered

- Reduce Translation Velocity to less than 1 mph (provisions being implemented).
- Consider Adding Hydraulic Rams to fine tune final 1 to 2 inches of horizontal travel.
- Change Kneeling Cylinder programming to allow Negative Displacement Values to be requested.
- Adjustable Mechanical Stops on the Kneeling Cylinders to prevent leak down when the system is off (presently stays put when powered).
- Examining alternative pivot cylinder fixed pivot locations to allow the empty table to get closer to vertical. But this comes at the expense of reduced margins when loaded with the block.