| REV | DESCRIPTION | DATE |
|---|---|---|
| | | |

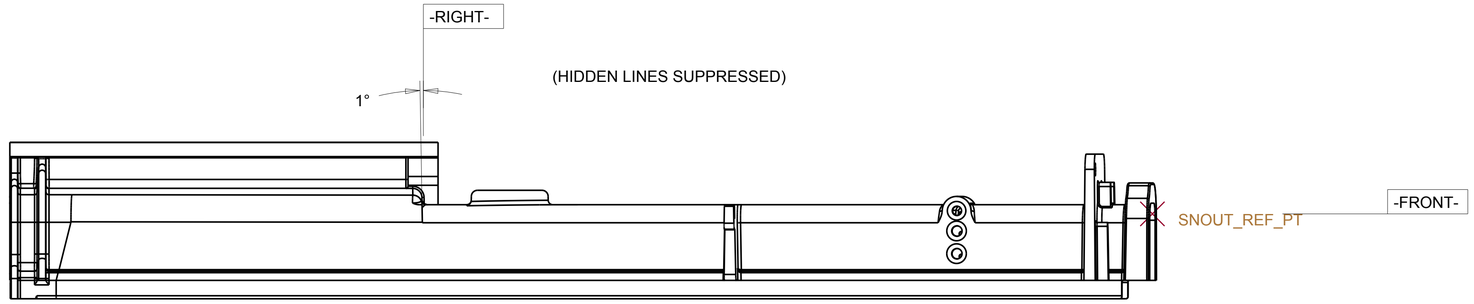


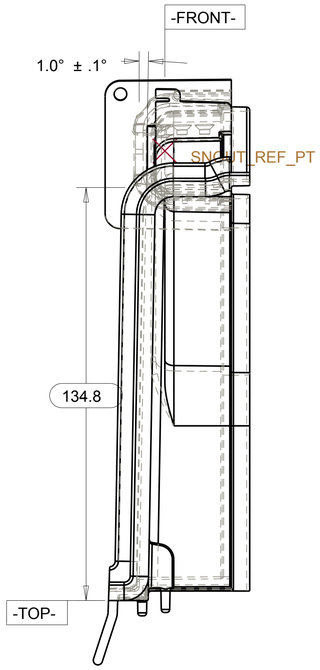


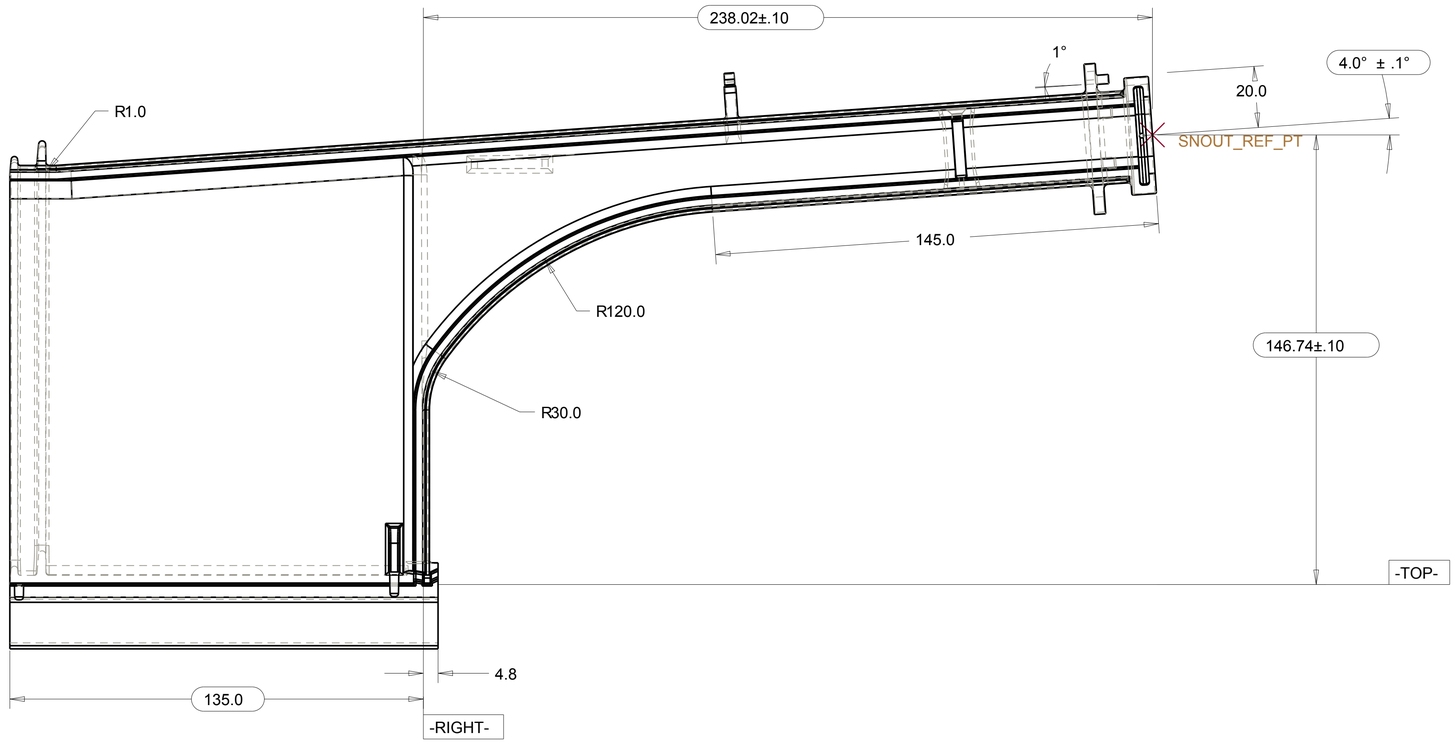


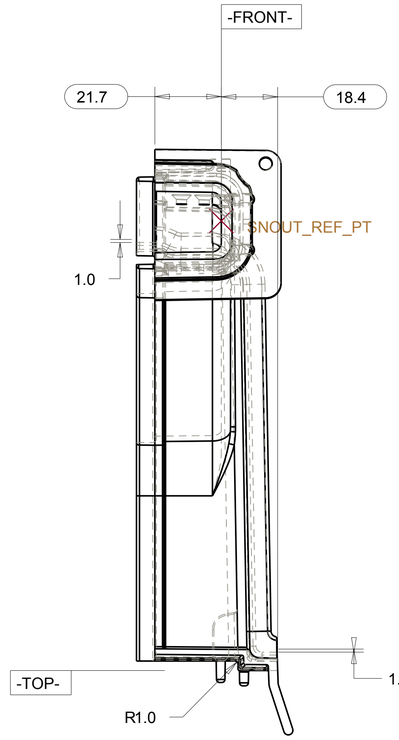


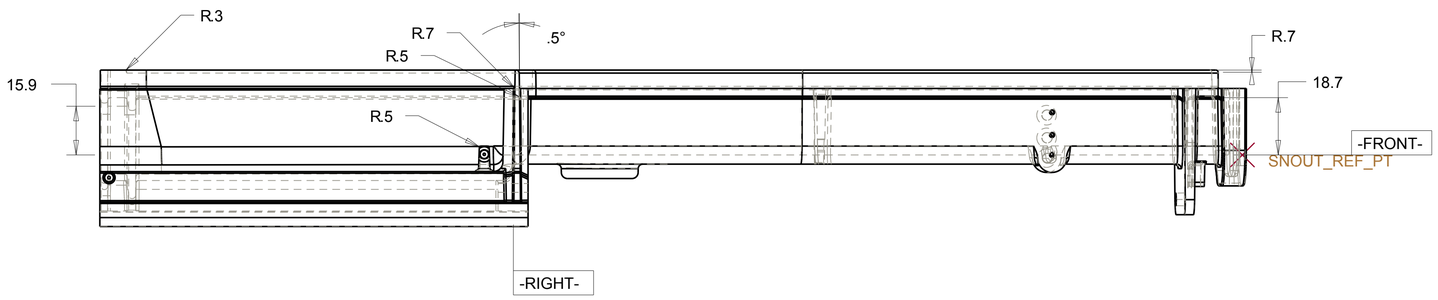


| NOTES | |
|---|---|
| 1 | MATERIAL: TYPE I RIGID PVC, GEON M3500 OR M3800, BLACK |
| 2 | DO NOT USE MOLD RELEASE |
| 3 | MATERIAL REGRIND NOT TO EXCEED SUPPLIER RECOMMENDATIONS |
| 4 | PART VOLUME: 160 CC (9.8 IN^3) |
| 5 | QUANTITIES: 12,500 (14KT DETECTOR) |

| TOLERANCES | | ORIGINATOR | T. Chase | 24-Jan-10 |
|---|---|---|---|---|
| .X | ± 0.1 | DRAWN BY | T. Chase | 24-Jan-10 |
| .XX | ± 0.01 | CHECKED | | |
| .XXX | ± 0.001 | APPROVED | | |
| ANGLES | ± 0.5 | USED ON: Near Detector Modules | | |

# NOvA Experiment (Fermilab E929)

## University of Minnesota

# Near Detector Snout, Back

| Finish | Model Type: PART | Model File Name: FD_4_SNOUT_BACK_REV | Drawing File Name: FD_4_SNOUT_BACK_REV | |
|---|---|---|---|---|
| | Scale 1.000 :1 | Drawing Number | Revision | Sheet 1 of 6 |
| | All dimensions are in mm unless specified otherwise | | | |

| REV | DESCRIPTION | DATE |
|---|---|---|
| | | |

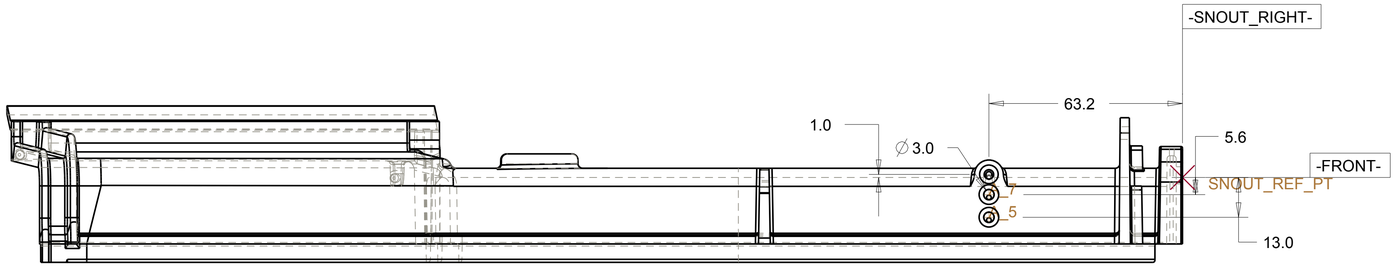


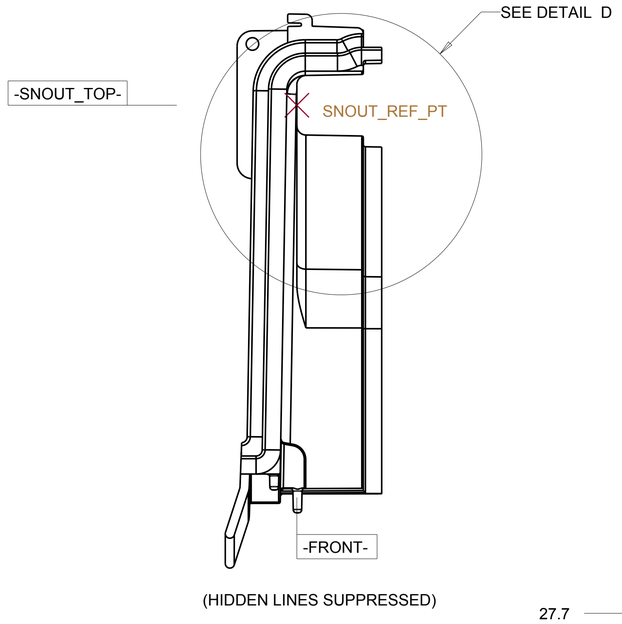


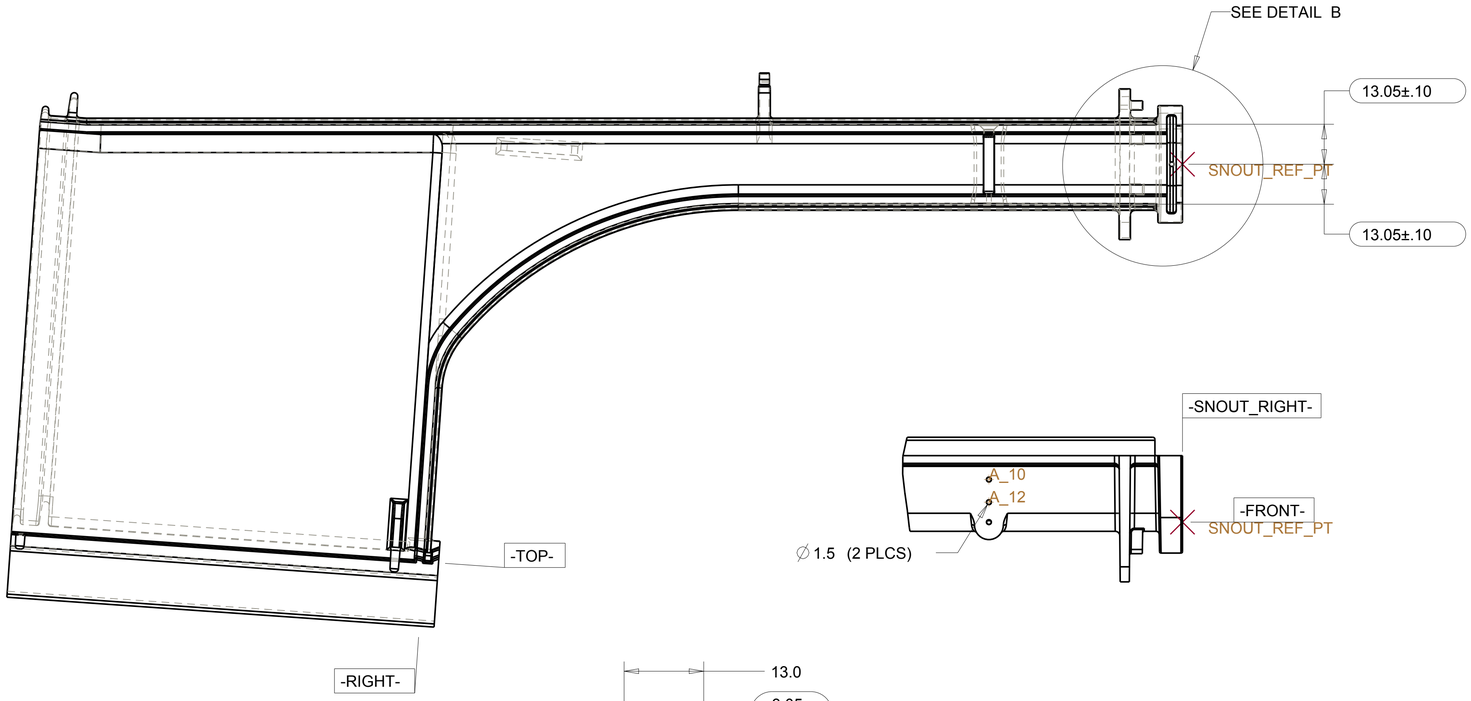


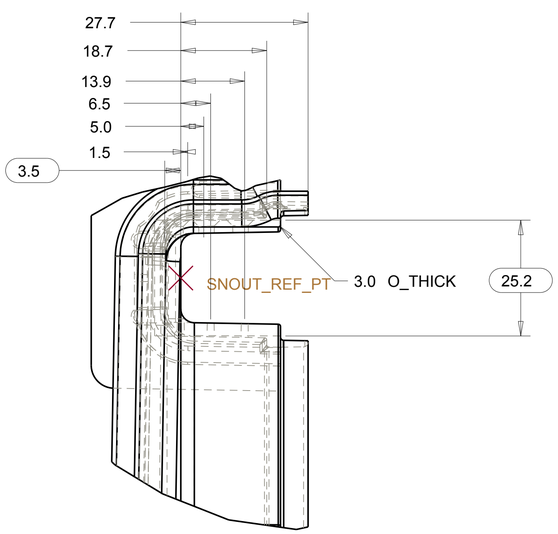


DETAIL D
SCALE 1.500

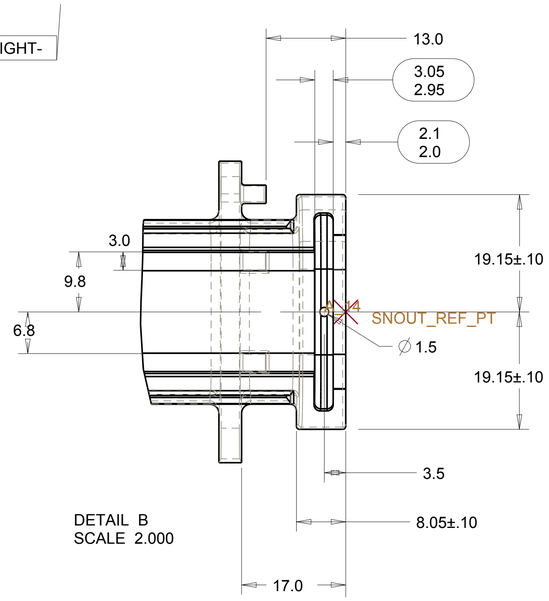


DETAIL B
SCALE 2.000




| TOLERANCES | | ORIGINATOR | T. Chase | 24-Jan-10 |
|---|---|---|---|---|
| .X | ± 0.1 | DRAWN BY | T. Chase | 24-Jan-10 |
| .XX | ± 0.01 | CHECKED | | |
| .XXX | ± 0.001 | APPROVED | | |
| ANGLES | ± 0.5 | USED ON: Near Detector Modules | | |

# NOvA Experiment (Fermilab E929)

## University of Minnesota

# Near Detector Snout, Back

| Model Type: | Model File Name: | Drawing File Name: | |
|---|---|---|---|
| PART | FD_4_SNOUT_BACK_REV | FD_4_SNOUT_BACK_REV | |
| Scale | Drawing Number | Revision | Sheet |
| 1.000 :1 | | | 2 of 6 |
| Finish | All dimensions are in mm unless specified otherwise | | |

| REV | DESCRIPTION | DATE |
|---|---|---|

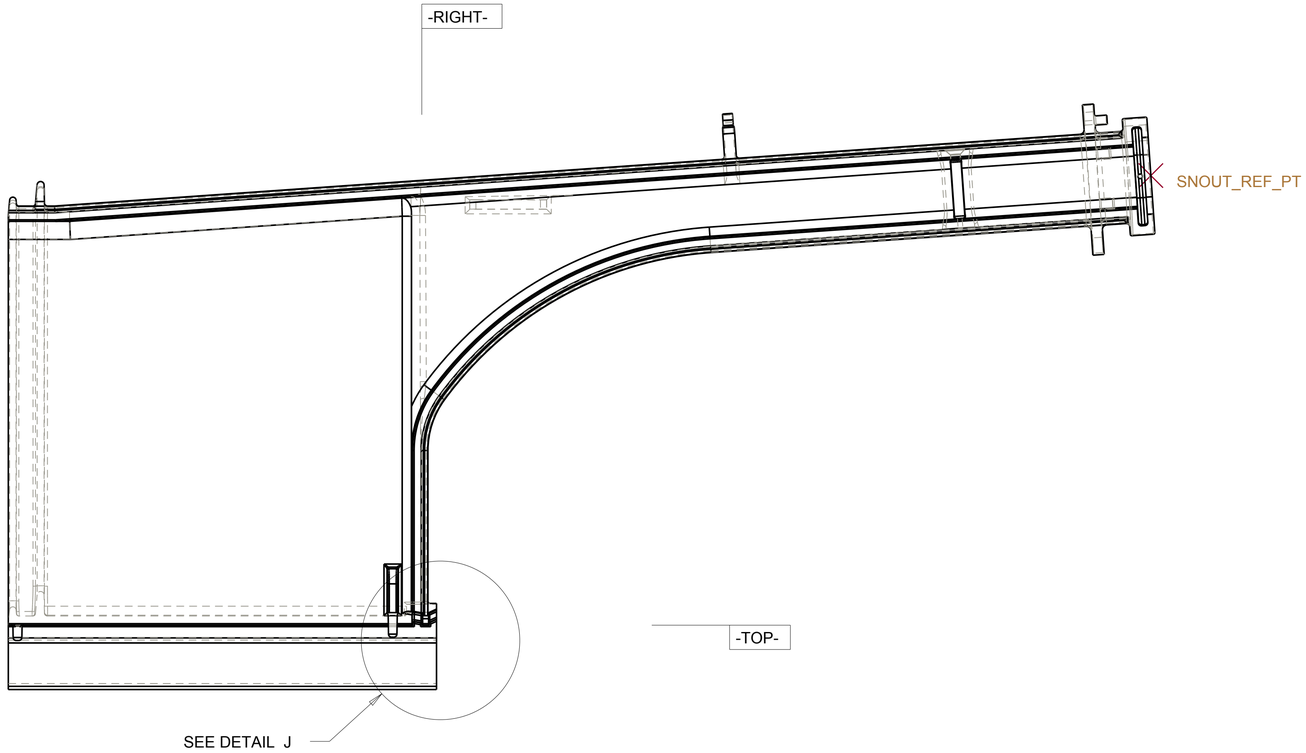


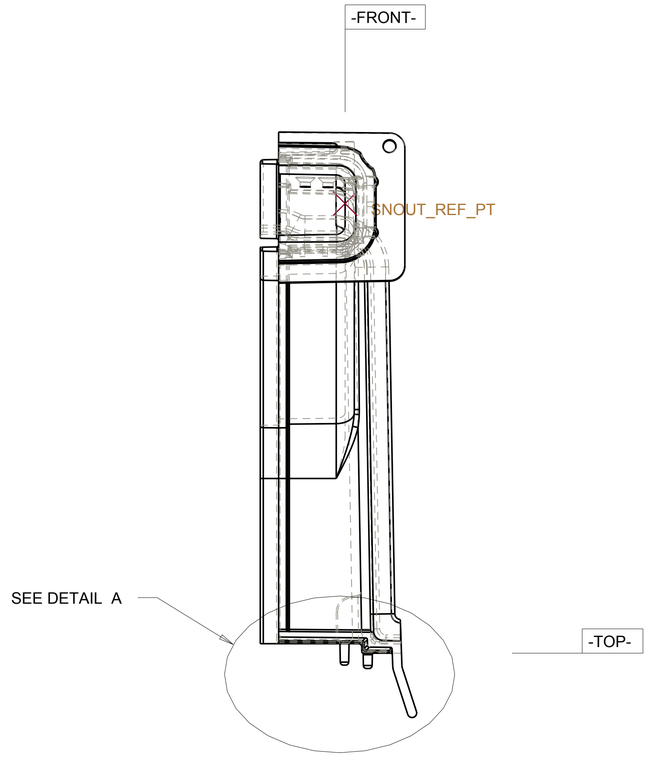


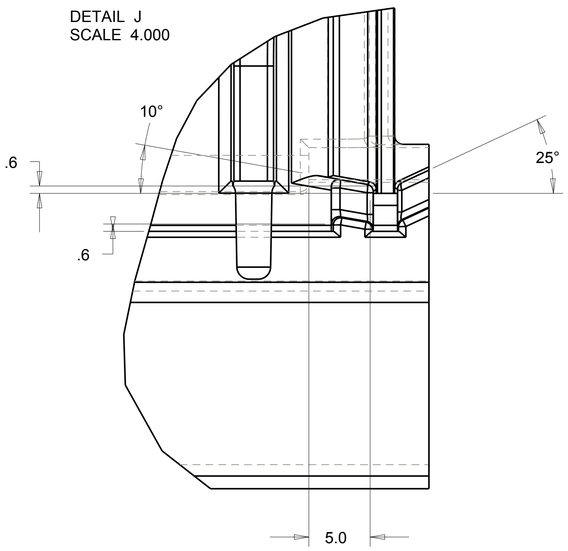


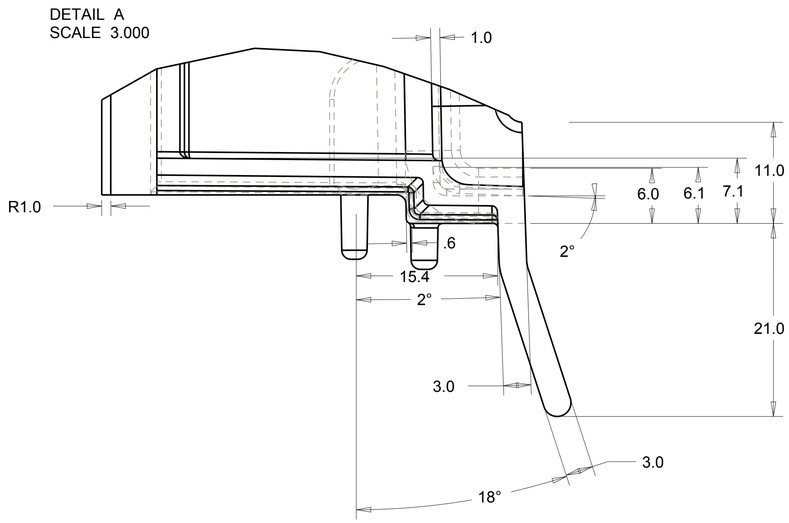


| TOLERANCES | | ORIGINATOR | T. Chase | 26-Jan-10 |
|---|---|---|---|---|
| .X | ± 0.1 | DRAWN BY | T. Chase | 26-Jan-10 |
| .XX | ± 0.01 | CHECKED | | |
| .XXX | ± 0.001 | APPROVED | | |
| ANGLES | ± 0.5 | USED ON: Near Detector Modules | | |

# NOvA Experiment (Fermilab E929)

## University of Minnesota

# Near Detector Snout, Back

| | Model Type: | Model File Name: | Drawing File Name: | |
|---|---|---|---|---|
| | PART | FD_4_SNOUT_BACK_REV | FD_4_SNOUT_BACK_REV | |
| | Scale | Drawing Number | Revision | Sheet |
| | 1.000 :1 | | | 3 of 6 |
| Finish | All dimensions are in mm unless specified otherwise | | | |

| REV | DESCRIPTION | DATE |
|---|---|---|

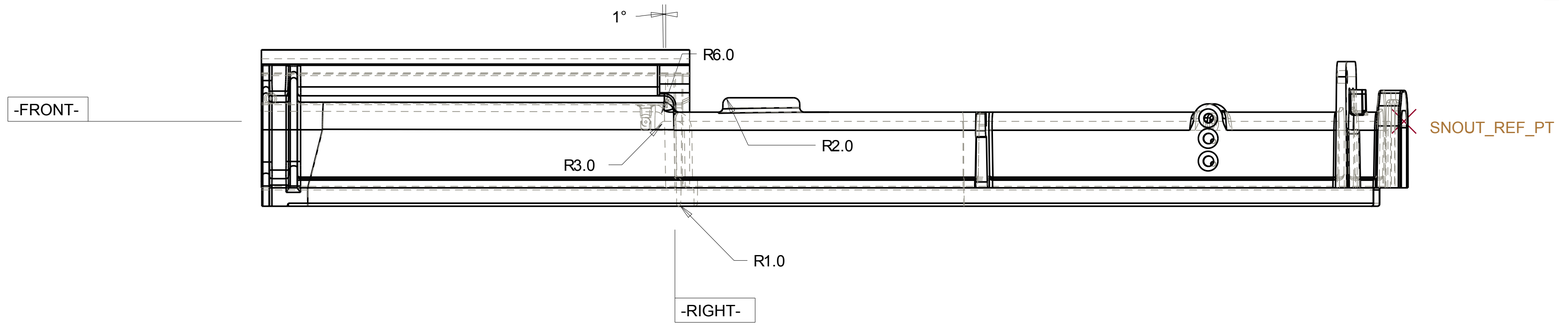


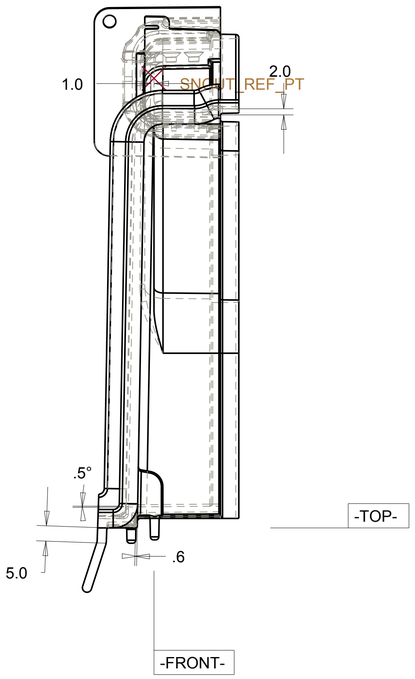


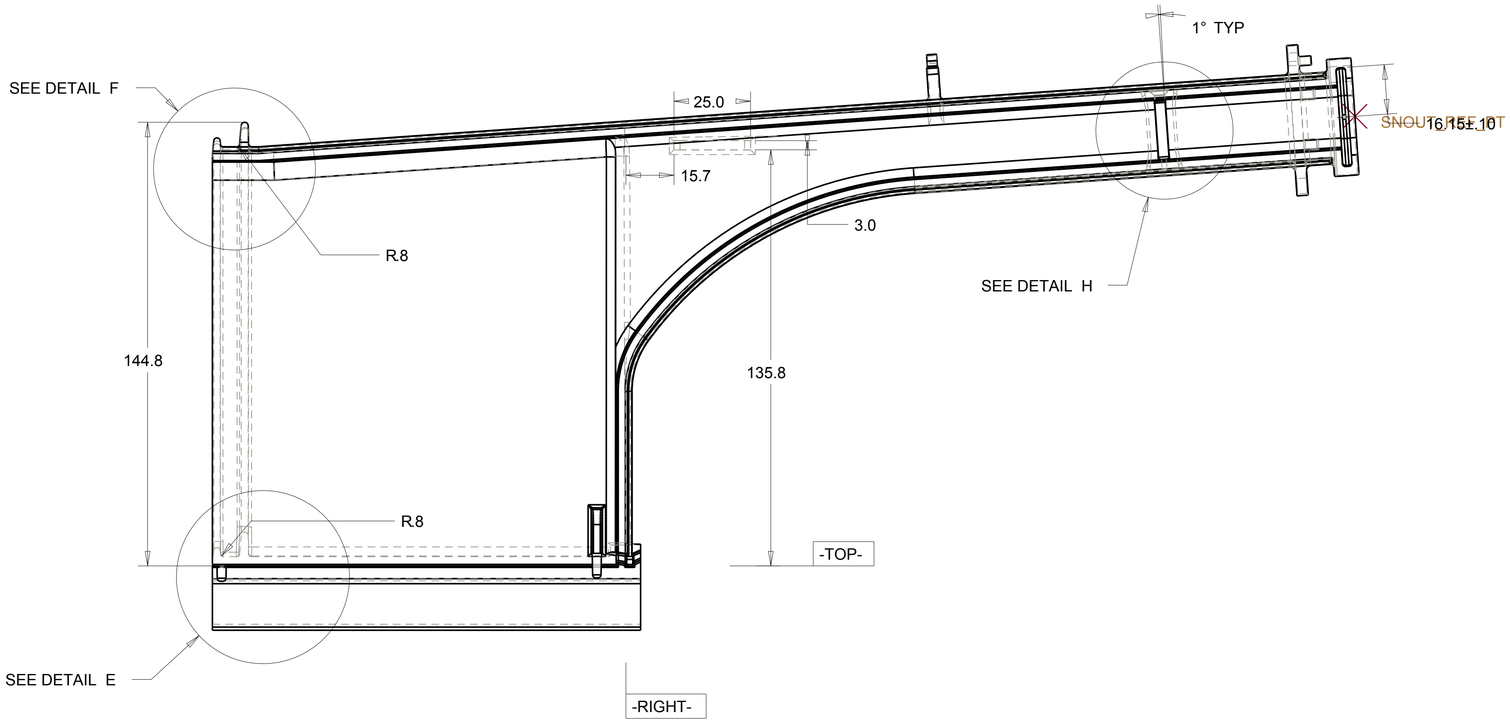


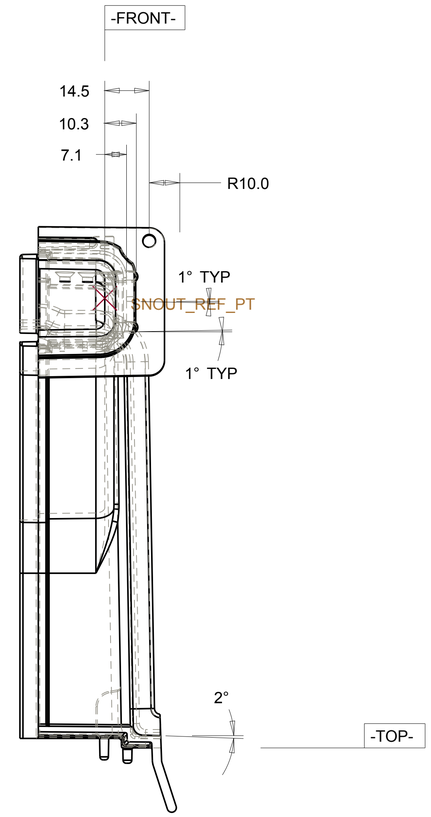


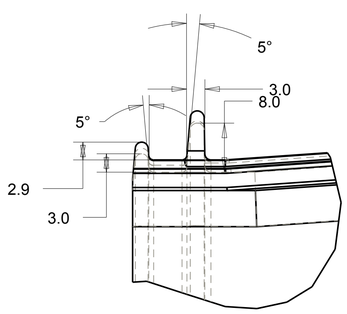


DETAIL F
SCALE 2.000

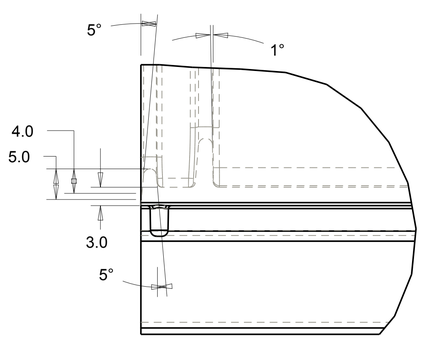


DETAIL E
SCALE 2.000

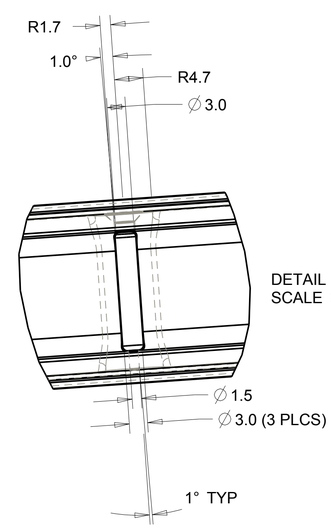


DETAIL H
SCALE 2.000

| | | | |
|---|---|---|---|
| TOLERANCES | | ORIGINATOR | T. Chase | 29-Jan-10 |
| .X | ± 0.1 | DRAWN BY | T. Chase | 29-Jan-10 |
| .XX | ± 0.01 | CHECKED | | |
| .XXX | ± 0.001 | APPROVED | | |
| ANGLES | ± 0.5 | USED ON: Near Detector Modules | | |

# NOvA Experiment (Fermilab E929)

## University of Minnesota

# Near Detector Snout, Back

| | | | | |
|---|---|---|---|---|
| | Model Type: PART | Model File Name: FD_4_SNOUT_BACK_REV | | Drawing File Name: FD_4_SNOUT_BACK_REV |
| | Scale 1.000 :1 | Drawing Number | Revision | Sheet 4 of 6 |
| Finish | All dimensions are in mm unless specified otherwise | | | |

| REV | DESCRIPTION | DATE |
|---|---|---|
| | | |

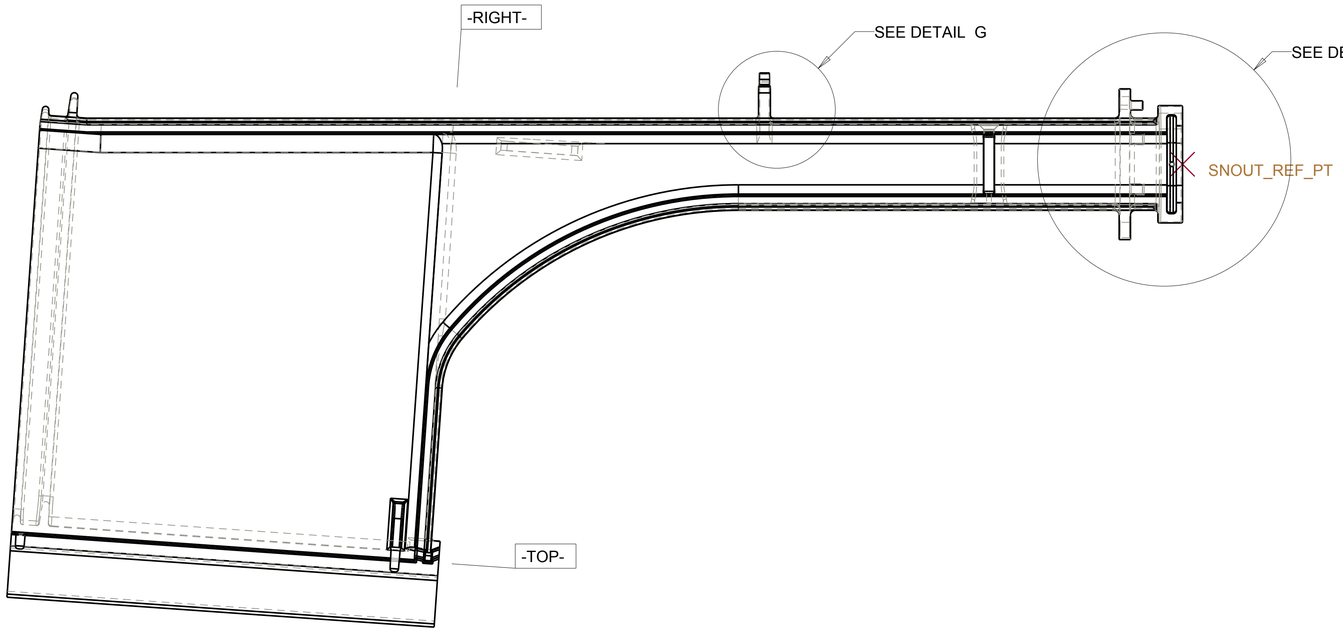


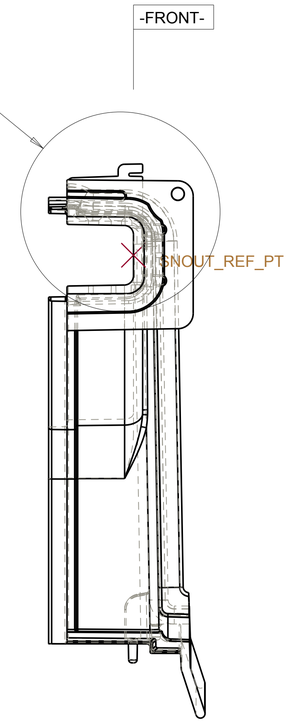


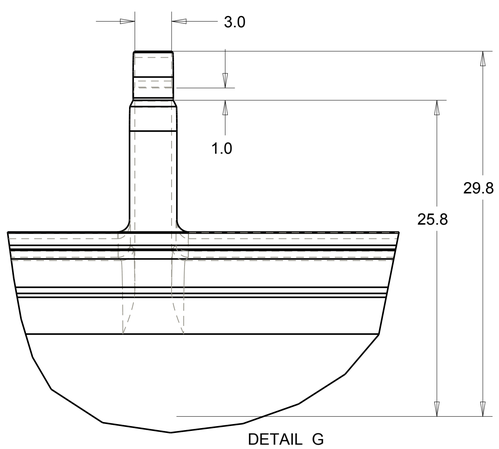


DETAIL G
SCALE 4.000

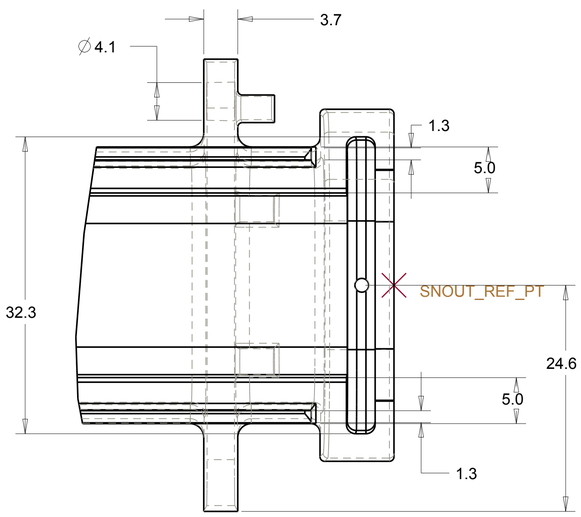


DETAIL I
SCALE 3.000

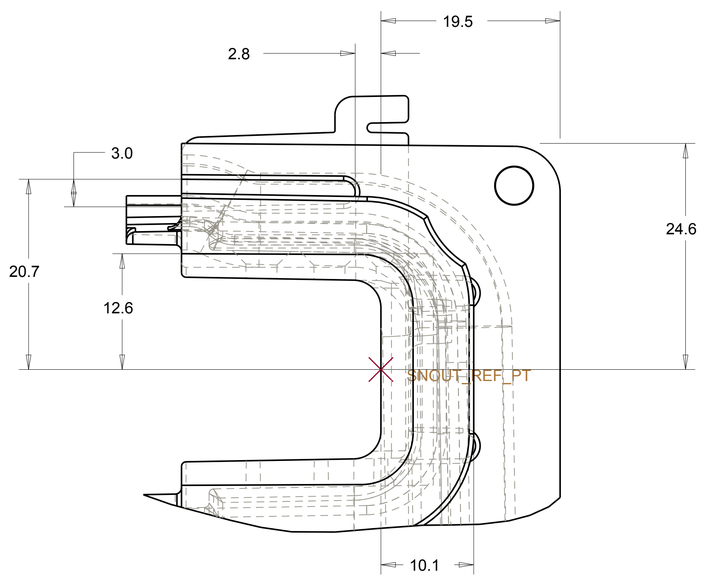


DETAIL C
SCALE 3.000

| TOLERANCES | | ORIGINATOR | T. Chase | 29-Jan-10 |
|---|---|---|---|---|
| .X | ± 0.1 | DRAWN BY | T. Chase | 29-Jan-10 |
| .XX | ± 0.01 | CHECKED | | |
| .XXX | ± 0.001 | APPROVED | | |
| ANGLES | ± 0.5 | USED ON: Near Detector Modules | | |

NOvA Experiment (Fermilab E929)

University of Minnesota

# Near Detector Snout, Back

| | Model Type: | Model File Name: | Drawing File Name: | |
|---|---|---|---|---|
| | PART | FD_4_SNOUT_BACK_REV | FD_4_SNOUT_BACK_REV | |
| | Scale | Drawing Number | Revision | Sheet |
| | 1.000 :1 | | | 5 of 6 |
| Finish | All dimensions are in mm unless specified otherwise | | | |

| REV | DESCRIPTION | DATE |
|---|---|---|

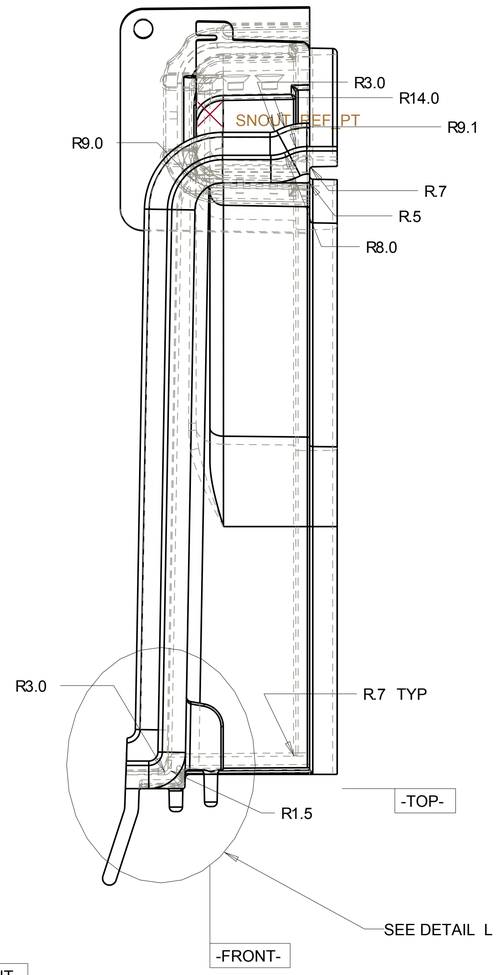


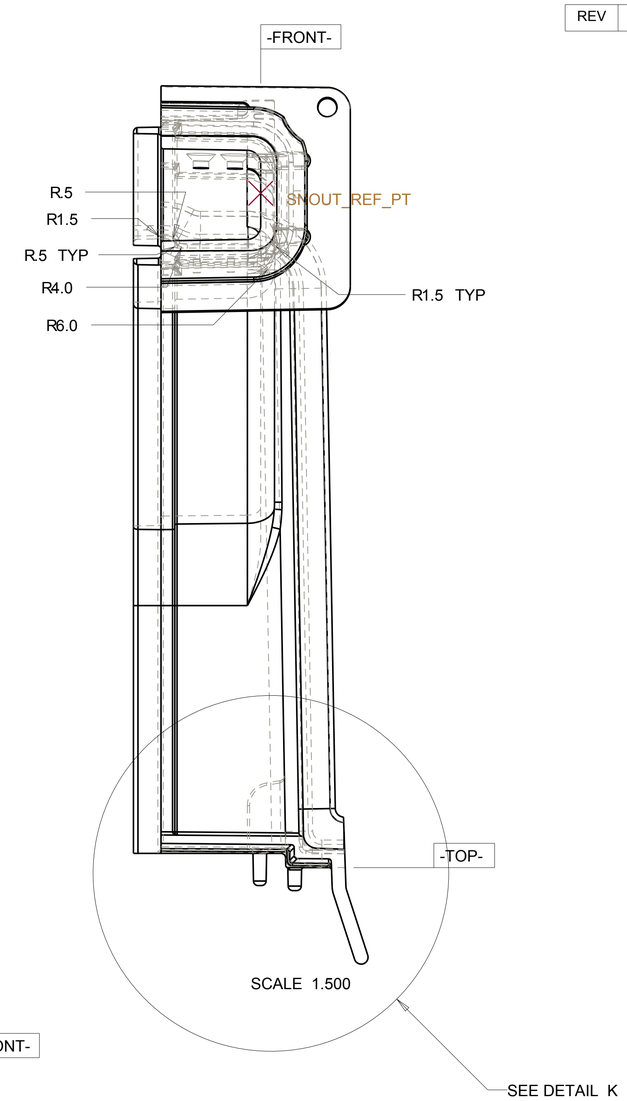


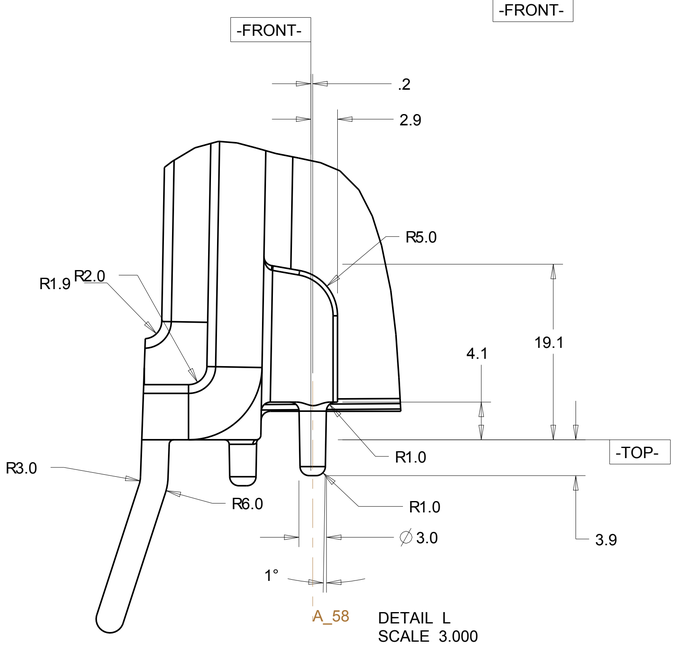


DETAIL L
SCALE 3.000
(HIDDEN LINES SUPPRESSED)

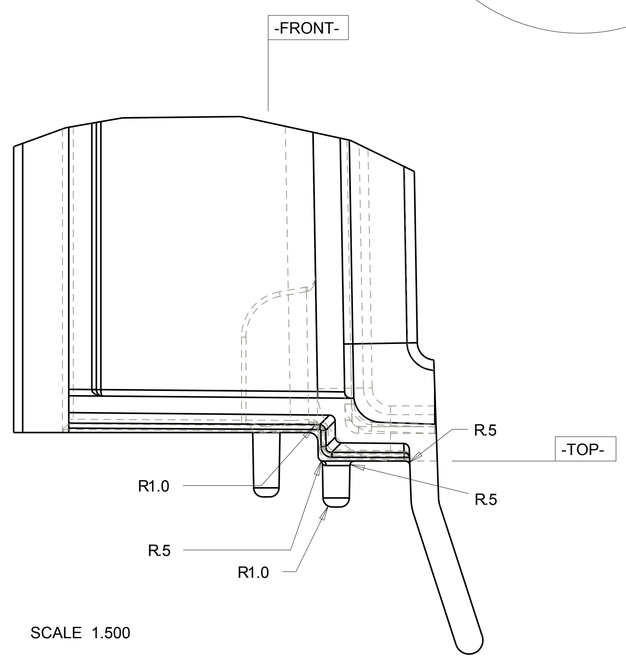


SCALE 1.500

DETAIL K
SCALE 3.000

| | | | | |
|---|---|---|---|---|
| TOLERANCES | | ORIGINATOR | | 19-Feb-11 |
| .X | ± 0.1 | DRAWN BY | | 19-Feb-11 |
| .XX | ± 0.01 | CHECKED | | |
| .XXX | ± 0.001 | APPROVED | | |
| ANGLES | ± 0.5 | USED ON: | | |

NOvA Experiment (Fermilab E929)

University of Minnesota

| | | | |
|---|---|---|---|
| | Model Type: PART | Model File Name: FD_4_SNOUT_BACK_REV | Drawing File Name: FD_4_SNOUT_BACK_REV |
| | Scale 1.000 :1 | Drawing Number | Revision / Sheet 6 of 6 |
| Finish | All dimensions are in mm unless specified otherwise | | |