REV	DESCRIPTION	DATE

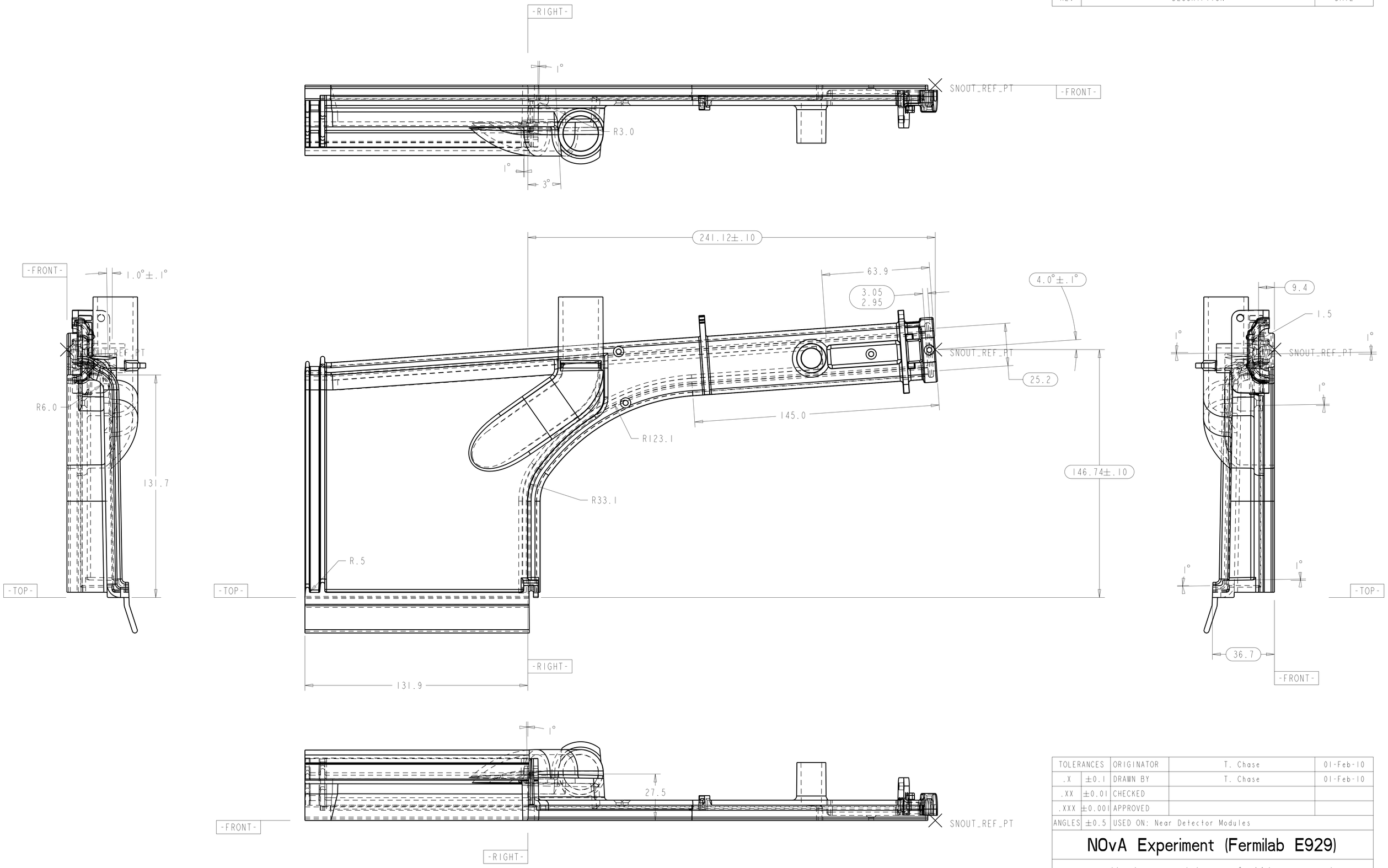

NOTES	
1	MATERIAL: TYPE I RIGID PVC, GEON M3500 OR M3800, BLACK
2	DO NOT USE MOLD RELEASE
3	MATERIAL REGRIND NOT TO EXCEED SUPPLIER RECOMMENDATIONS
4	PART VOLUME: 160 CC (10 IN^3)
5	QUANTITIES: 12,500 (14 KT DETECTOR)

TOLERANCES		ORIGINATOR	T. Chase	01-Feb-10
.X	±0.1	DRAWN BY	T. Chase	01-Feb-10
.XX	±0.01	CHECKED		
.XXX	±0.001	APPROVED		
ANGLES	±0.5	USED ON: Near Detector Modules		

NOvA Experiment (Fermilab E929)

University of Minnesota

Near Detector Snout, Front

	Model Type:	Model File Name:	Drawing File Name:	
	PART	FD_4_SNOUT_FRONT	FD_4_SNOUT_FRONT	
	Scale	Drawing Number	Revision	Sheet
	1.000:1			1 of 6
Finish	All dimensions are in mm unless specified otherwise			

REV	DESCRIPTION	DATE

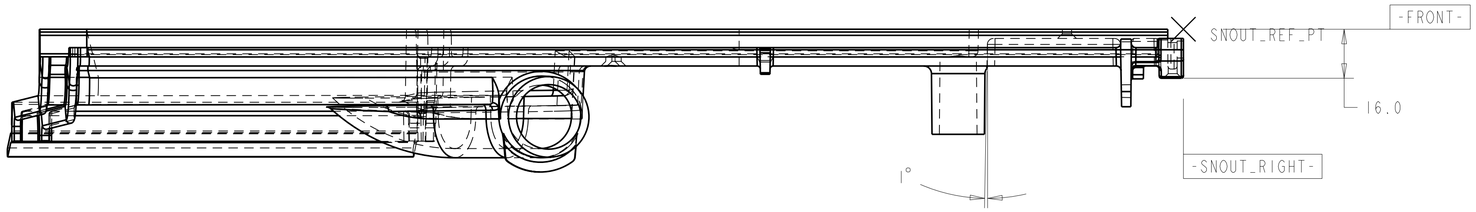

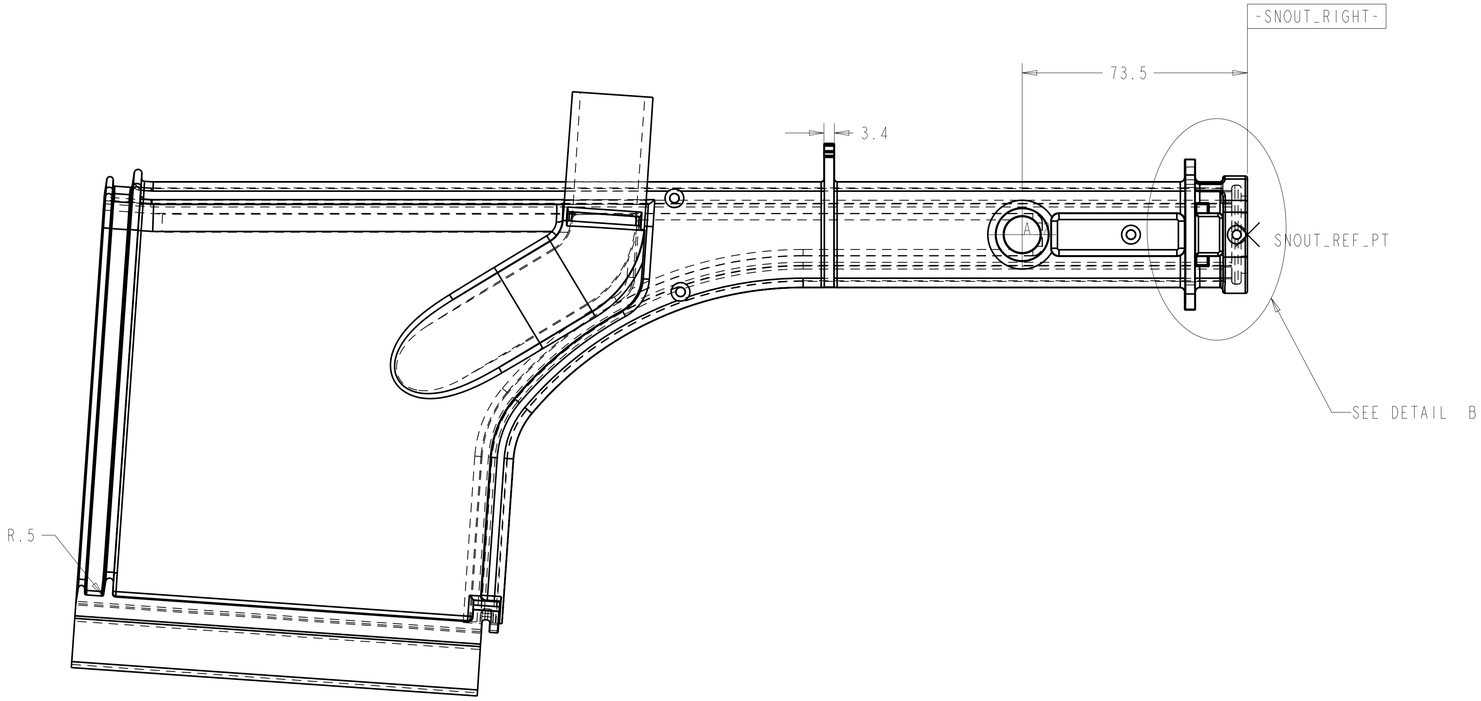

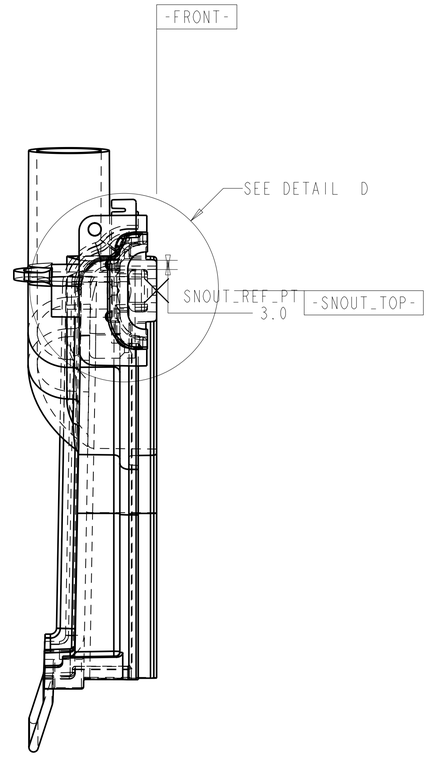

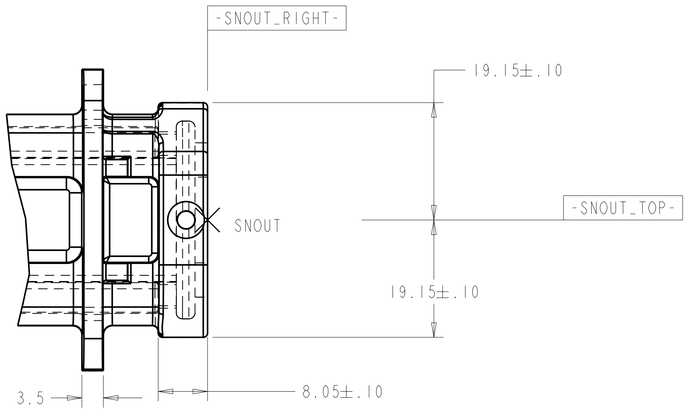

DETAIL B
SCALE 2.000

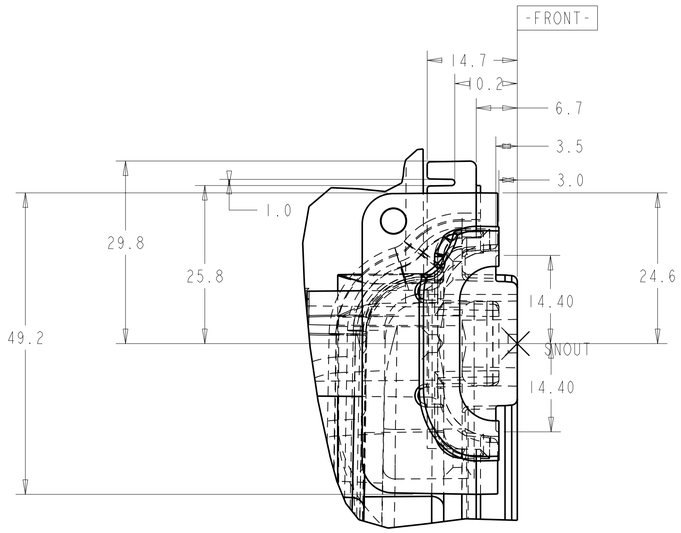

DETAIL D
SCALE 2.000

TOLERANCES		ORIGINATOR	T. Chase	01-Feb-10
.X	±0.1	DRAWN BY	T. Chase	01-Feb-10
.XX	±0.01	CHECKED		
.XXX	±0.001	APPROVED		
ANGLES	±0.5	USED ON: Near Detector Modules		

NOvA Experiment (Fermilab E929)

University of Minnesota

Near Detector Snout, Front

Finish	Model Type: PART	Model File Name: FD_4_SNOUT_FRONT	Drawing File Name: FD_4_SNOUT_FRONT
	Scale 1.000:1	Drawing Number	Revision / Sheet 2 of 6
	All dimensions are in mm unless specified otherwise		

REV	DESCRIPTION	DATE

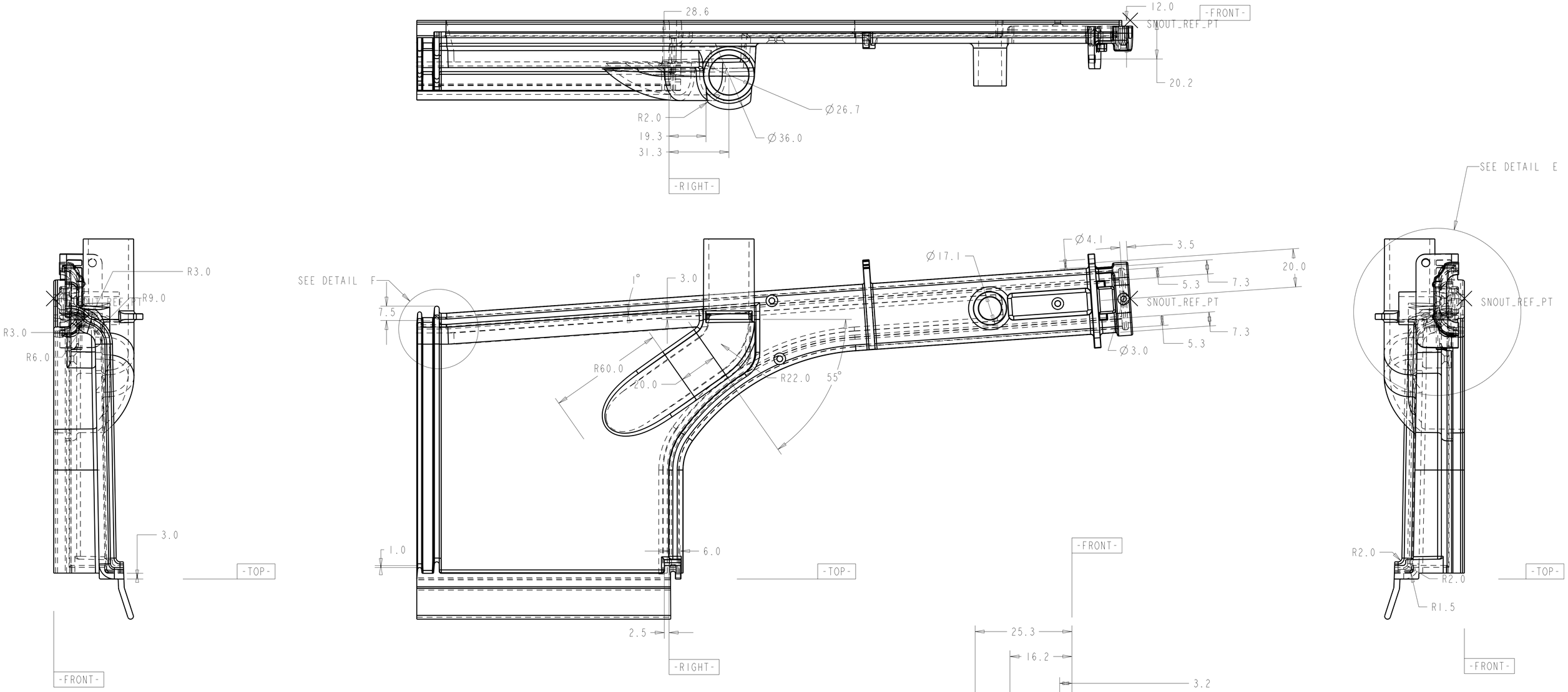

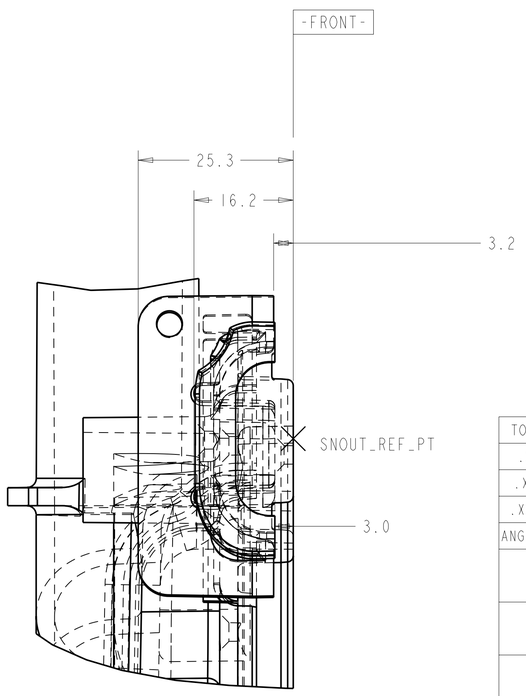

DETAIL E
SCALE 2.000

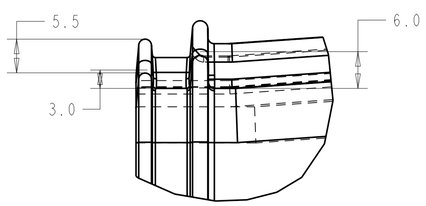

DETAIL F
SCALE 2.000

TOLERANCES		ORIGINATOR	T. Chase	01-Feb-10
.X	±0.1	DRAWN BY	T. Chase	01-Feb-10
.XX	±0.01	CHECKED		
.XXX	±0.001	APPROVED		
ANGLES	±0.5	USED ON: Near Detector Modules		

NOvA Experiment (Fermilab E929)

University of Minnesota

Near Detector Snout, Front

Finish	Model Type: PART	Model File Name: FD_4_SNOUT_FRONT	Drawing File Name: FD_4_SNOUT_FRONT
	Scale 1.000:1	Drawing Number	Revision / Sheet 3 of 6
	All dimensions are in mm unless specified otherwise		

REV	DESCRIPTION	DATE

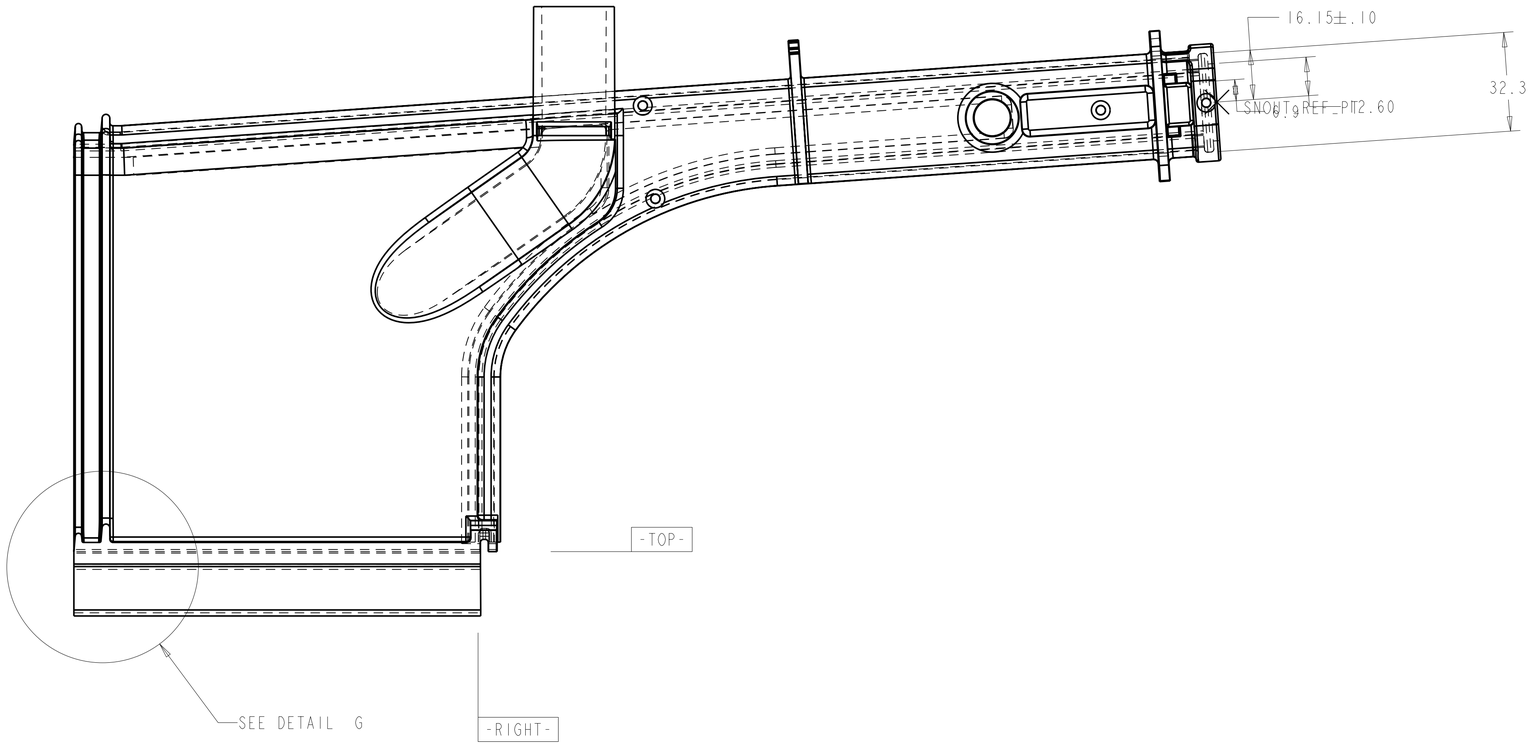

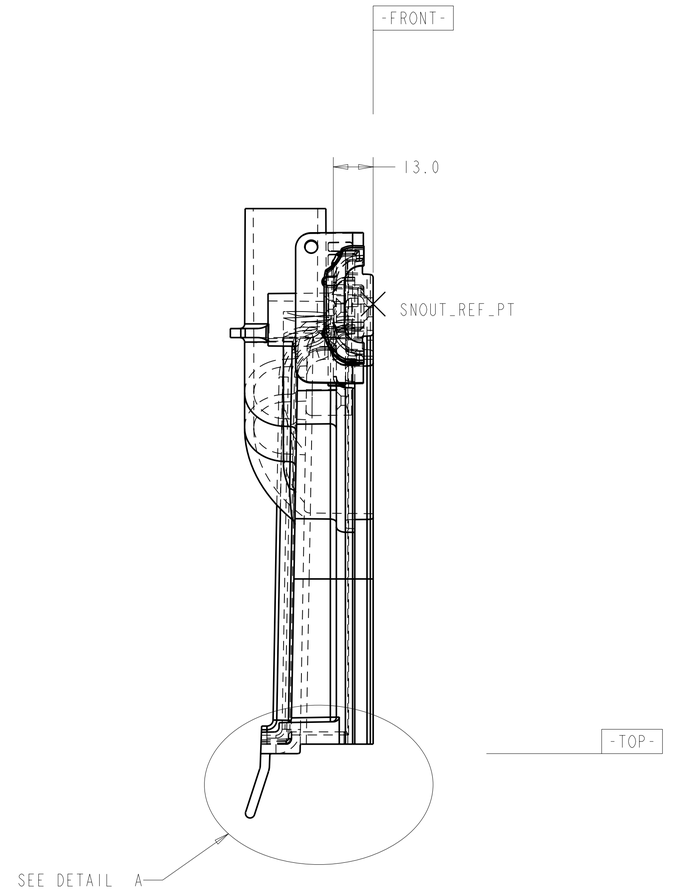

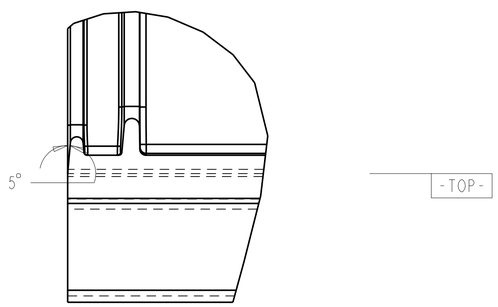

DETAIL G
SCALE 2.000

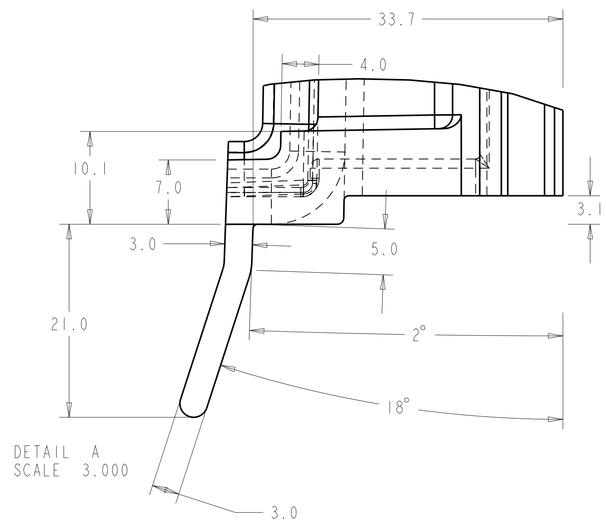

DETAIL A
SCALE 3.000

TOLERANCES		ORIGINATOR	T. Chase	02-Feb-10
.X	±0.1	DRAWN BY	T. Chase	02-Feb-10
.XX	±0.01	CHECKED		
.XXX	±0.001	APPROVED		
ANGLES	±0.5	USED ON: Near Detector Modules		

NOvA Experiment (Fermilab E929)

University of Minnesota

Near Detector Snout, Front

	Model Type: PART	Model File Name: FD_4_SNOUT_FRONT	Drawing File Name: FD_4_SNOUT_FRONT	
	Scale 1.000:1	Drawing Number	Revision	Sheet 4 of 6
Finish	All dimensions are in mm unless specified otherwise			

REV	DESCRIPTION	DATE

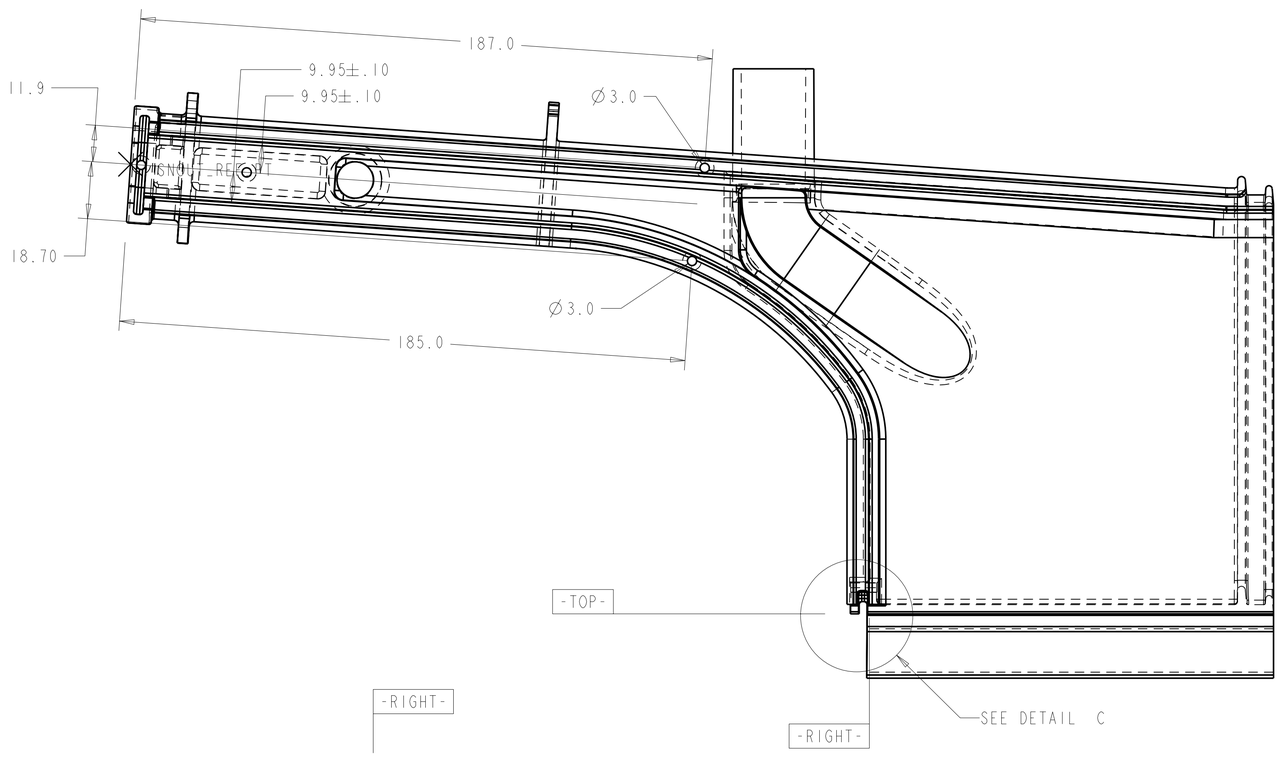

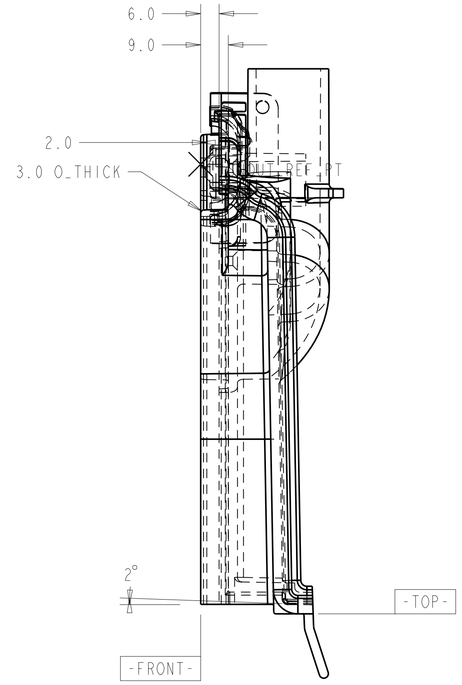

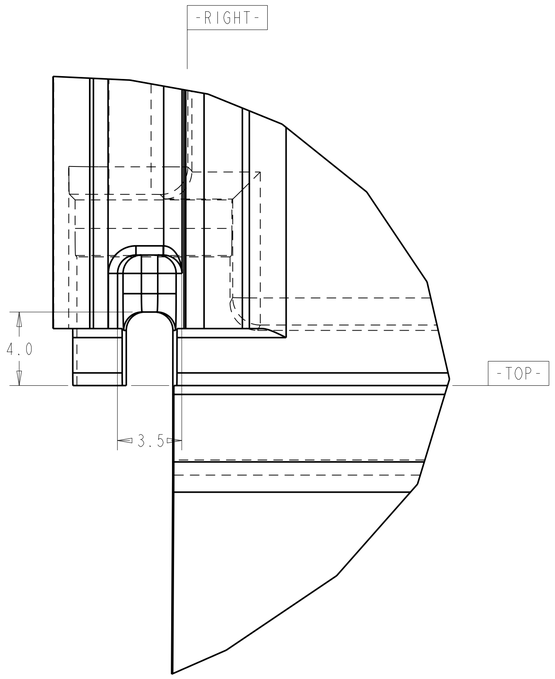

DETAIL C
SCALE 6.000

TOLERANCES		ORIGINATOR	T. Chase	09-Feb-10
.X	±0.1	DRAWN BY	T. Chase	09-Feb-10
.XX	±0.01	CHECKED		
.XXX	±0.001	APPROVED		
ANGLES	±0.5	USED ON: Near Detector Modules		

NOvA Experiment (Fermilab E929)

University of Minnesota

Near Detector Snout, Front

	Model Type: PART	Model File Name: FD_4_SNOUT_FRONT	Drawing File Name: FD_4_SNOUT_FRONT	
	Scale 1.000:1	Drawing Number	Revision	Sheet 5 of 6
Finish	All dimensions are in mm unless specified otherwise			

REV	DESCRIPTION	DATE

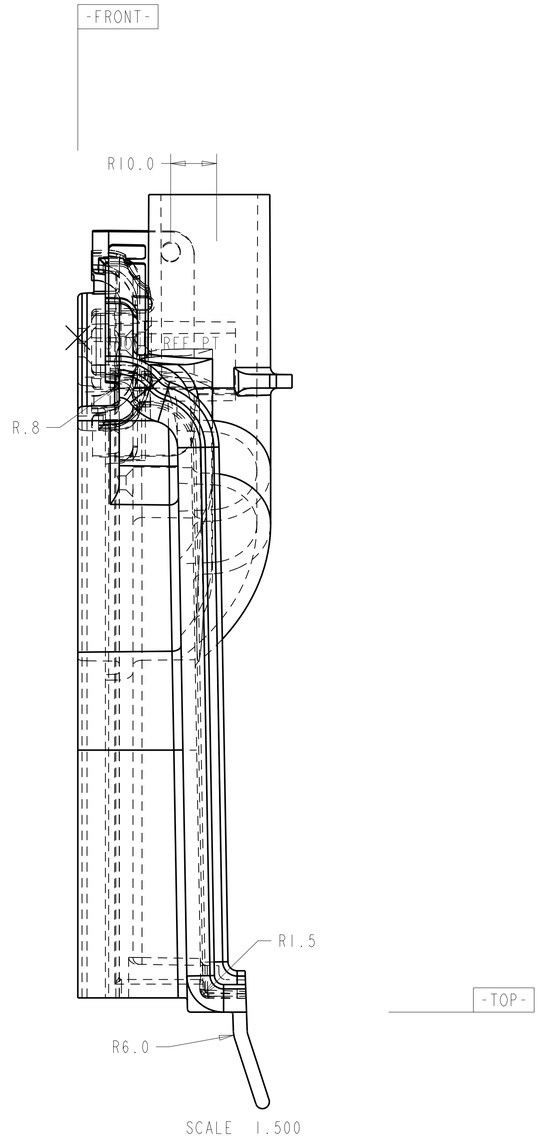

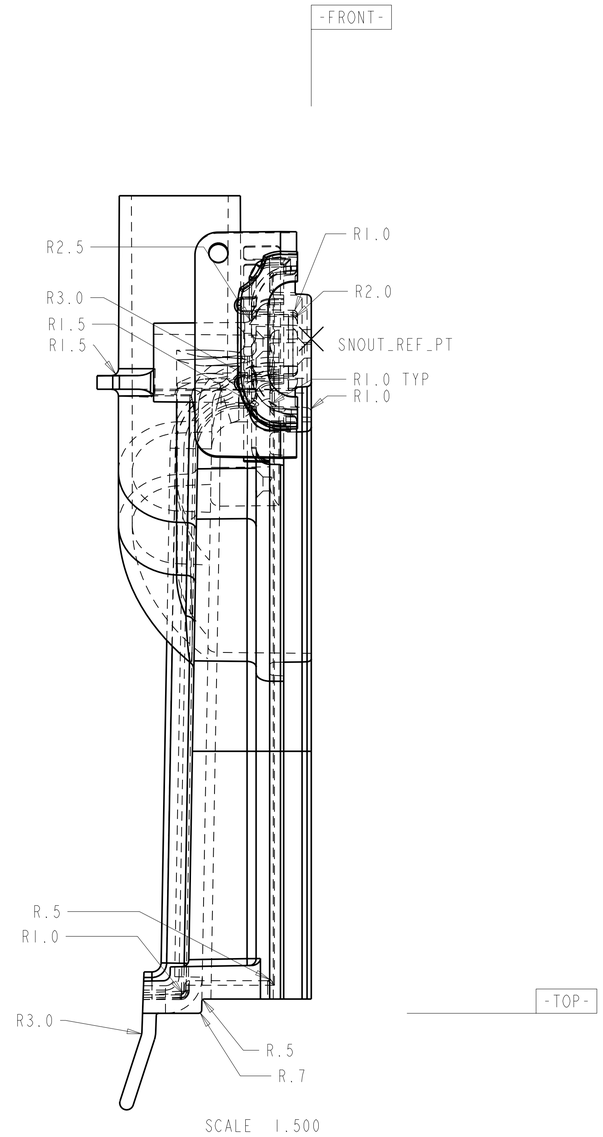

TOLERANCES		ORIGINATOR		18-Feb-11
.X	±0.1	DRAWN BY		18-Feb-11
.XX	±0.01	CHECKED		
.XXX	±0.001	APPROVED		
ANGLES	±0.5	USED ON:		

NOvA Experiment (Fermilab E929)

University of Minnesota

	Model Type: PART	Model File Name: FD_4_SNOUT_FRONT	Drawing File Name: FD_4_SNOUT_FRONT	
	Scale 1.000:1	Drawing Number	Revision	Sheet 6 of 6
Finish	All dimensions are in mm unless specified otherwise			