REV	DESCRIPTION	DATE

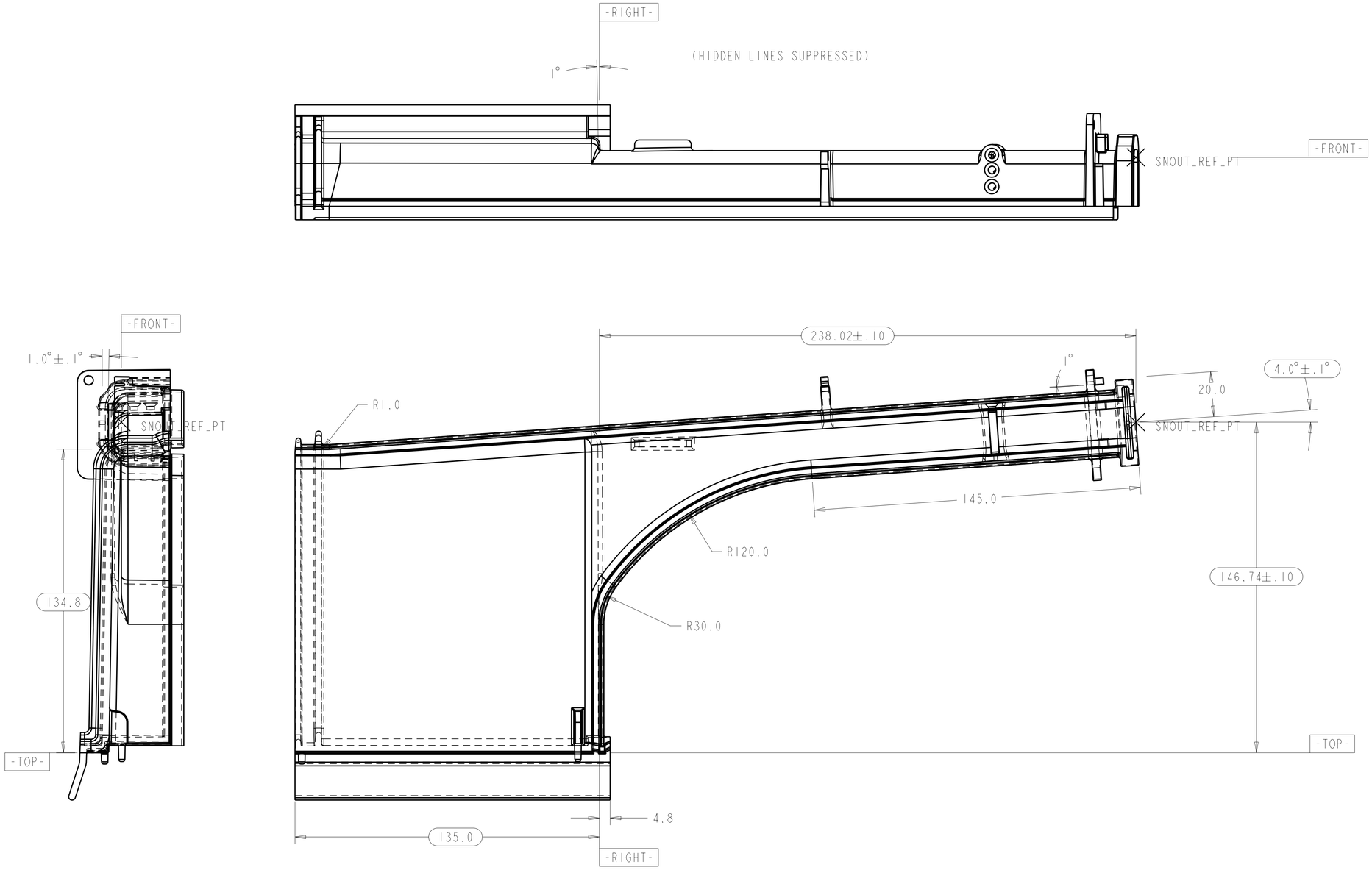

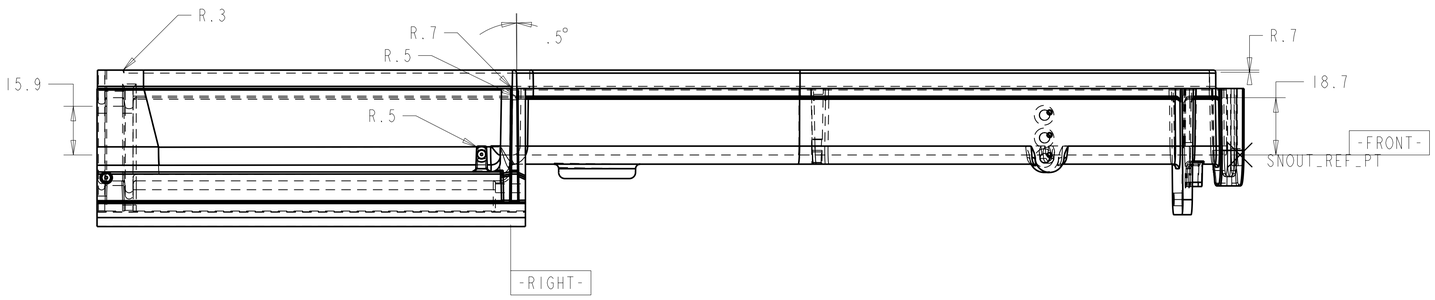

NOTES	
1	MATERIAL: TYPE I RIGID PVC, GEON M3500 OR M3800, BLACK
2	DO NOT USE MOLD RELEASE
3	MATERIAL REGRIND NOT TO EXCEED SUPPLIER RECOMMENDATIONS
4	PART VOLUME: 160 CC (10 IN^3)
5	QUANTITIES: 12,500 (14KT DETECTOR)

TOLERANCES		ORIGINATOR	T. Chase	24-Jan-10
.X	±0.1	DRAWN BY	T. Chase	24-Jan-10
.XX	±0.01	CHECKED		
.XXX	±0.001	APPROVED		
ANGLES	±0.5	USED ON: Near Detector Modules		

NOvA Experiment (Fermilab E929)

University of Minnesota

Near Detector Snout, Back

Model Type:	Model File Name:	Drawing File Name:	
PART	FD_4_SNOUT_BACK	FD_4_SNOUT_BACK	
Scale	Drawing Number	Revision	Sheet
1.000:1			1 of 6

Finish — All dimensions are in mm unless specified otherwise

REV	DESCRIPTION	DATE

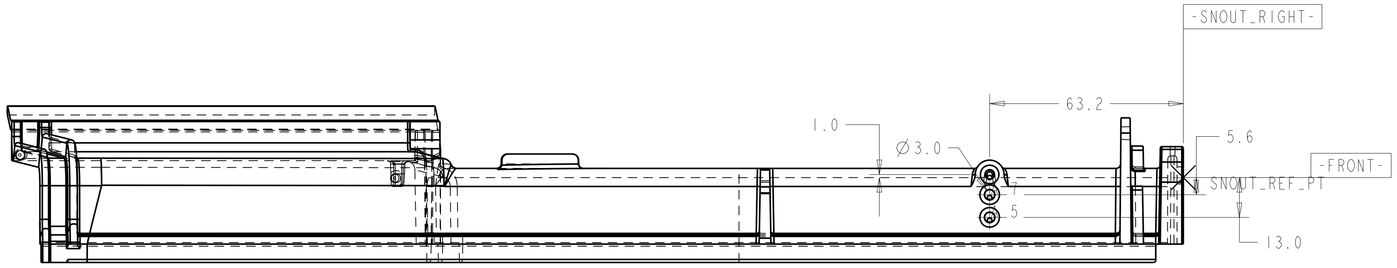

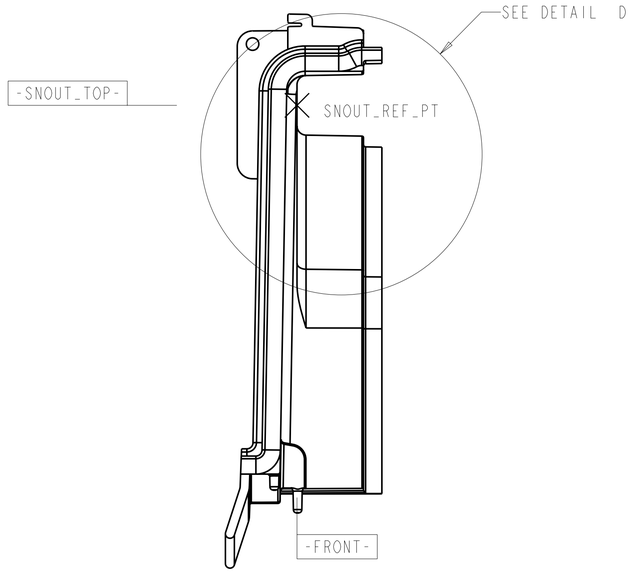

(HIDDEN LINES SUPPRESSED)

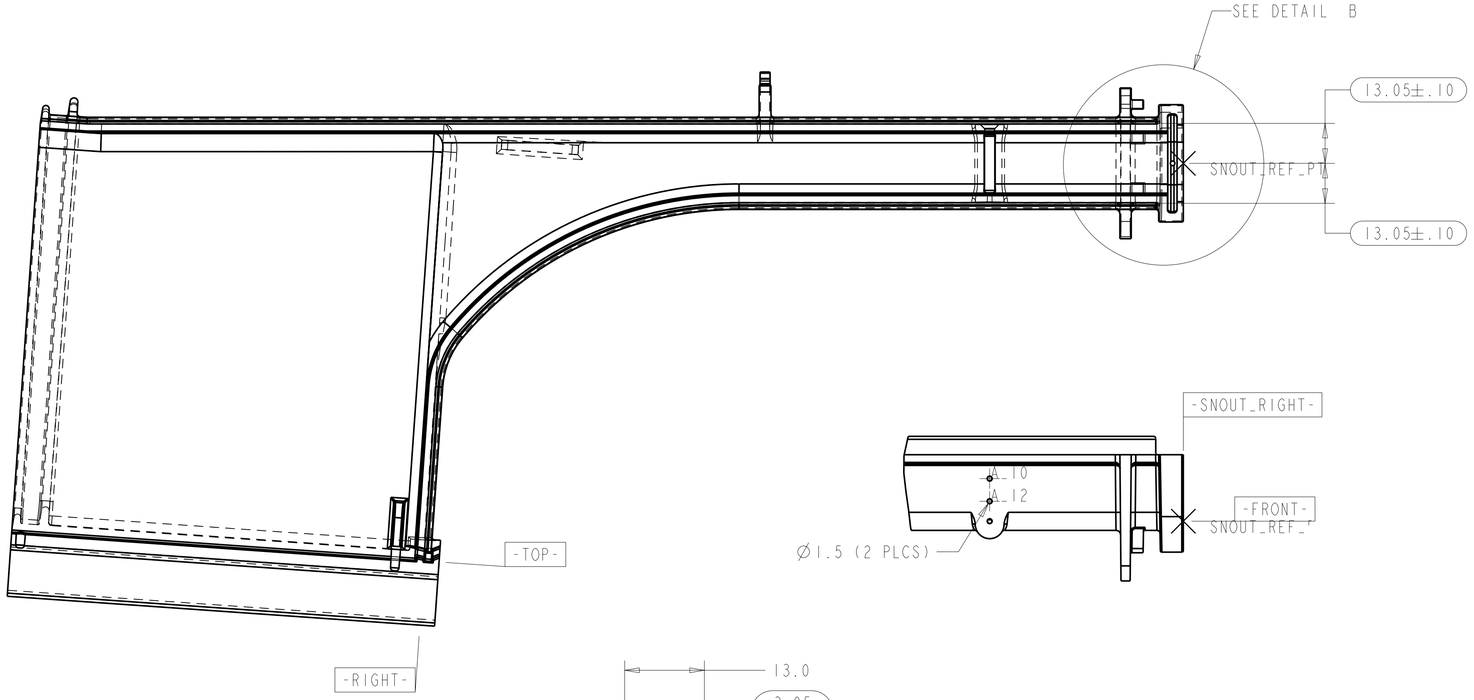

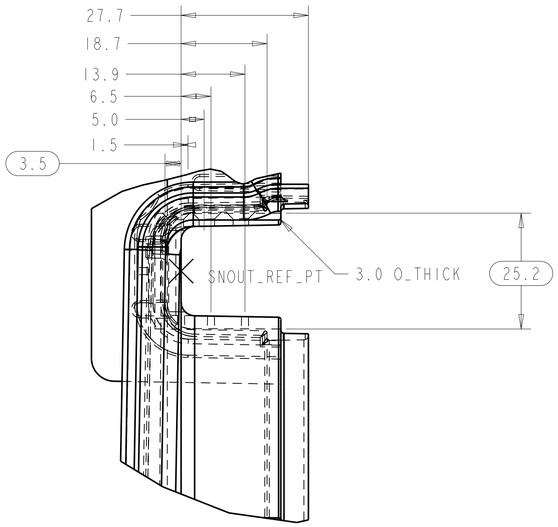

DETAIL D
SCALE 1.500

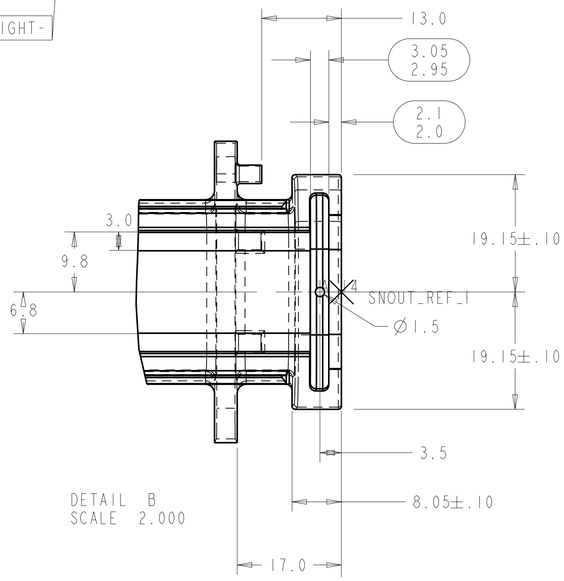

DETAIL B
SCALE 2.000

TOLERANCES		ORIGINATOR	T. Chase	24-Jan-10
.X	±0.1	DRAWN BY	T. Chase	24-Jan-10
.XX	±0.01	CHECKED		
.XXX	±0.001	APPROVED		
ANGLES	±0.5	USED ON: Near Detector Modules		

NOvA Experiment (Fermilab E929)

University of Minnesota

Near Detector Snout, Back

	Model Type: PART	Model File Name: FD_4_SNOUT_BACK	Drawing File Name: FD_4_SNOUT_BACK	
	Scale 1.000:1	Drawing Number	Revision	Sheet 2 of 6
Finish	All dimensions are in mm unless specified otherwise			

REV	DESCRIPTION	DATE

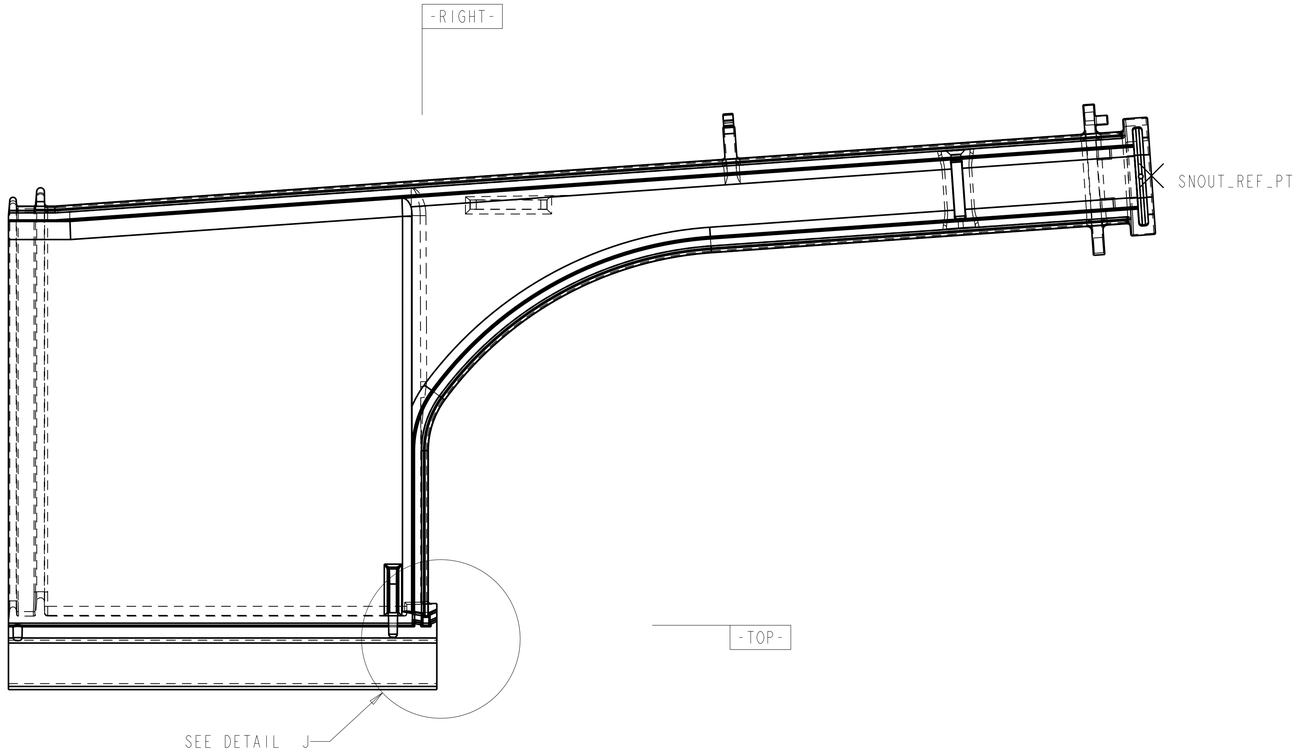

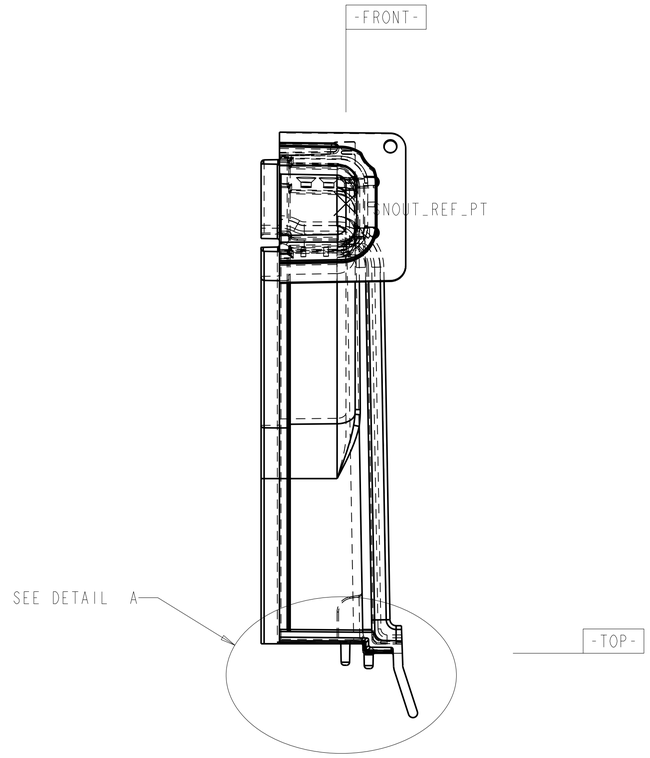

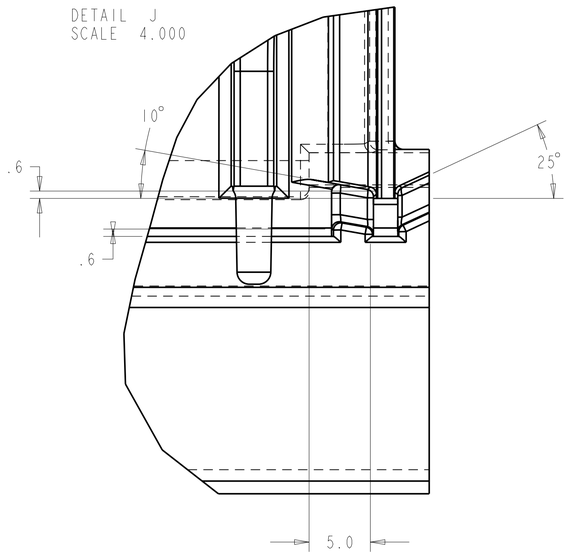

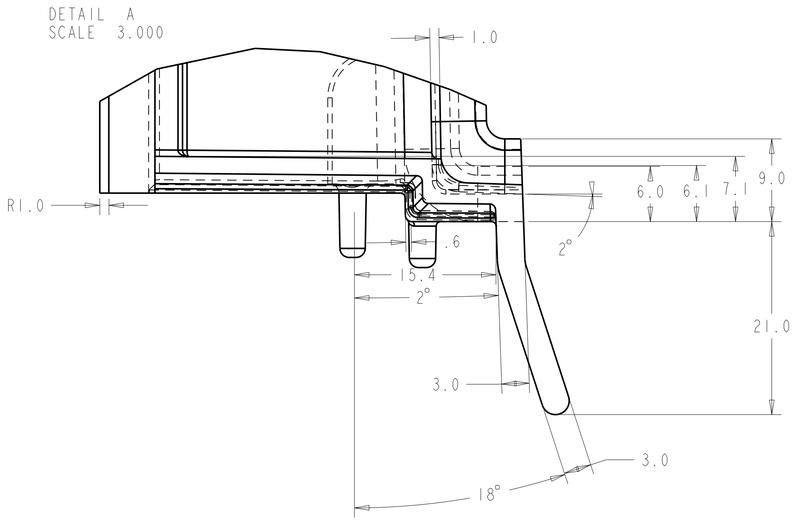

TOLERANCES		ORIGINATOR	T. Chase	26-Jan-10
.X	±0.1	DRAWN BY	T. Chase	26-Jan-10
.XX	±0.01	CHECKED		
.XXX	±0.001	APPROVED		
ANGLES	±0.5	USED ON: Near Detector Modules		

NOvA Experiment (Fermilab E929)

University of Minnesota

Near Detector Snout, Back

	Model Type: PART	Model File Name: FD_4_SNOUT_BACK	Drawing File Name: FD_4_SNOUT_BACK	
	Scale 1.000:1	Drawing Number	Revision	Sheet 3 of 6
Finish	All dimensions are in mm unless specified otherwise			

REV	DESCRIPTION	DATE

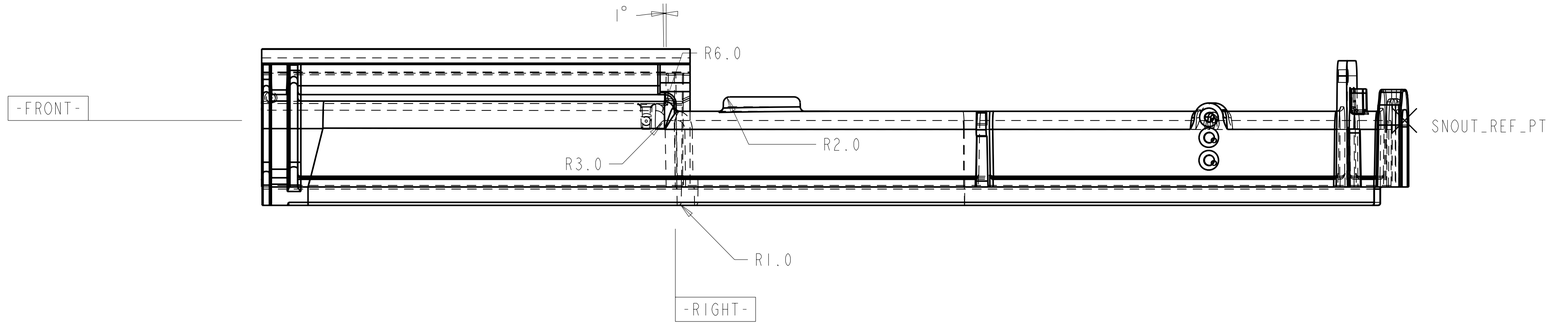

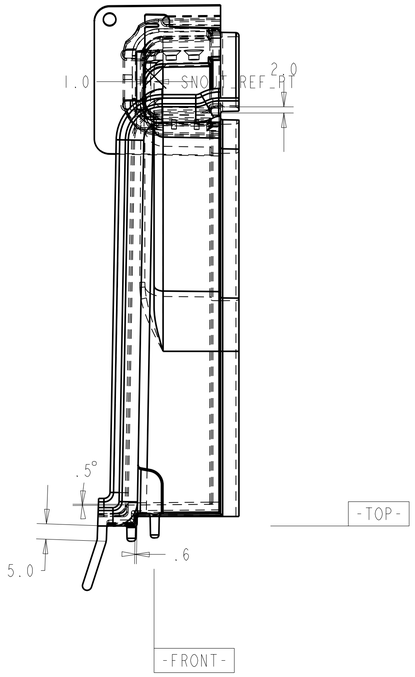

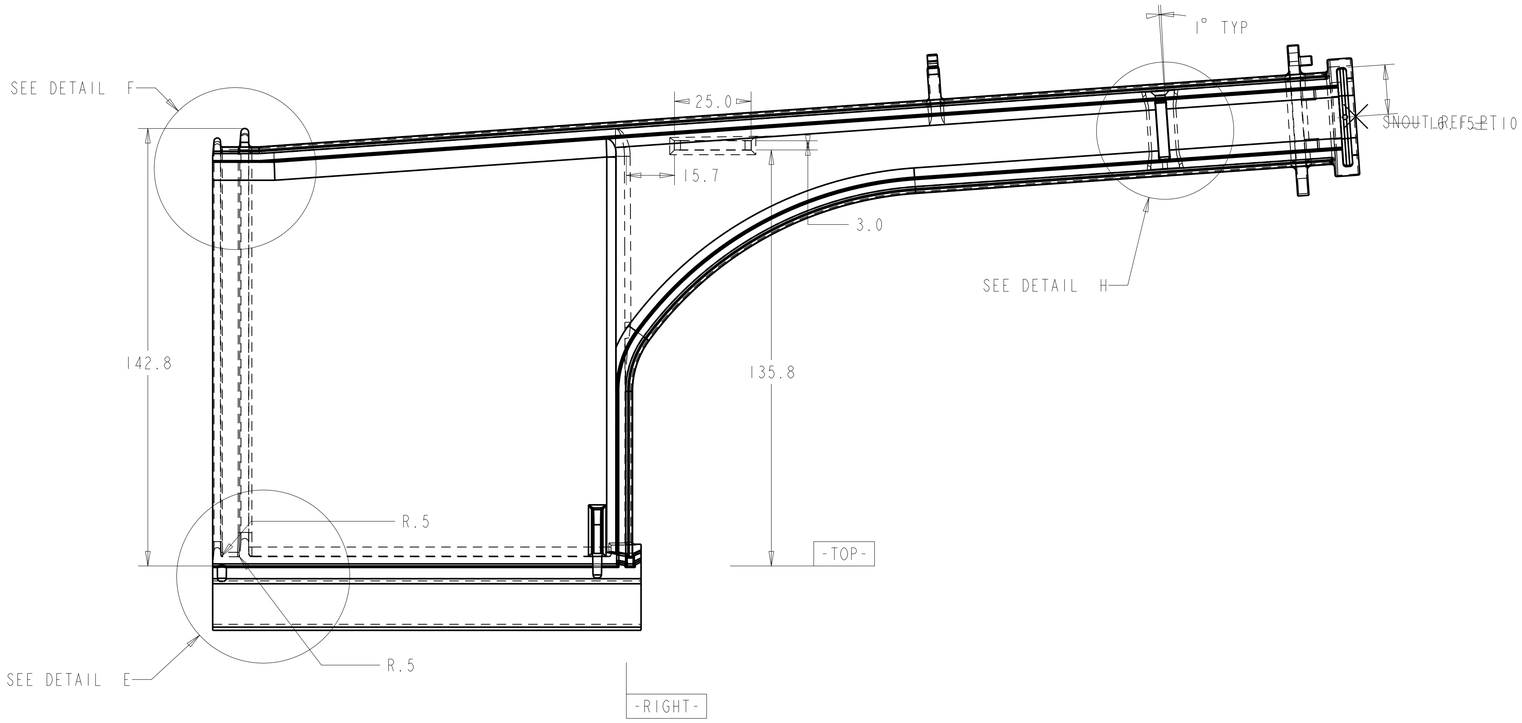

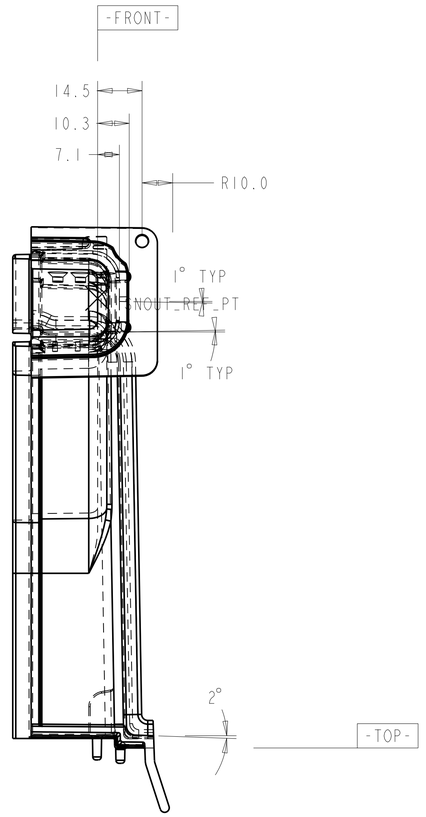

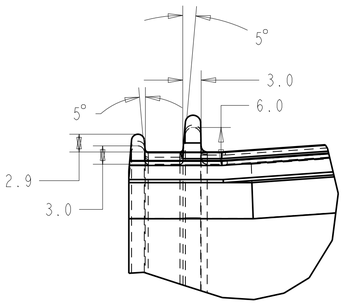

DETAIL F
SCALE 2.000

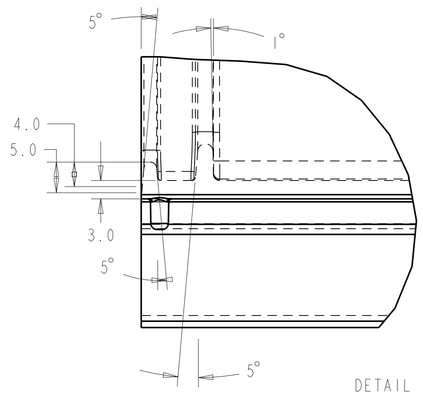

DETAIL E
SCALE 2.000

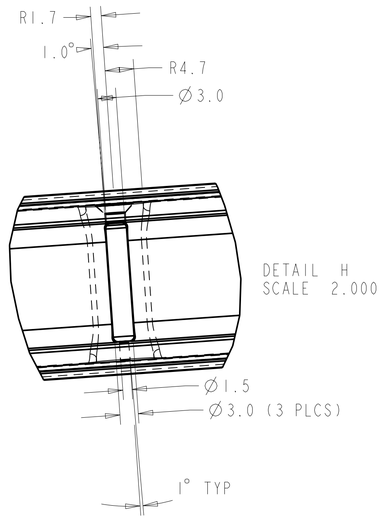

DETAIL H
SCALE 2.000

TOLERANCES		ORIGINATOR	T. Chase	29-Jan-10
.X	±0.1	DRAWN BY	T. Chase	29-Jan-10
.XX	±0.01	CHECKED		
.XXX	±0.001	APPROVED		
ANGLES	±0.5	USED ON: Near Detector Modules		

NOvA Experiment (Fermilab E929)

University of Minnesota

Near Detector Snout, Back

	Model Type: PART	Model File Name: FD_4_SNOUT_BACK	Drawing File Name: FD_4_SNOUT_BACK	
	Scale 1.000:1	Drawing Number	Revision	Sheet 4 of 6
Finish	All dimensions are in mm unless specified otherwise			

REV	DESCRIPTION	DATE

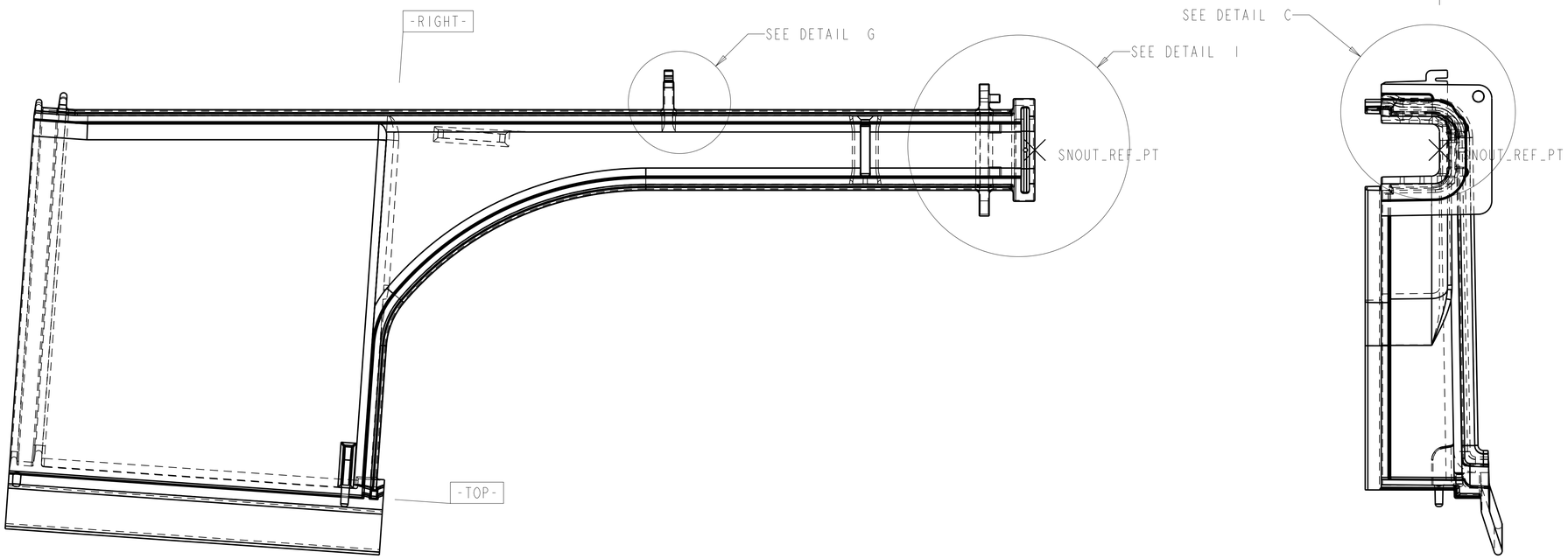

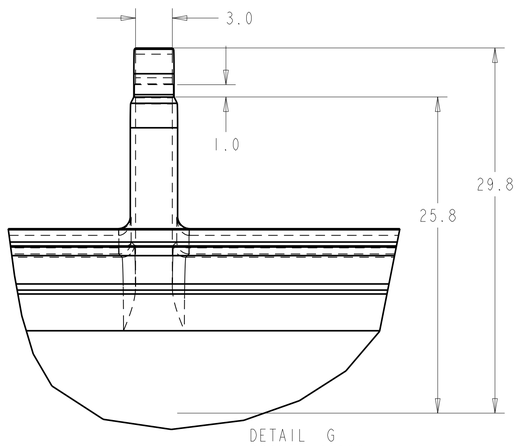

DETAIL G
SCALE 4.000

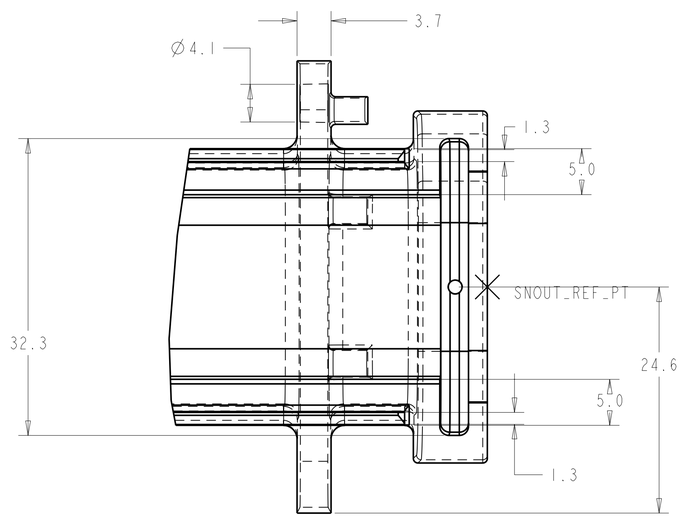

DETAIL I
SCALE 3.000

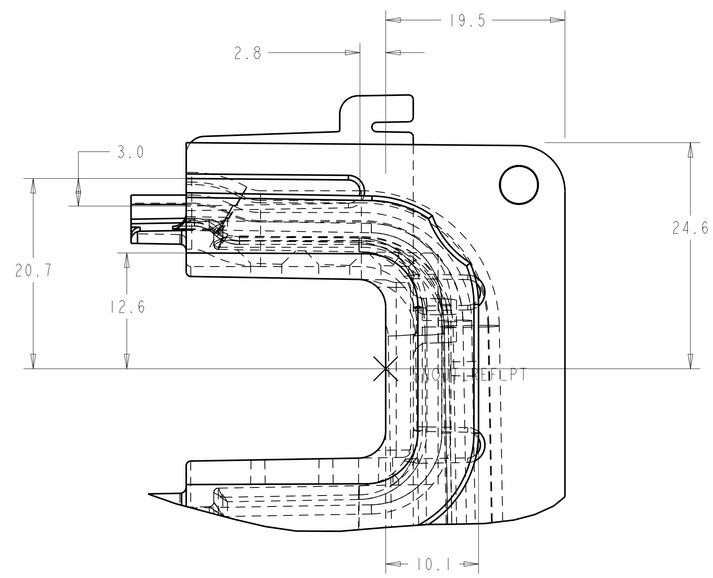

DETAIL C
SCALE 3.000

TOLERANCES		ORIGINATOR	T. Chase	29-Jan-10
.X	±0.1	DRAWN BY	T. Chase	29-Jan-10
.XX	±0.01	CHECKED		
.XXX	±0.001	APPROVED		
ANGLES	±0.5	USED ON: Near Detector Modules		

NOvA Experiment (Fermilab E929)

University of Minnesota

Near Detector Snout, Back

	Model Type: PART	Model File Name: FD_4_SNOUT_BACK	Drawing File Name: FD_4_SNOUT_BACK	
	Scale 1.000:1	Drawing Number	Revision	Sheet 5 of 6
Finish	All dimensions are in mm unless specified otherwise			

REV	DESCRIPTION	DATE

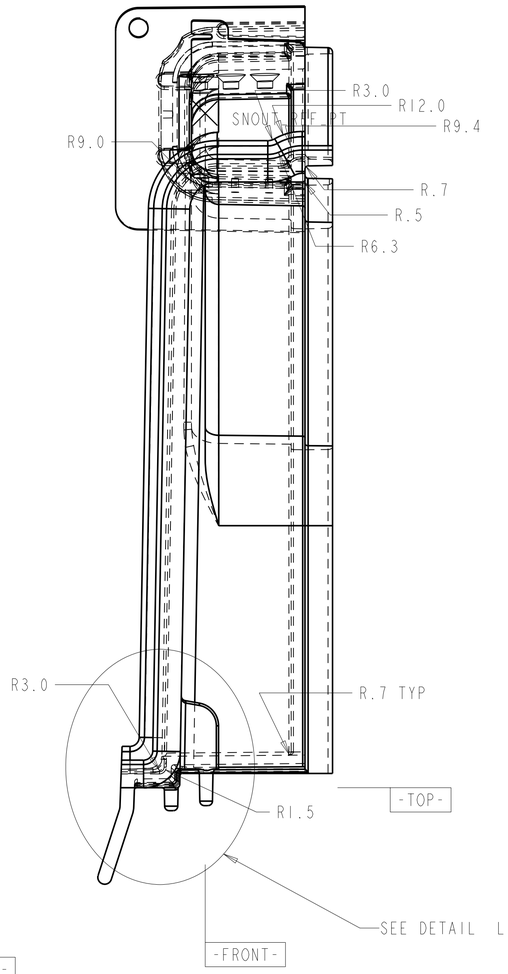

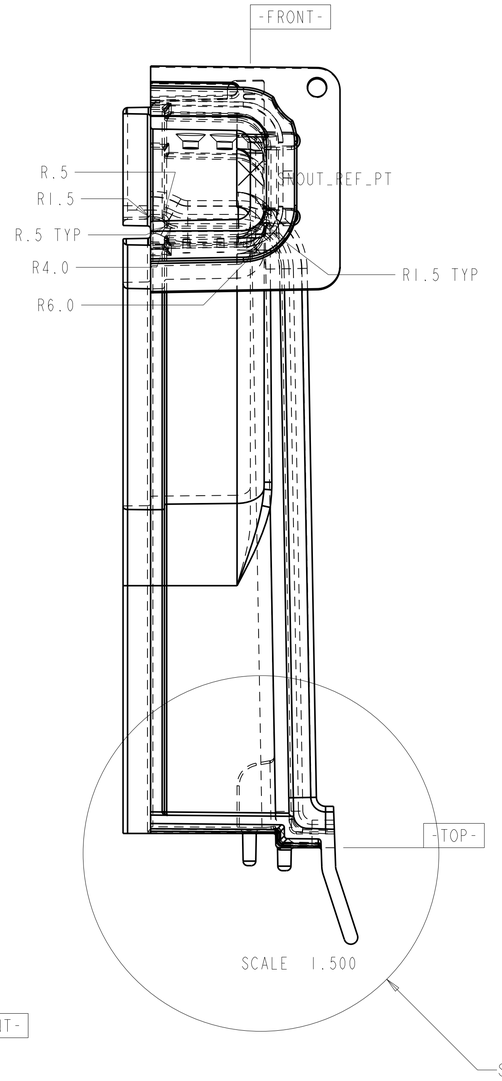

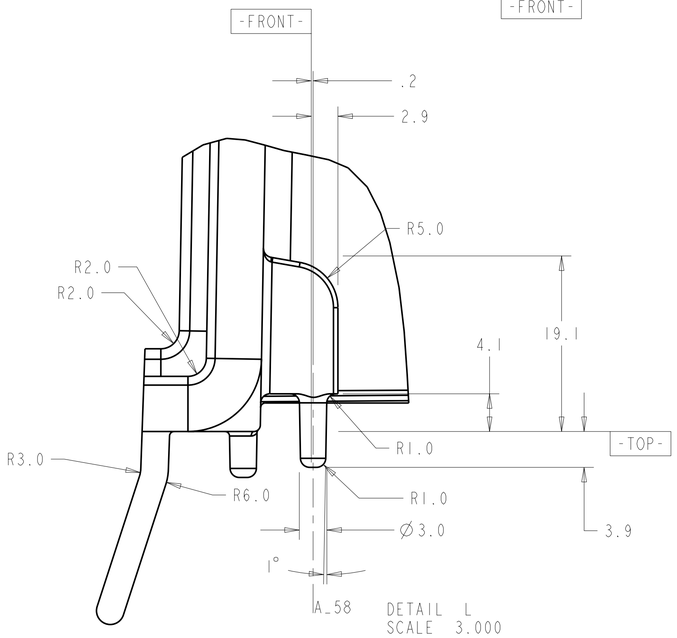

DETAIL L
SCALE 3.000
(HIDDEN LINES SUPPRESSED)

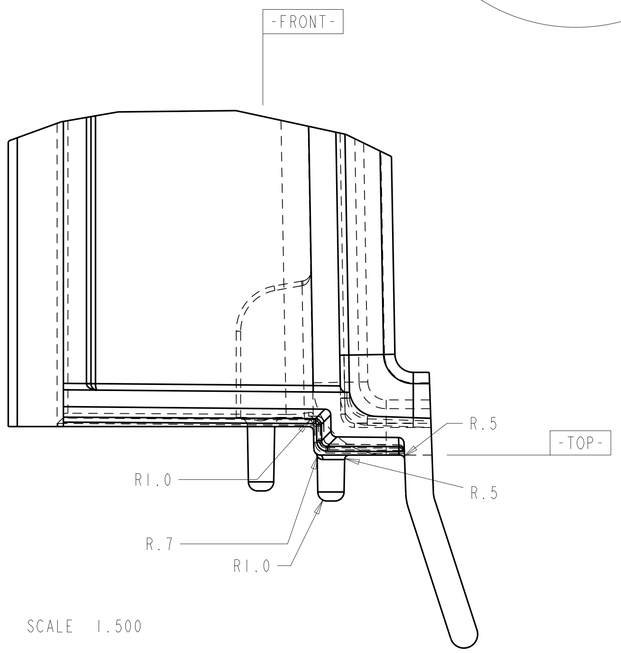

SCALE 1.500

DETAIL K
SCALE 3.000

TOLERANCES		ORIGINATOR		19-Feb-11
.X	±0.1	DRAWN BY		19-Feb-11
.XX	±0.01	CHECKED		
.XXX	±0.001	APPROVED		
ANGLES	±0.5	USED ON:		

NOvA Experiment (Fermilab E929)

University of Minnesota

	Model Type: PART	Model File Name: FD_4_SNOUT_BACK	Drawing File Name: FD_4_SNOUT_BACK	
	Scale 1.000:1	Drawing Number	Revision	Sheet 6 of 6
Finish	All dimensions are in mm unless specified otherwise			