REV	DESCRIPTION	DATE

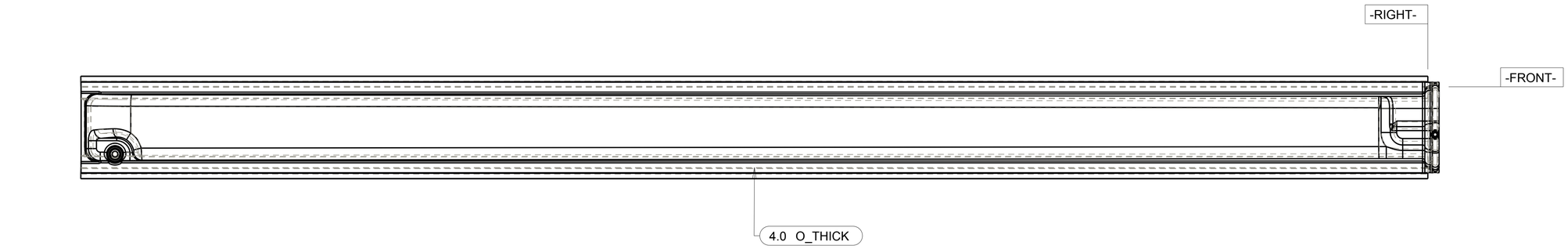

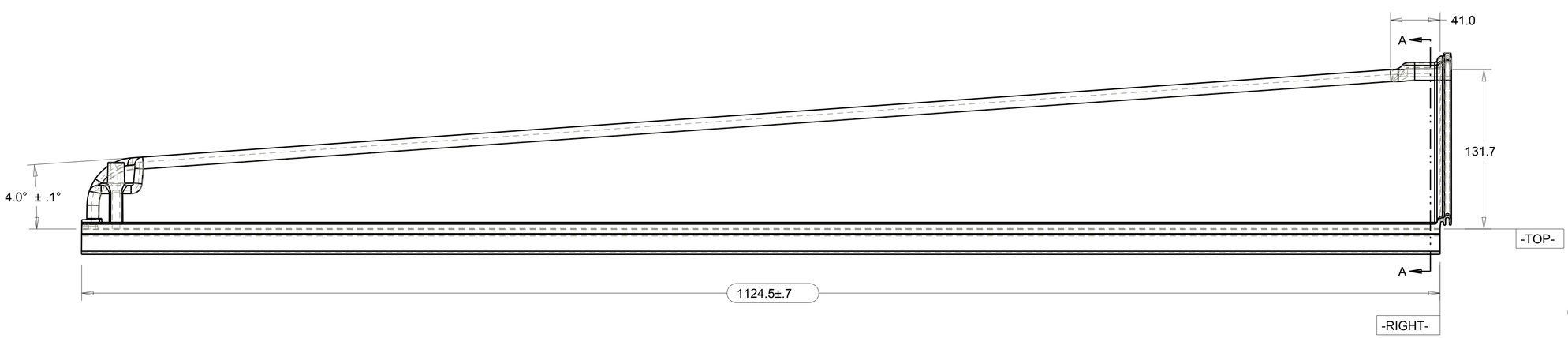

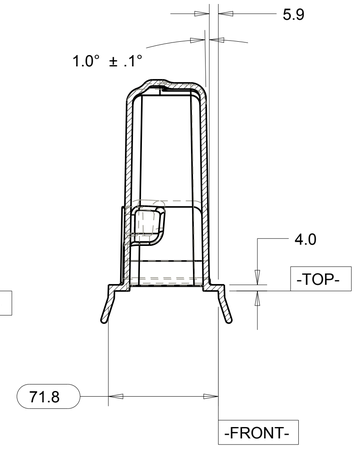

SECTION A-A

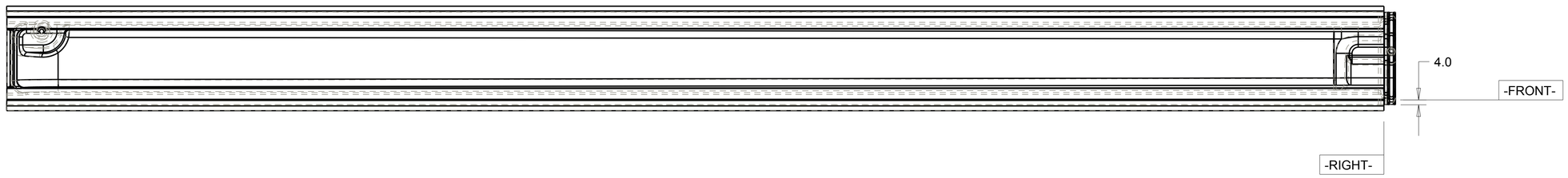

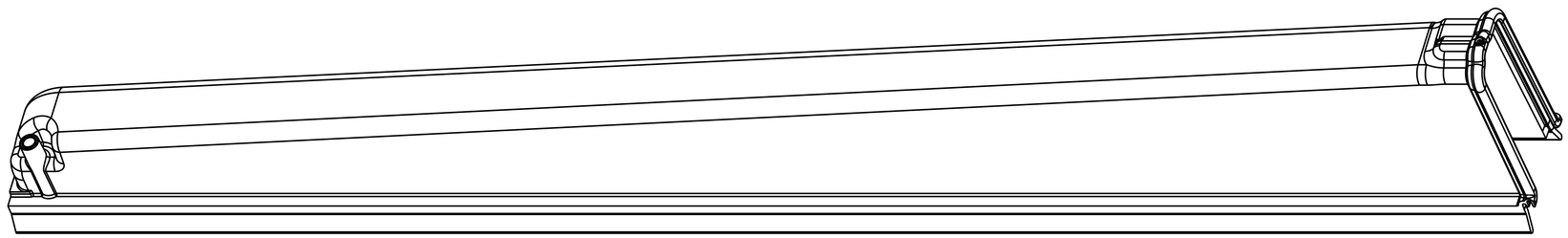

NOTES	
1	MATERIAL: TYPE I RIGID PVC, GEON M3500 OR M3800, BLACK
2	DO NOT USE MOLD RELEASE
3	HOT RUNNER MOLD REQUIRED
4	MATERIAL REGRIND NOT TO EXCEED SUPPLIER RECOMMENDATIONS
5	PART VOLUME: 1334 CC (81.4 IN^3)
6	QUANTITY: 12,500 (14 KT DETECTOR)

TOLERANCES		ORIGINATOR	N. ARNESON	17-Feb-11
.X	± 0.1	DRAWN BY	N. ARNESON & T. CHASE	17-Feb-11
.XX	± 0.01	CHECKED		
.XXX	± 0.001	APPROVED		
ANGLES	± 0.5	USED ON:		

NOvA Experiment (Fermilab E929)

University of Minnesota

Manifold_Cover

Finish	Model Type: PART	Model File Name: FD_4_MANIF_COV_REV	Drawing File Name: FD_4_MANIF_COV_REV	
	Scale 0.500 :1	Drawing Number 1	Revision	Sheet 1 of 9
	All dimensions are in mm unless specified otherwise			

REV	DESCRIPTION	DATE

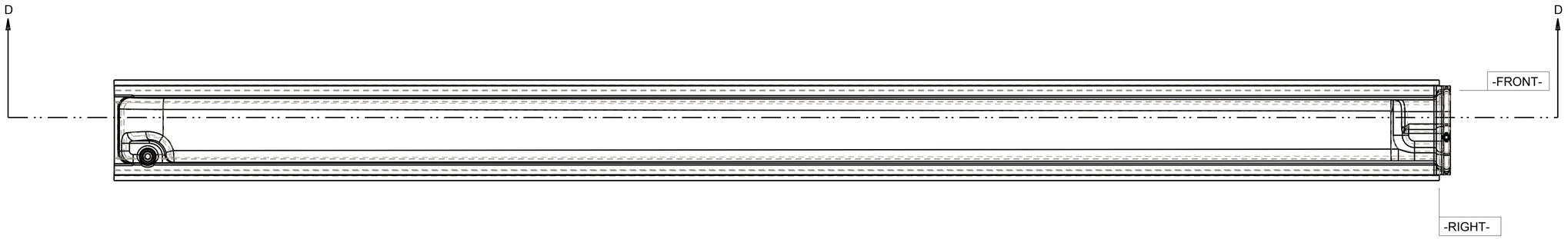

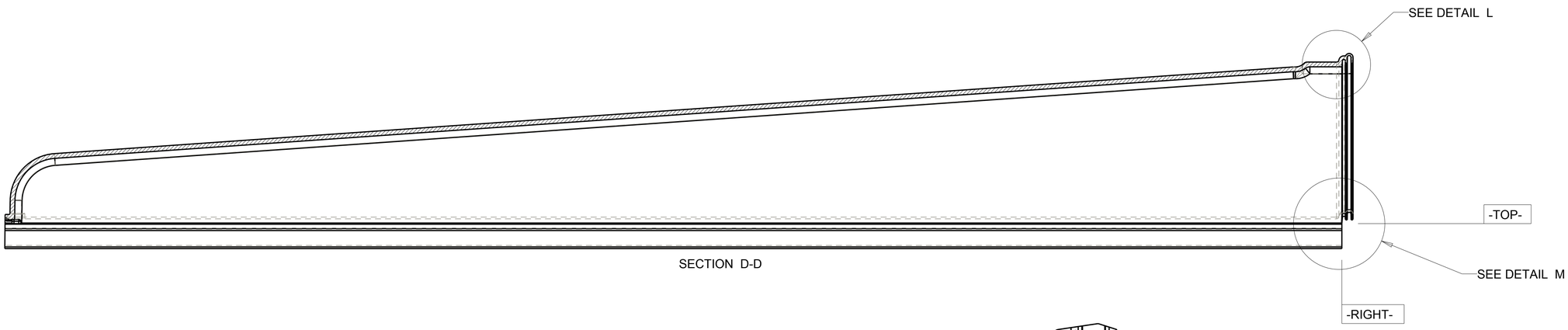

SECTION D-D

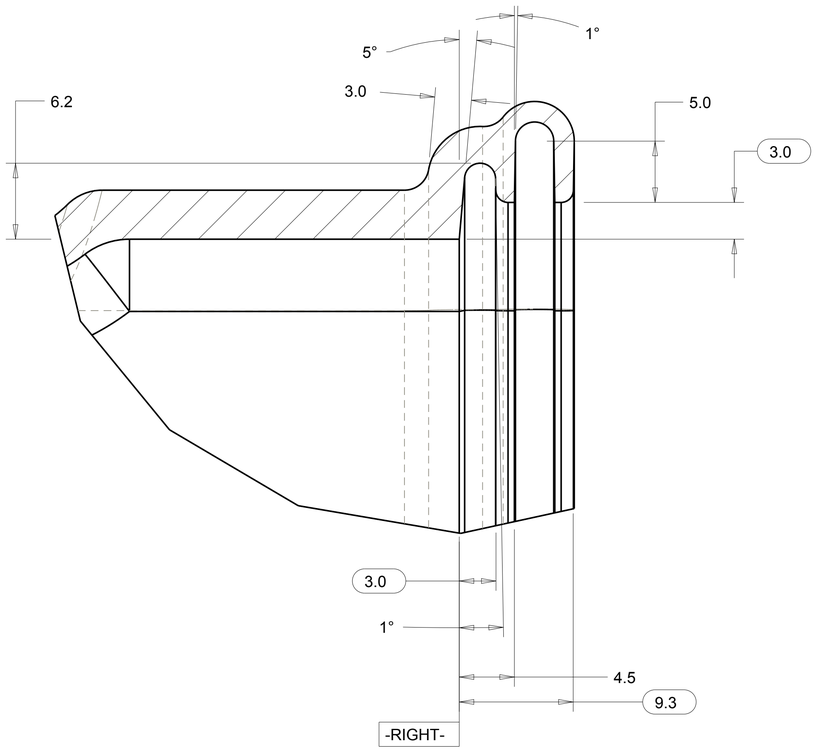

DETAIL L
SCALE 4.000

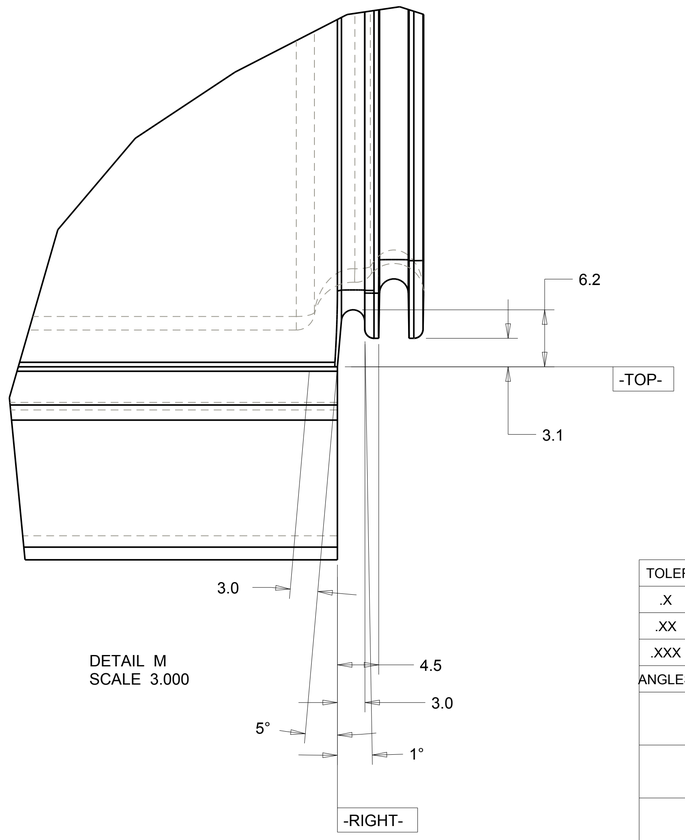

DETAIL M
SCALE 3.000

TOLERANCES		ORIGINATOR	Nick Arneson	18-Feb-11
.X	± 0.1	DRAWN BY	Nick Arneson	18-Feb-11
.XX	± 0.01	CHECKED		
.XXX	± 0.001	APPROVED		
ANGLES	± 0.5	USED ON:		

NOvA Experiment (Fermilab E929)

University of Minnesota

Manifold_Cover

Finish	Model Type: PART	Model File Name: FD_4_MANIF_COV_REV	Drawing File Name: FD_4_MANIF_COV_REV	
	Scale 0.500 :1	Drawing Number	Revision	Sheet 2 of 9
	All dimensions are in mm unless specified otherwise			

REV	DESCRIPTION	DATE

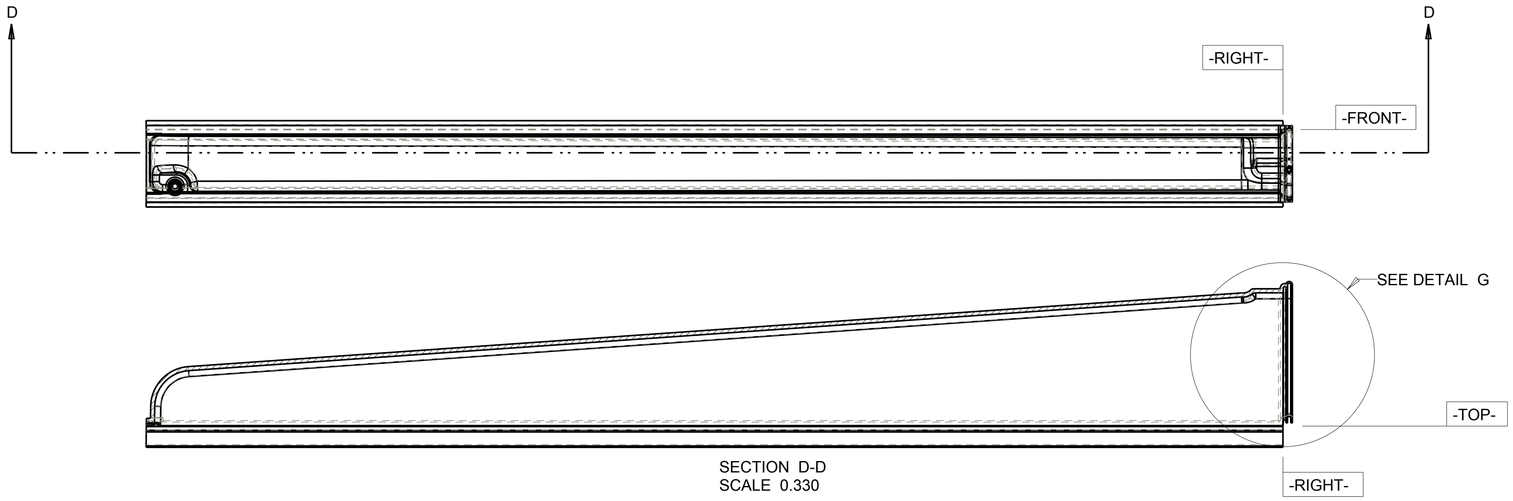

SECTION D-D
SCALE 0.330

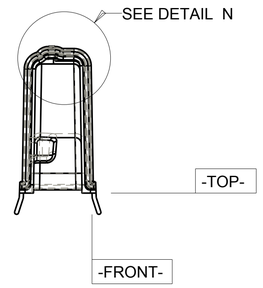

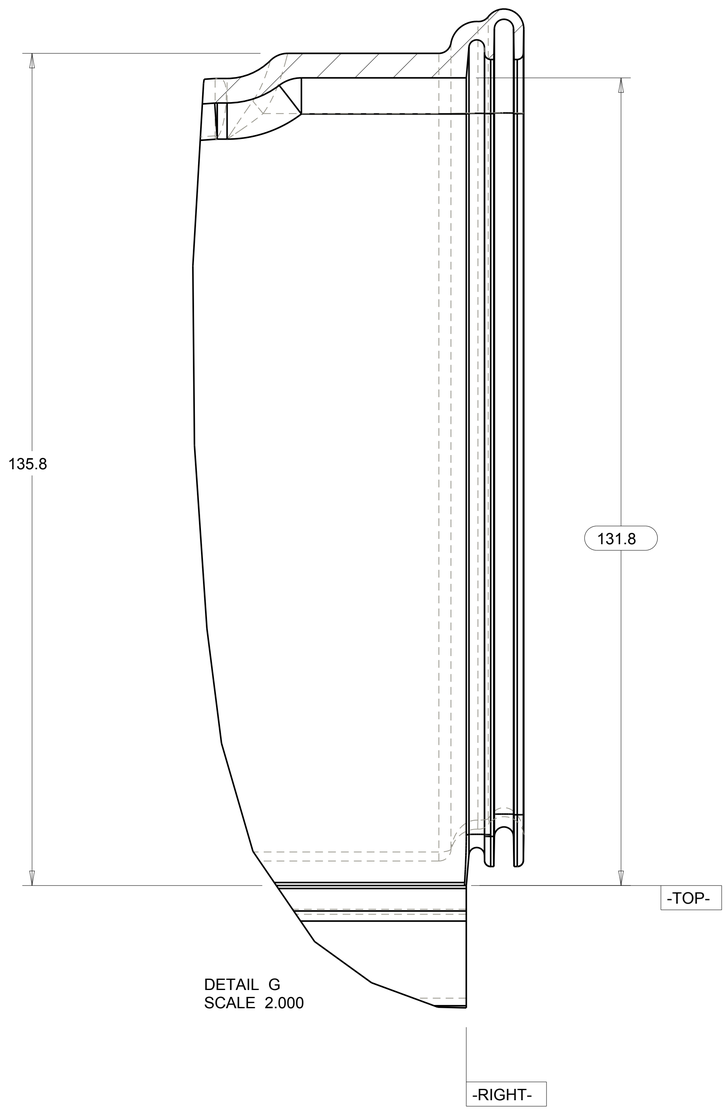

DETAIL G
SCALE 2.000

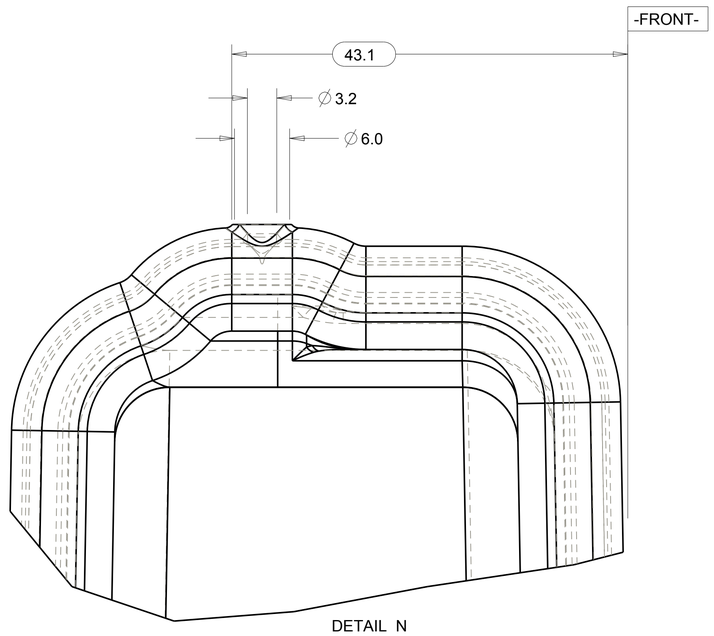

DETAIL N
SCALE 3.000

TOLERANCES		ORIGINATOR	N. ARNESON	17-Feb-11
.X	± 0.1	DRAWN BY	N. ARNESON & T. CHASE	17-Feb-11
.XX	± 0.01	CHECKED		
.XXX	± 0.001	APPROVED		
ANGLES	± 0.5	USED ON:		

NOvA Experiment (Fermilab E929)

University of Minnesota

Manifold_Cover

	Model Type:	Model File Name:	Drawing File Name:	
	PART	FD_4_MANIF_COV_REV	FD_4_MANIF_COV_REV	
	Scale	Drawing Number	Revision	Sheet
	0.500 :1			3 of 9
Finish	All dimensions are in mm unless specified otherwise			

REV	DESCRIPTION	DATE

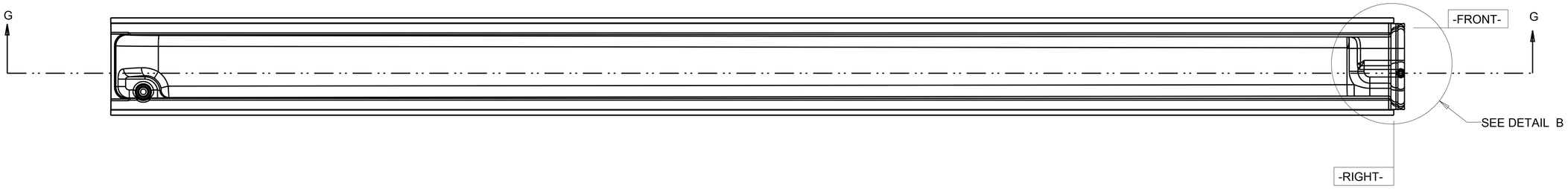

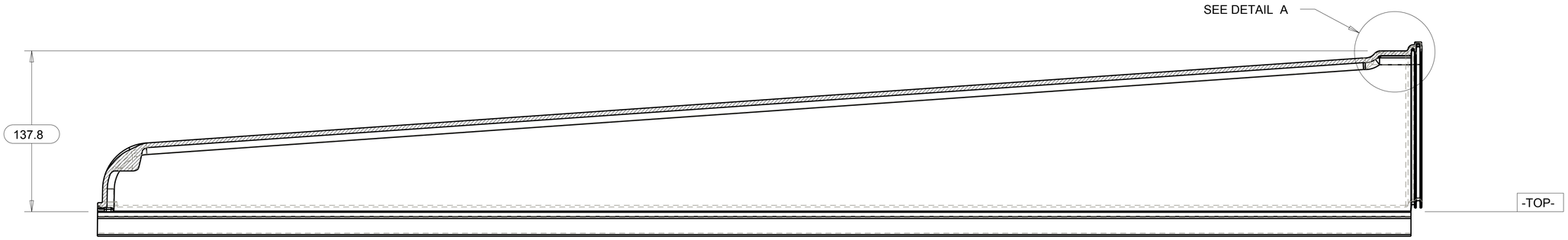

SECTION G-G

-RIGHT-

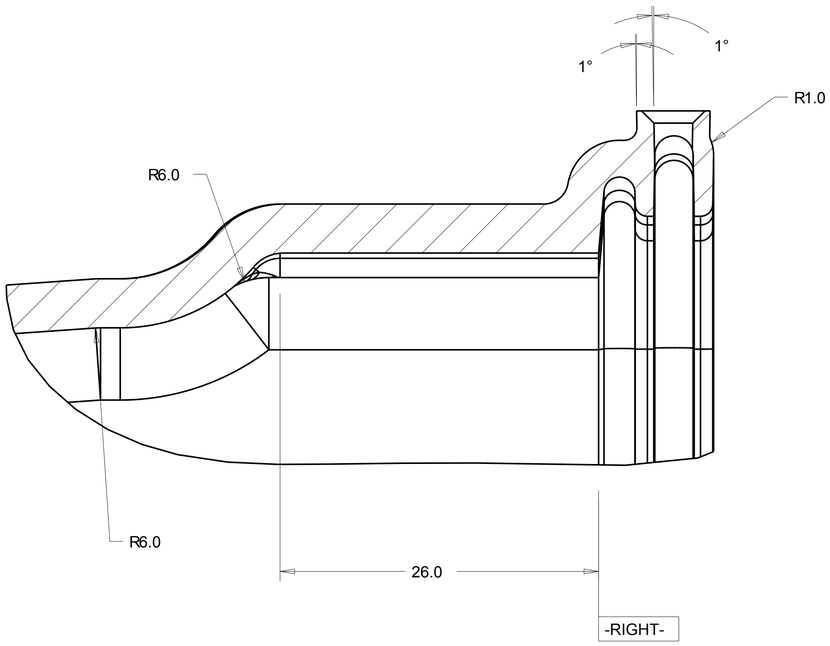

DETAIL A
SCALE 4.000

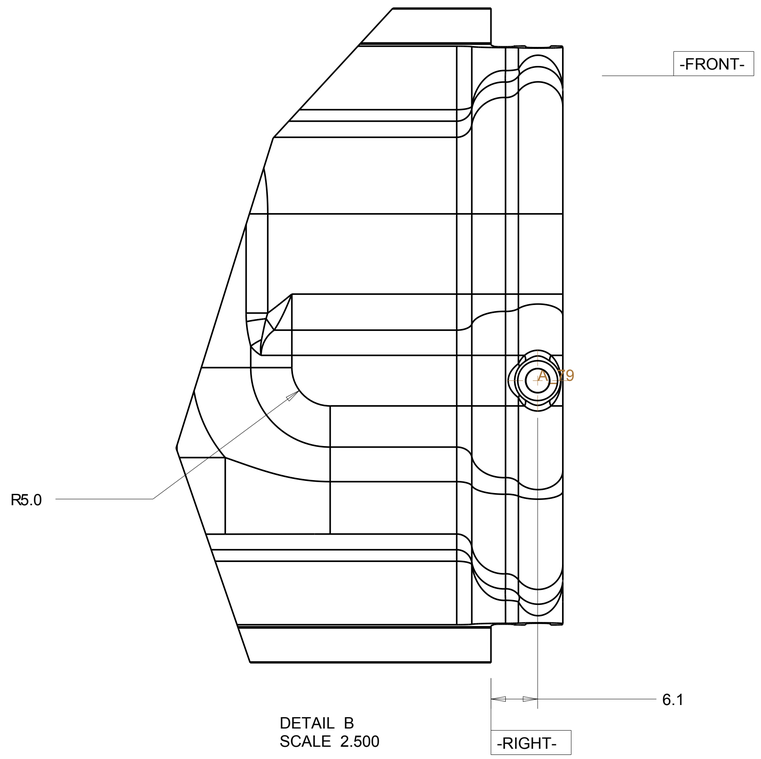

DETAIL B
SCALE 2.500

TOLERANCES		ORIGINATOR	N. ARNESON	17-Feb-11
.X	± 0.1	DRAWN BY	N. ARNESON & T. CHASE	17-Feb-11
.XX	± 0.01	CHECKED		
.XXX	± 0.001	APPROVED		
ANGLES	± 0.5	USED ON:		

NOvA Experiment (Fermilab E929)

University of Minnesota

Manifold_Cover

	Model Type:	Model File Name:	Drawing File Name:	
	PART	FD_4_MANIF_COV_REV	FD_4_MANIF_COV_REV	
	Scale	Drawing Number	Revision	Sheet
	0.500 :1			4 of 9
Finish	All dimensions are in mm unless specified otherwise			

REV	DESCRIPTION	DATE

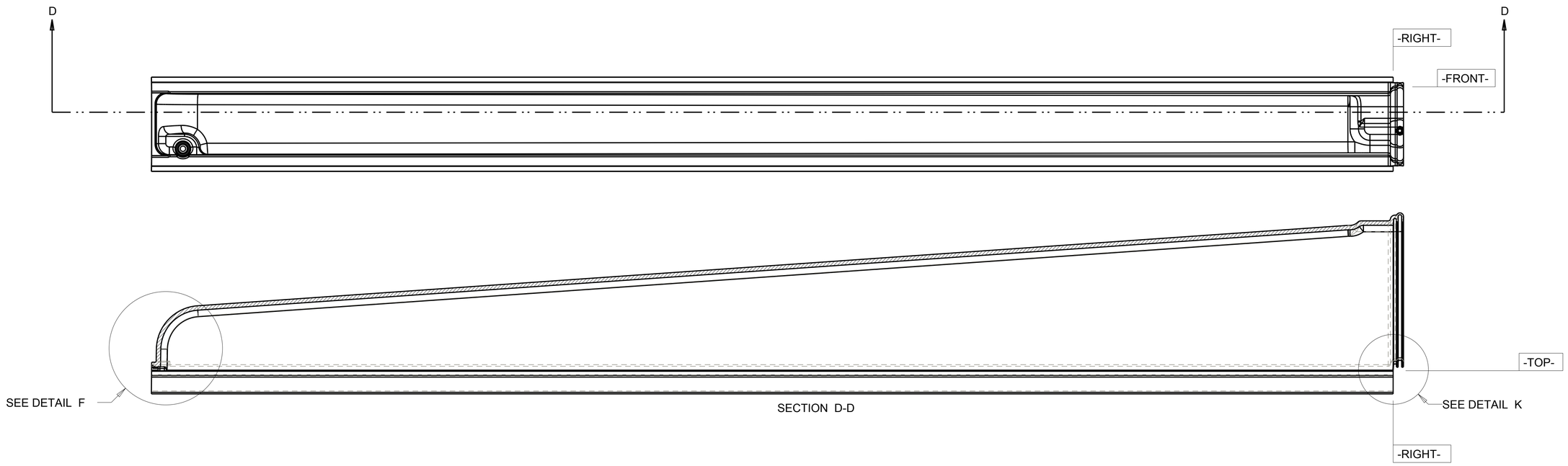

SECTION D-D

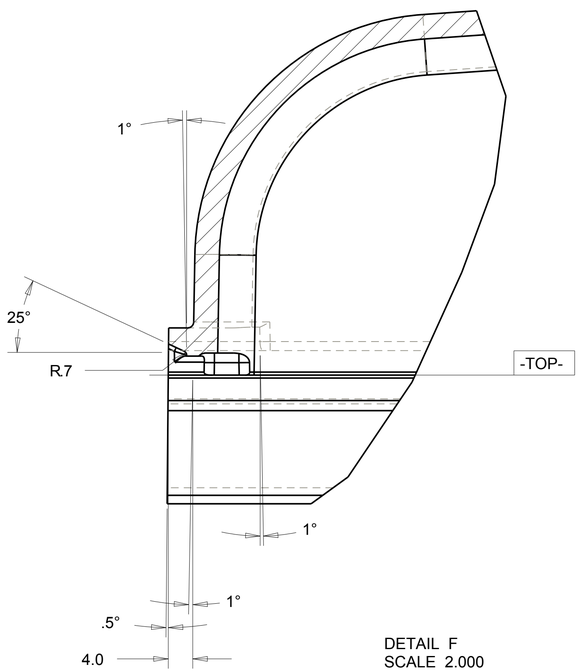

DETAIL F
SCALE 2.000

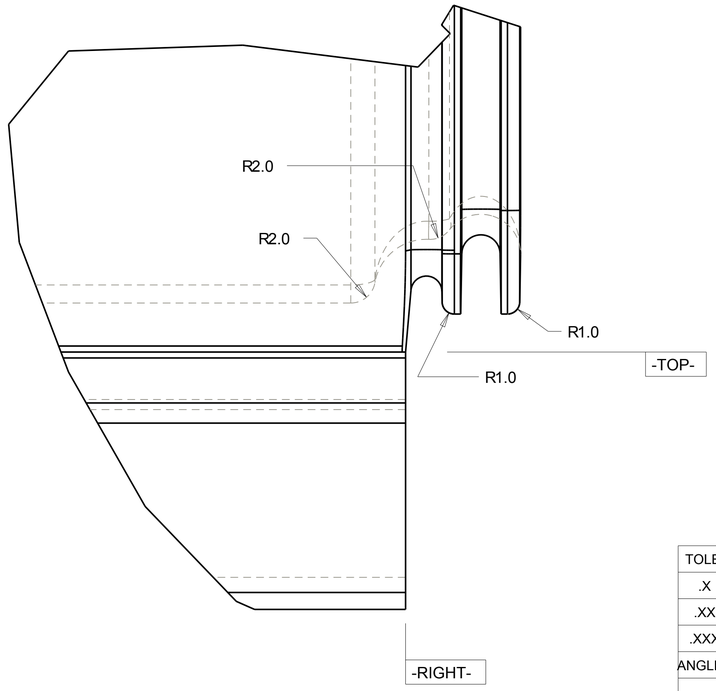

DETAIL K
SCALE 4.000

TOLERANCES		ORIGINATOR	Nick Arneson	17-Feb-11
.X	± 0.1	DRAWN BY	Nick Arneson	17-Feb-11
.XX	± 0.01	CHECKED		
.XXX	± 0.001	APPROVED		
ANGLES	± 0.5	USED ON:		

NOvA Experiment (Fermilab E929)

University of Minnesota

Manifold_Cover

Finish	Model Type: PART	Model File Name: FD_4_MANIF_COV_REV	Drawing File Name: FD_4_MANIF_COV_REV	
	Scale 0.500 :1	Drawing Number	Revision	Sheet 5 of 9
	All dimensions are in mm unless specified otherwise			

REV	DESCRIPTION	DATE

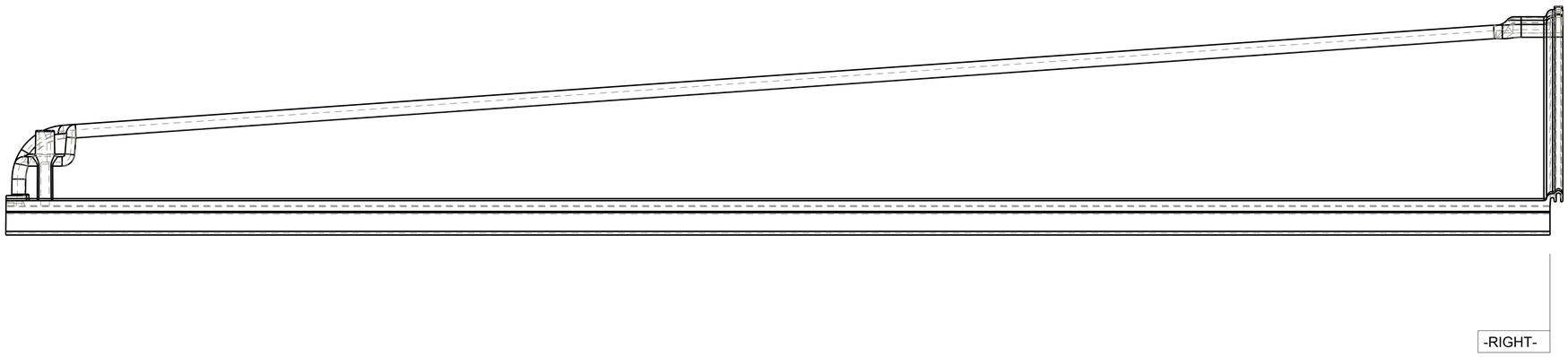

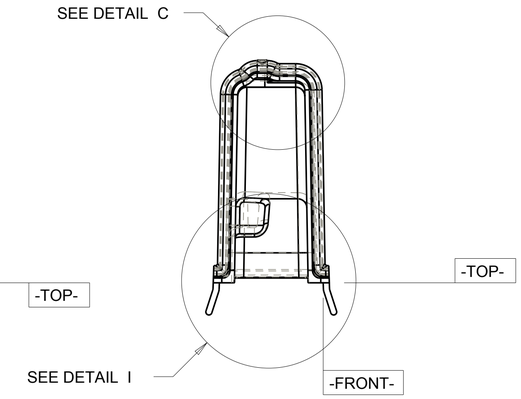

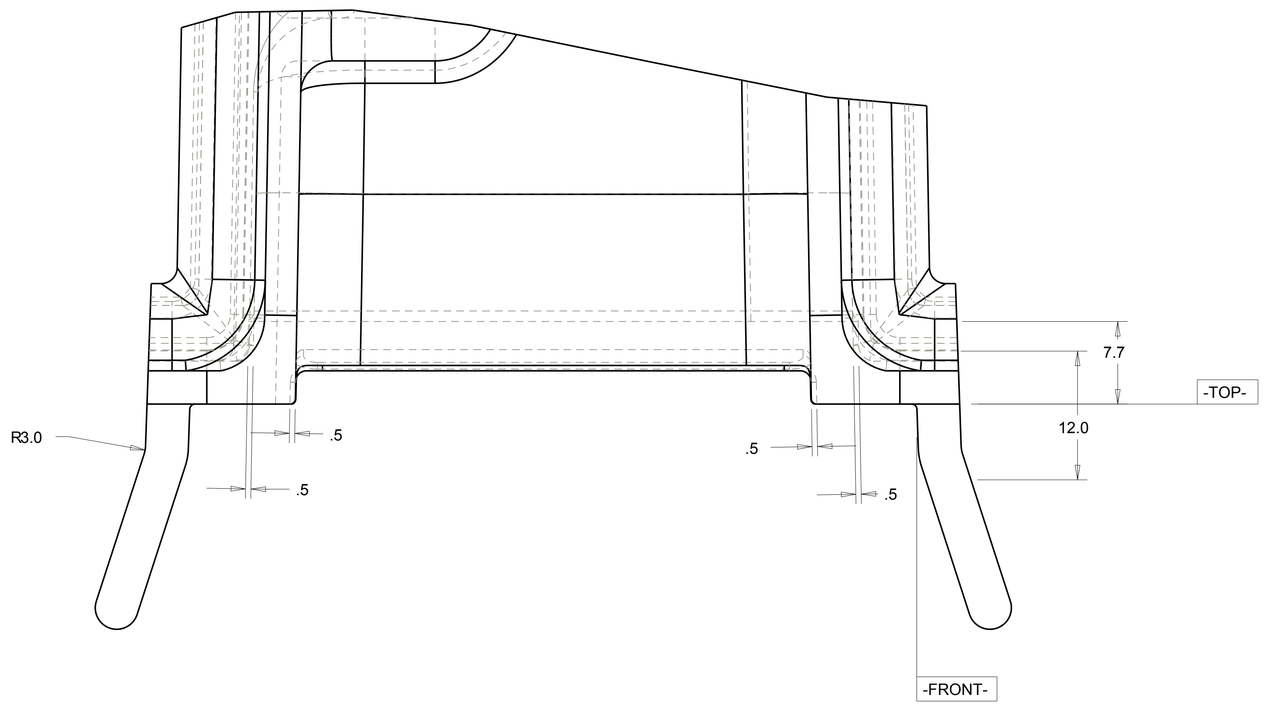

DETAIL I
SCALE 3.500

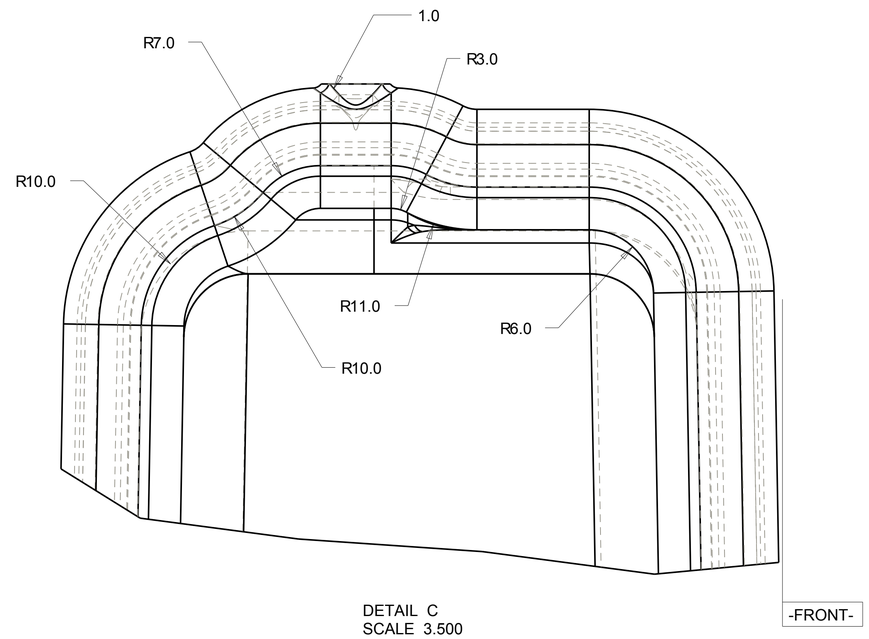

DETAIL C
SCALE 3.500

TOLERANCES		ORIGINATOR	Nick Arneson	17-Feb-11
.X	± 0.1	DRAWN BY	Nick Arneson	17-Feb-11
.XX	± 0.01	CHECKED		
.XXX	± 0.001	APPROVED		
ANGLES	± 0.5	USED ON:		

NOvA Experiment (Fermilab E929)

University of Minnesota

Manifold_Cover

	Model Type:	Model File Name:	Drawing File Name:	
	PART	FD_4_MANIF_COV_REV	FD_4_MANIF_COV_REV	
	Scale	Drawing Number	Revision	Sheet
Finish	0.500 :1			6 of 9
	All dimensions are in mm unless specified otherwise			

REV	DESCRIPTION	DATE

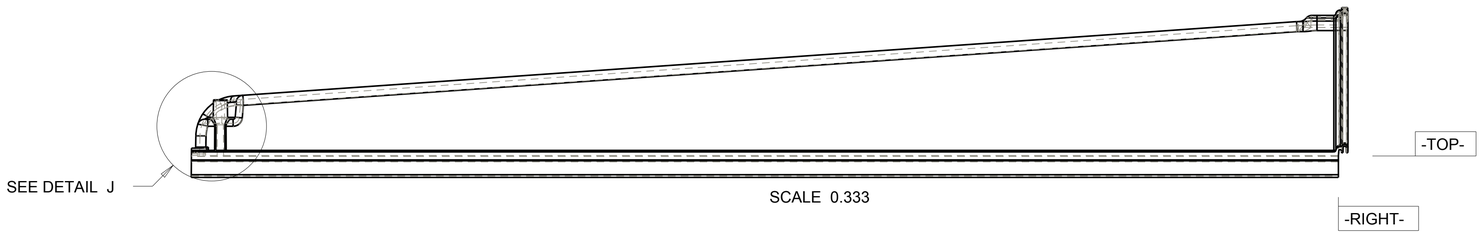

SCALE 0.333

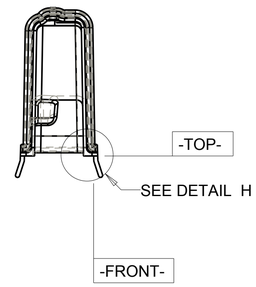

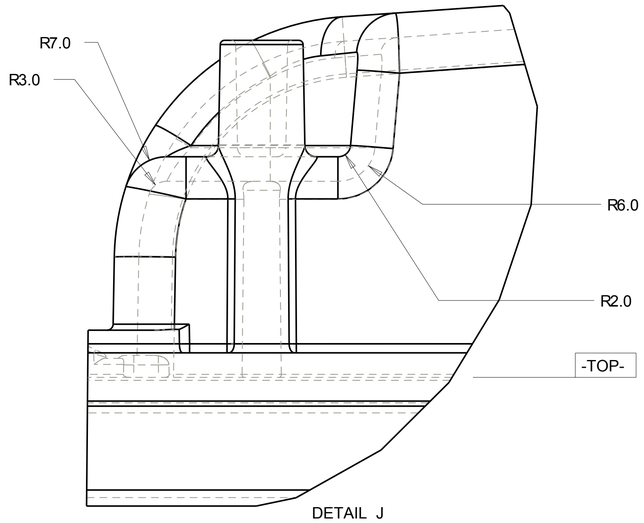

DETAIL J
SCALE 2.000

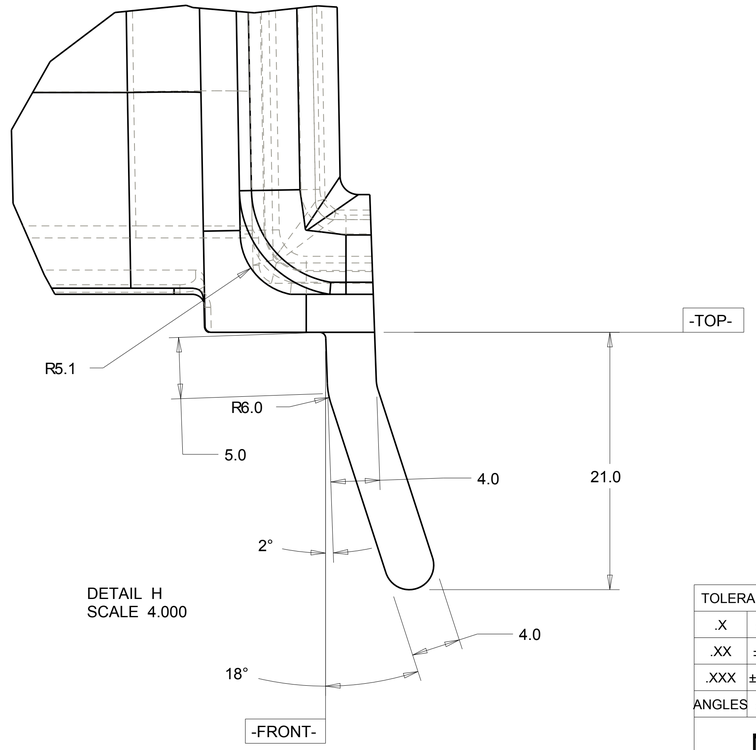

DETAIL H
SCALE 4.000

TOLERANCES		ORIGINATOR	Nick Arneson	17-Feb-11
.X	± 0.1	DRAWN BY	Nick Arneson	17-Feb-11
.XX	± 0.01	CHECKED		
.XXX	± 0.001	APPROVED		
ANGLES	± 0.5	USED ON:		

NOvA Experiment (Fermilab E929)

University of Minnesota

Manifold_Cover

Finish	Model Type: PART	Model File Name: FD_4_MANIF_COV_REV	Drawing File Name: FD_4_MANIF_COV_REV
	Scale 0.167 :1	Drawing Number	Revision / Sheet 7 of 9
	All dimensions are in mm unless specified otherwise		

REV	DESCRIPTION	DATE

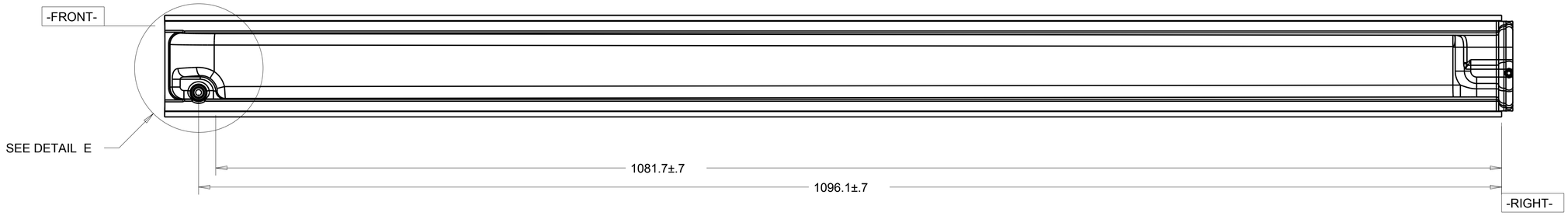

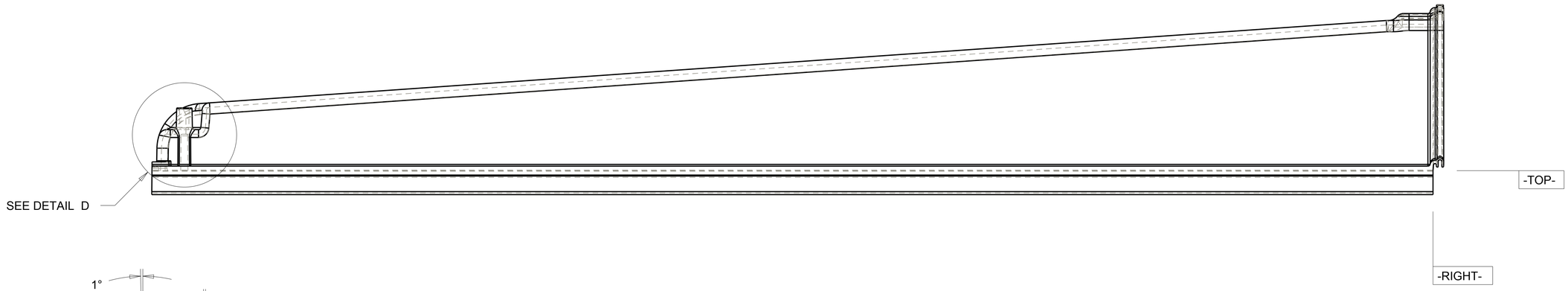

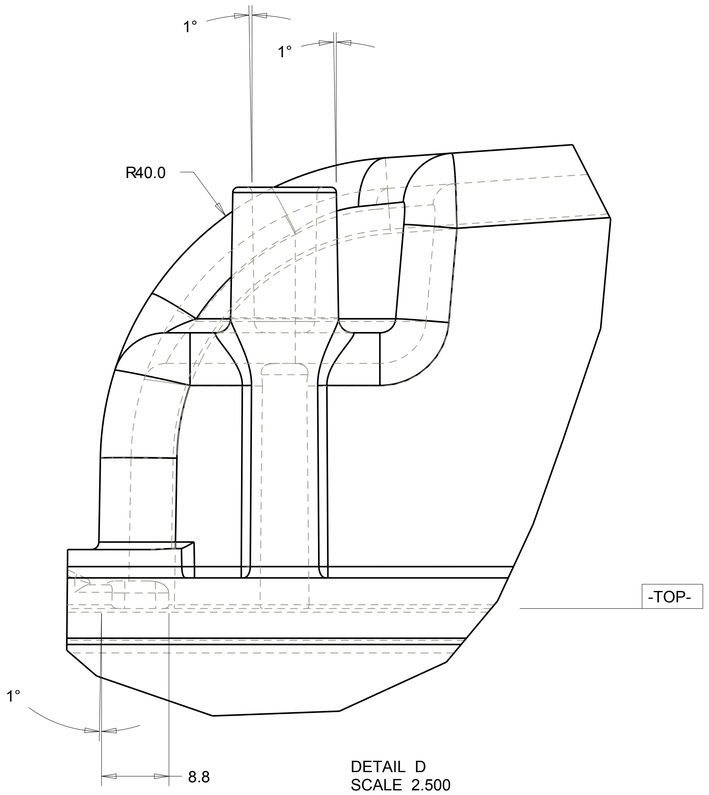

DETAIL D
SCALE 2.500

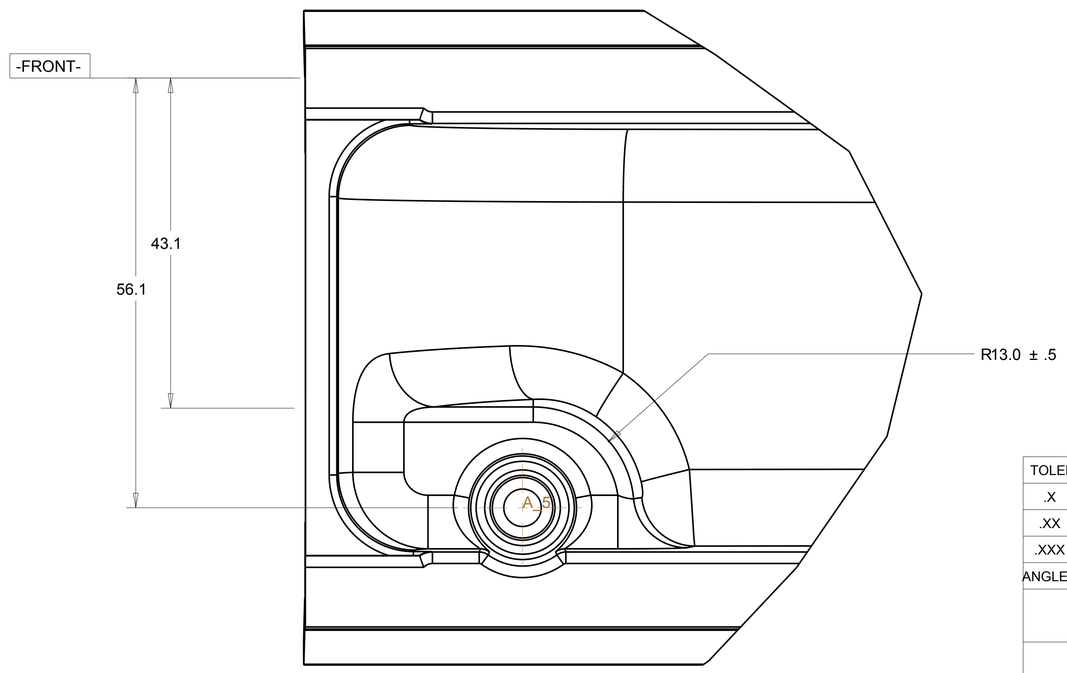

DETAIL E
SCALE 2.500

TOLERANCES		ORIGINATOR	Nick Arneson	17-Feb-11
.X	± 0.1	DRAWN BY	Nick Arneson	17-Feb-11
.XX	± 0.01	CHECKED		
.XXX	± 0.001	APPROVED		
ANGLES	± 0.5	USED ON:		

NOvA Experiment (Fermilab E929)

University of Minnesota

Manifold_Cover

Finish	Model Type: PART	Model File Name: FD_4_MANIF_COV_REV		Drawing File Name: FD_4_MANIF_COV_REV
	Scale 0.500 :1	Drawing Number	Revision	Sheet 8 of 9
	All dimensions are in mm unless specified otherwise			

REV	DESCRIPTION	DATE

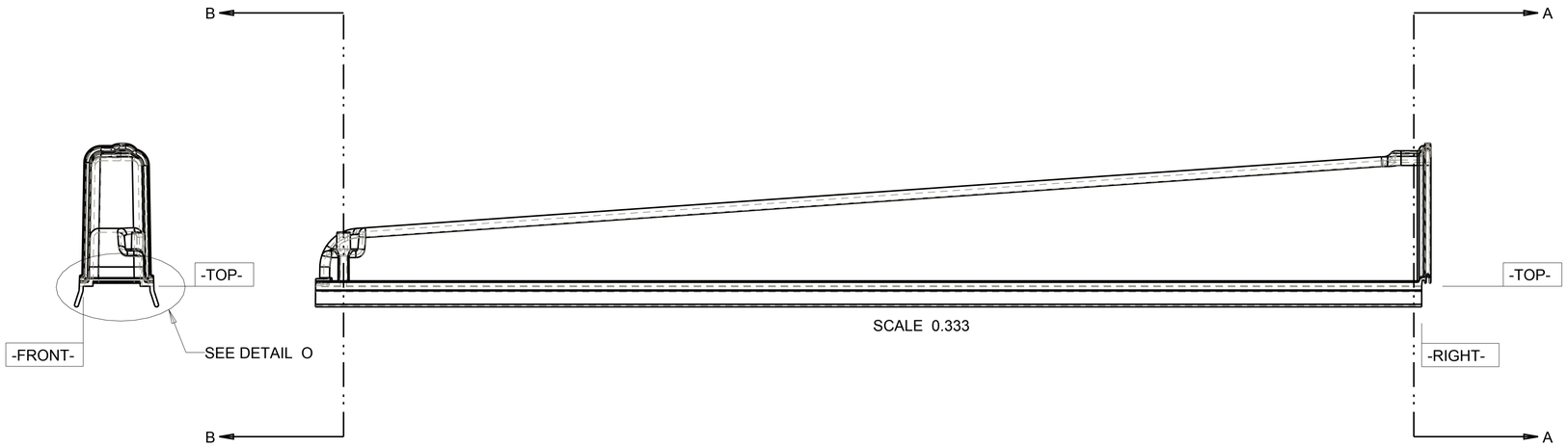

SCALE 0.333

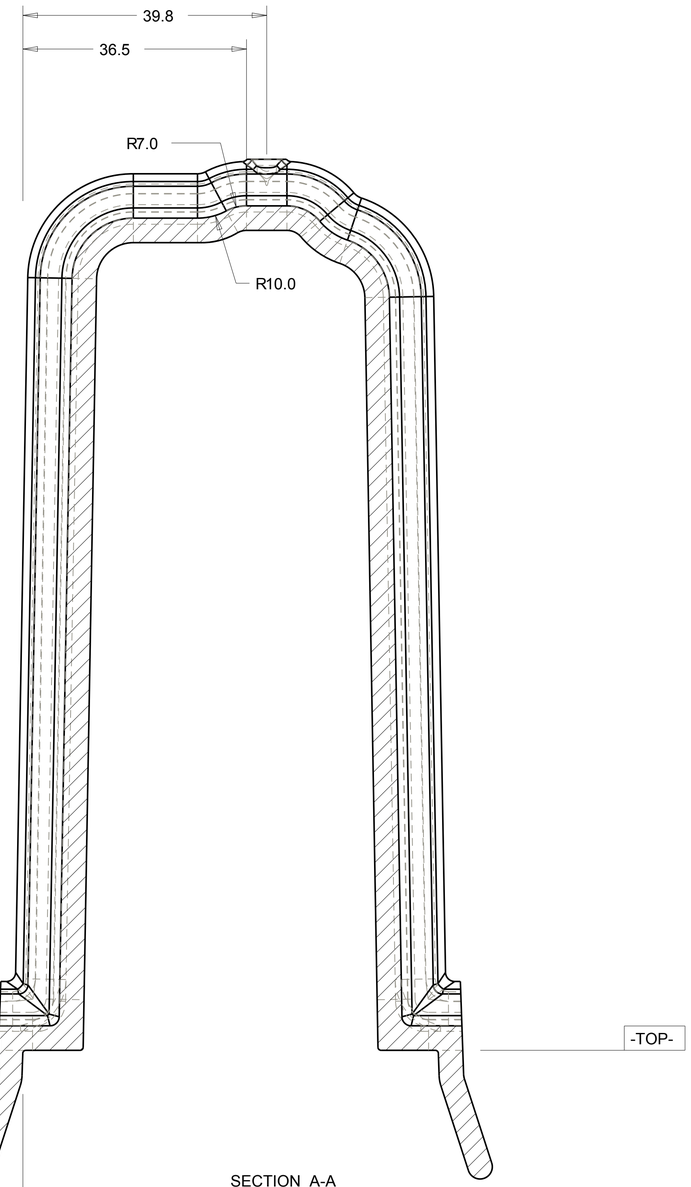

SECTION A-A
SCALE 2.000

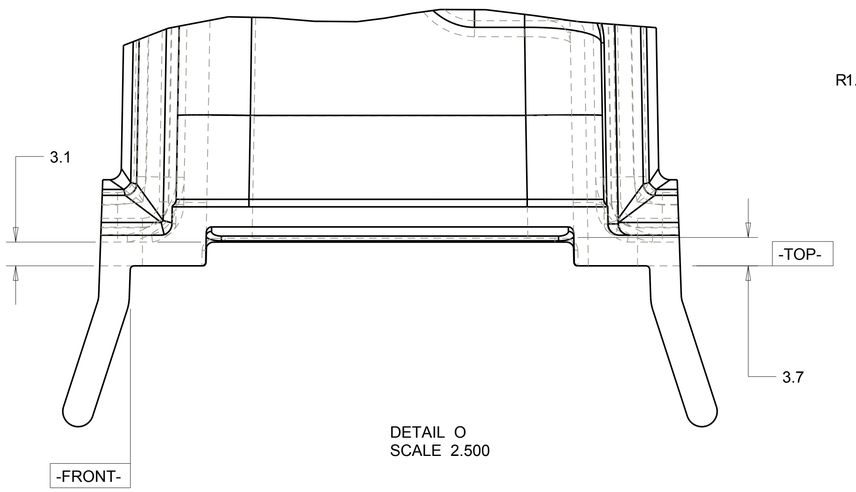

DETAIL O
SCALE 2.500

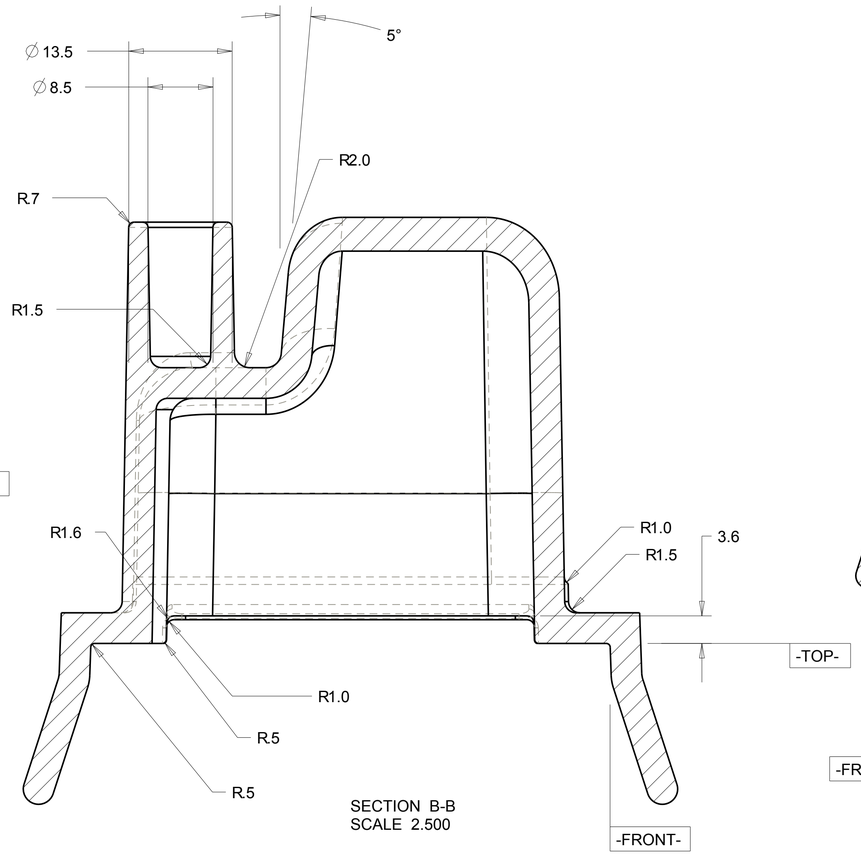

SECTION B-B
SCALE 2.500

TOLERANCES		ORIGINATOR	Nick Arneson	18-Feb-11
.X	± 0.1	DRAWN BY	Nick Arneson	18-Feb-11
.XX	± 0.01	CHECKED		
.XXX	± 0.001	APPROVED		
ANGLES	± 0.5	USED ON:		

NOvA Experiment (Fermilab E929)

University of Minnesota

Manifold_Cover

	Model Type:	Model File Name:	Drawing File Name:	
	PART	FD_4_MANIF_COV_REV	FD_4_MANIF_COV_REV	
	Scale	Drawing Number	Revision	Sheet
	0.500 :1			9 of 9
Finish	All dimensions are in mm unless specified otherwise			