REV	DESCRIPTION	DATE

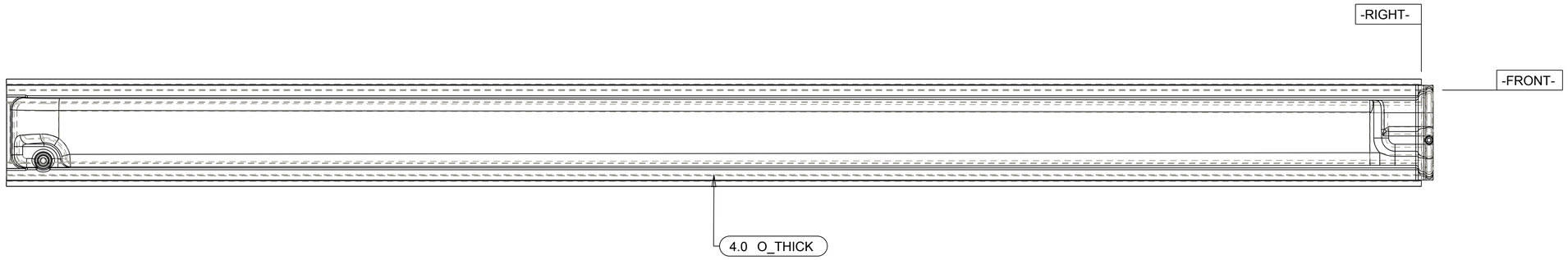

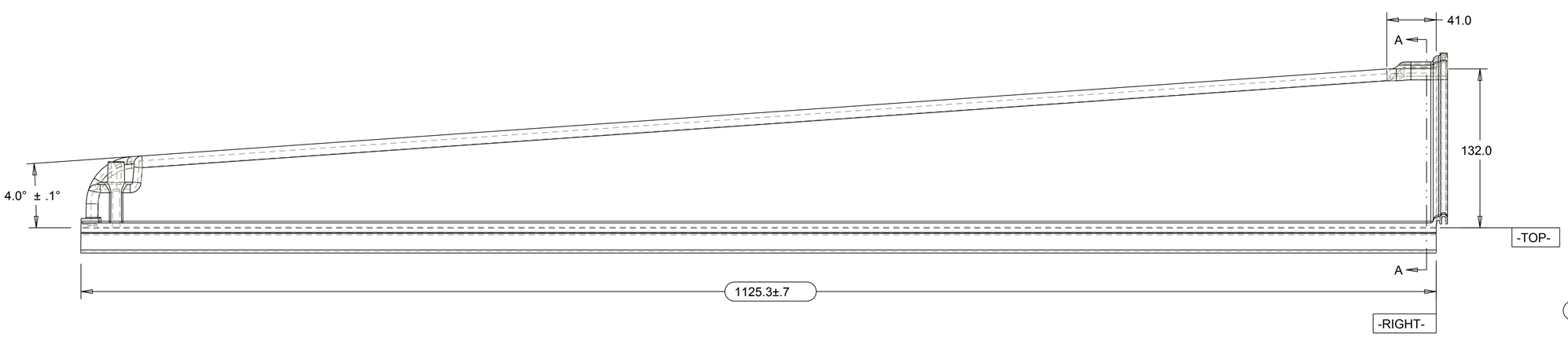

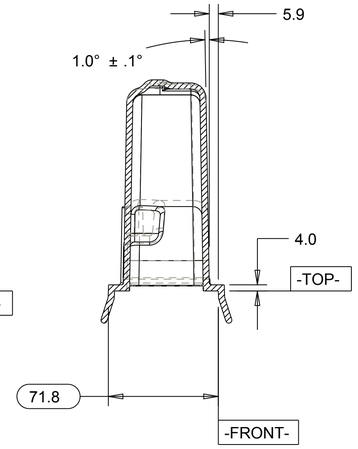

SECTION A-A

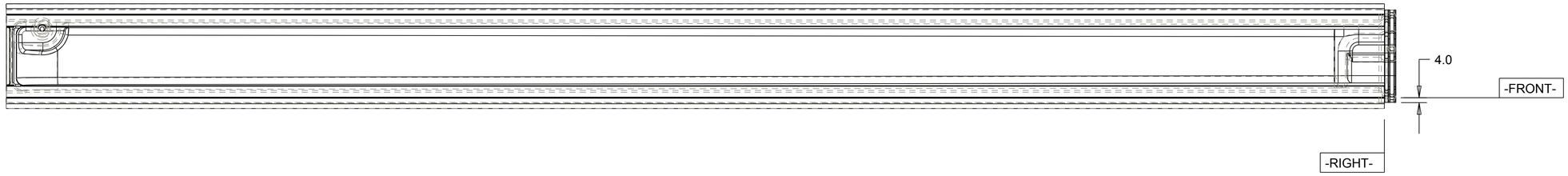

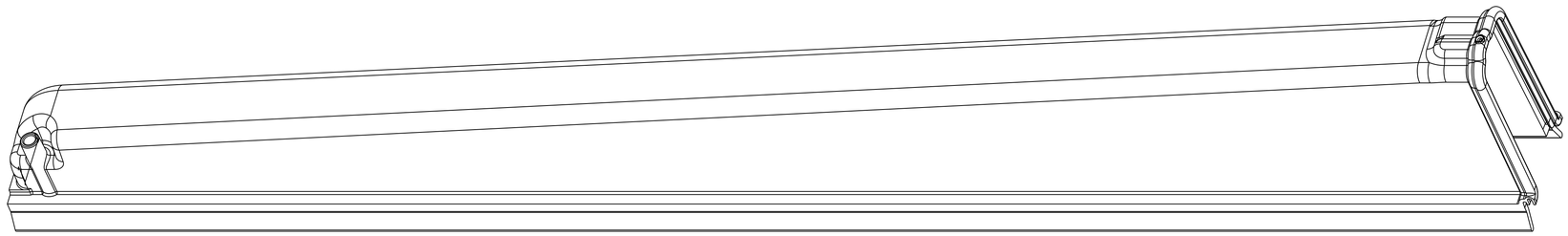

NOTES	
1	MATERIAL: TYPE I RIGID PVC, GEON M3500 OR M3800, BLACK
2	DO NOT USE MOLD RELEASE
3	HOT RUNNER MOLD REQUIRED
4	MATERIAL REGRIND NOT TO EXCEED SUPPLIER RECOMMENDATIONS
5	PART VOLUME: 1340 CC (82 IN^3)
6	QUANTITY: 12,500 (14 KT DETECTOR)

TOLERANCES		ORIGINATOR	N. ARNESON	17-Feb-11
.X	±0.1	DRAWN BY	N. ARNESON & T. CHASE	17-Feb-11
.XX	±0.01	CHECKED		
.XXX	±0.001	APPROVED		
ANGLES	±0.5	USED ON:		

NOvA Experiment (Fermilab E929)

University of Minnesota

Manifold_Cover

Model Type:	Model File Name:	Drawing File Name:	
PART	FD_4_MANIF_COVER	FD_4_MANIF_COVER	
Scale	Drawing Number	Revision	Sheet
0.500:1	1		1 of 9

Finish

All dimensions are in mm unless specified otherwise

REV	DESCRIPTION	DATE

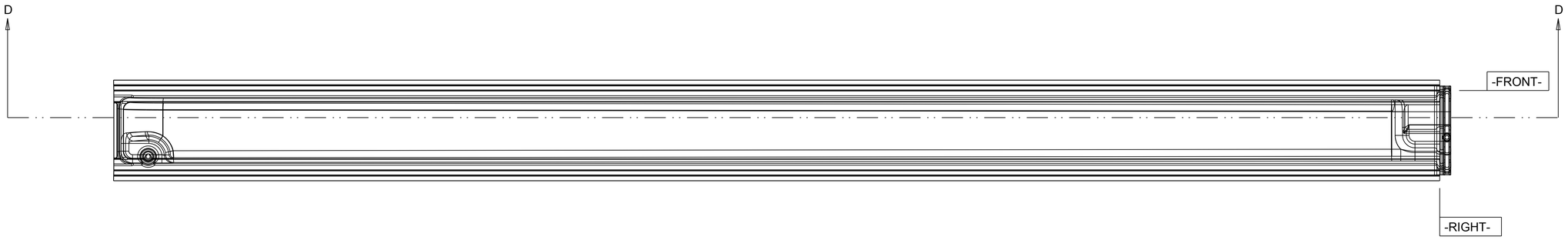

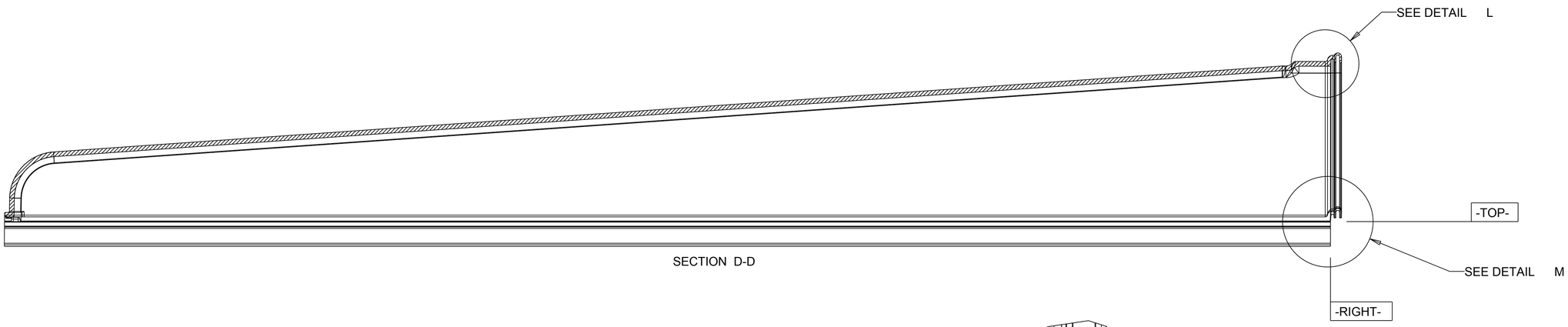

SECTION D-D

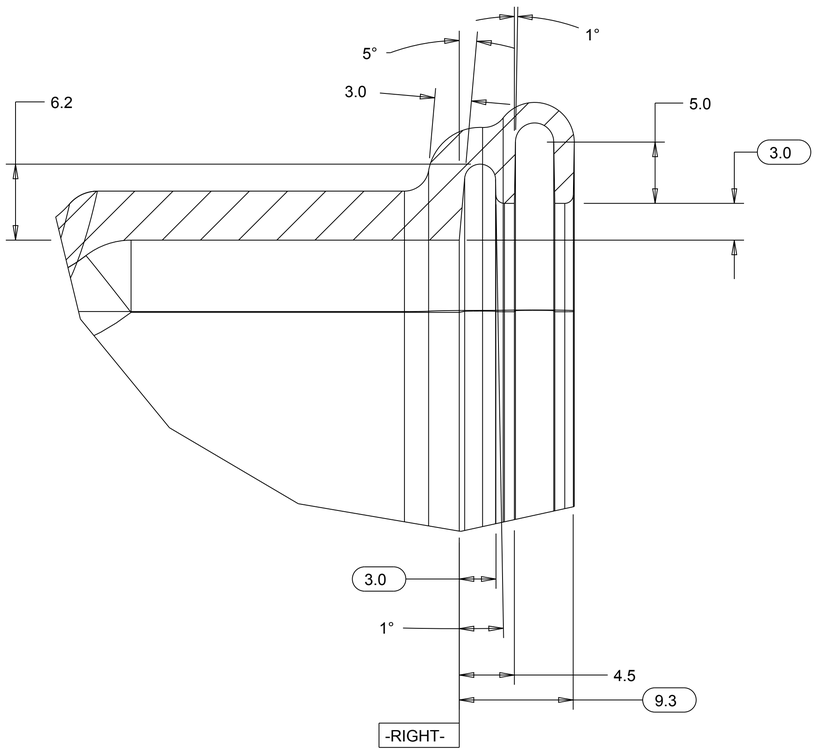

DETAIL L
SCALE 4.000

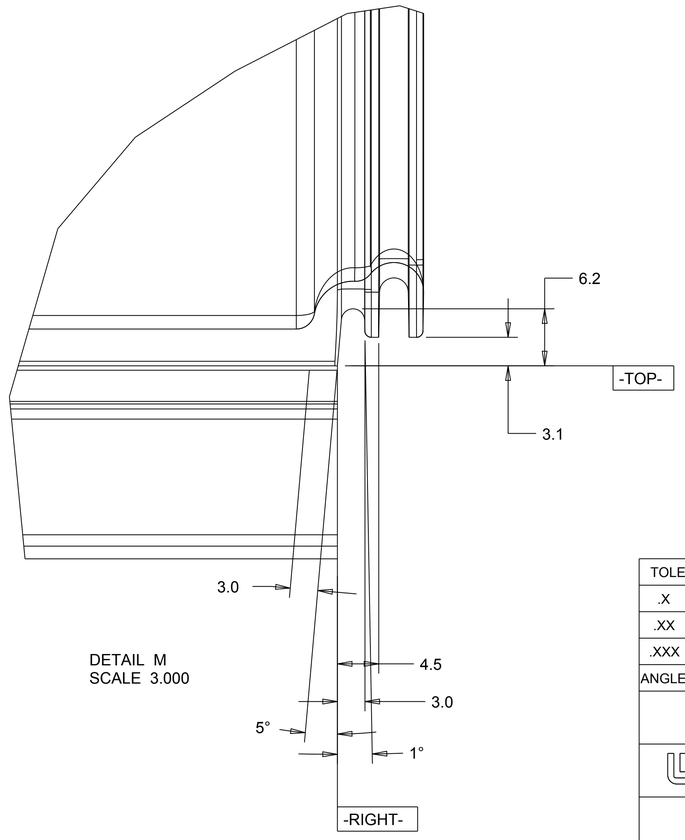

DETAIL M
SCALE 3.000

TOLERANCES		ORIGINATOR	Nick Arneson	18-Feb-11
.X	±0.1	DRAWN BY	Nick Arneson	18-Feb-11
.XX	±0.01	CHECKED		
.XXX	±0.001	APPROVED		
ANGLES	±0.5	USED ON:		

NOvA Experiment (Fermilab E929)

University of Minnesota

Manifold_Cover

Model Type:	Model File Name:	Drawing File Name:	
PART	FD_4_MANIF_COVER	FD_4_MANIF_COVER	
Scale	Drawing Number	Revision	Sheet
0.500:1			2 of 9

Finish

All dimensions are in mm unless specified otherwise

REV	DESCRIPTION	DATE

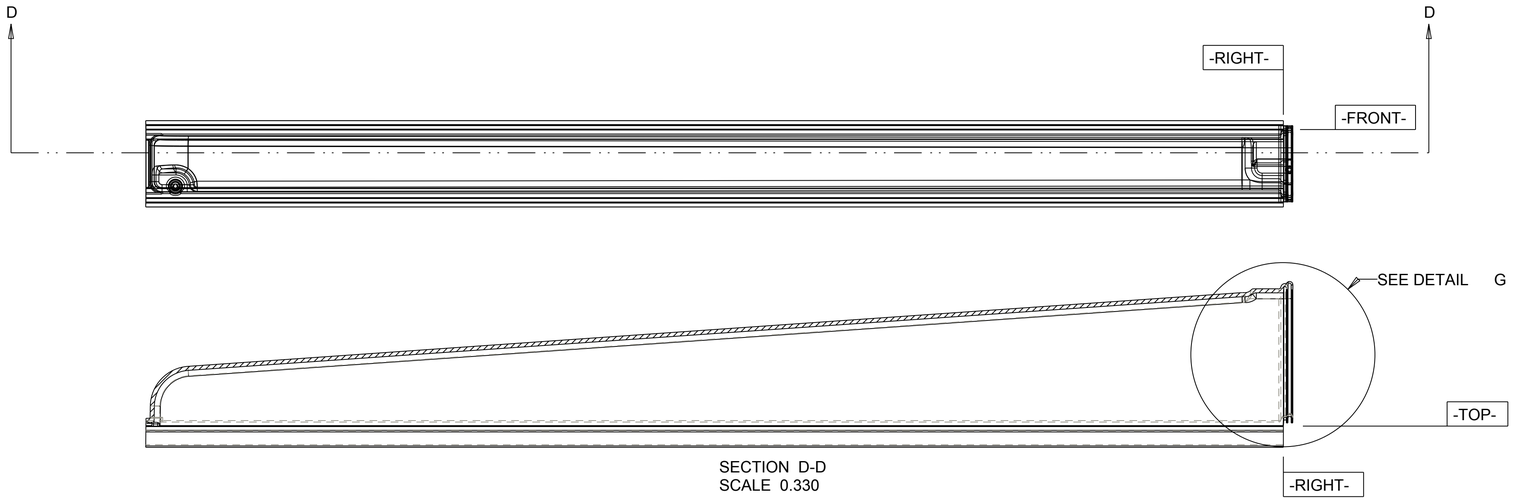

SECTION D-D
SCALE 0.330

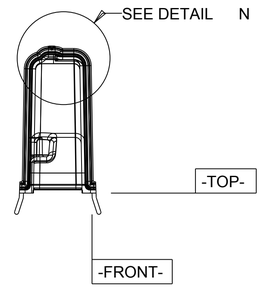

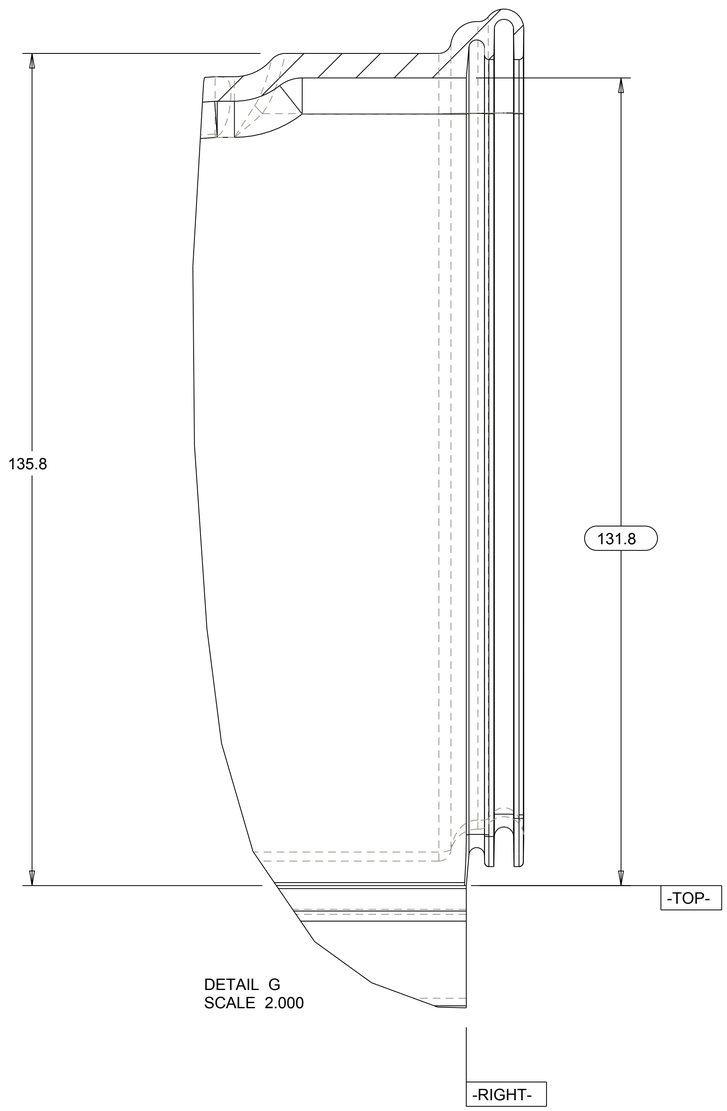

DETAIL G
SCALE 2.000

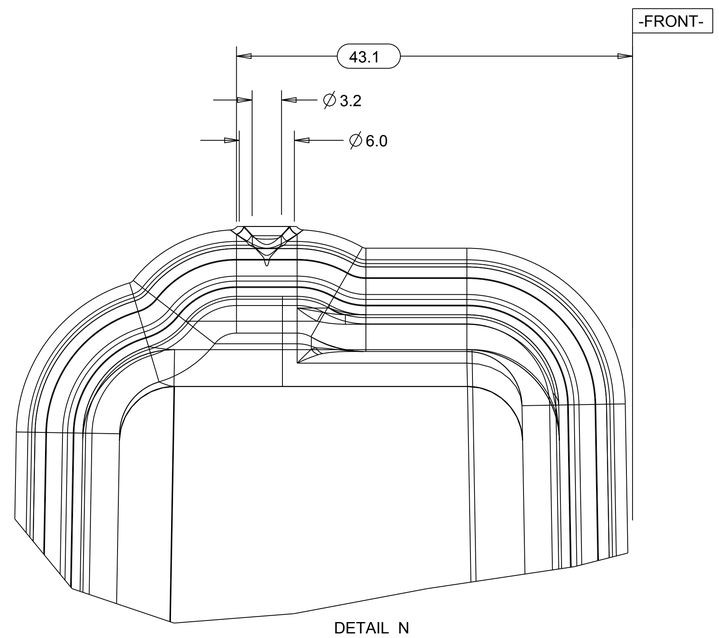

DETAIL N
SCALE 3.000

TOLERANCES		ORIGINATOR	N. ARNESON	17-Feb-11
.X	±0.1	DRAWN BY	N. ARNESON & T. CHASE	17-Feb-11
.XX	±0.01	CHECKED		
.XXX	±0.001	APPROVED		
ANGLES	±0.5	USED ON:		

NOvA Experiment (Fermilab E929)

University of Minnesota

Manifold_Cover

Model Type:	Model File Name:	Drawing File Name:	
PART	FD_4_MANIF_COVER	FD_4_MANIF_COVER	
Scale	Drawing Number	Revision	Sheet
0.500:1			3 of 9

Finish

All dimensions are in mm unless specified otherwise

REV	DESCRIPTION	DATE

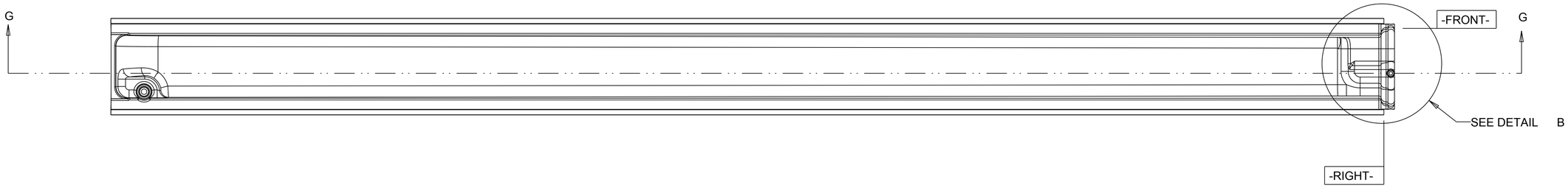

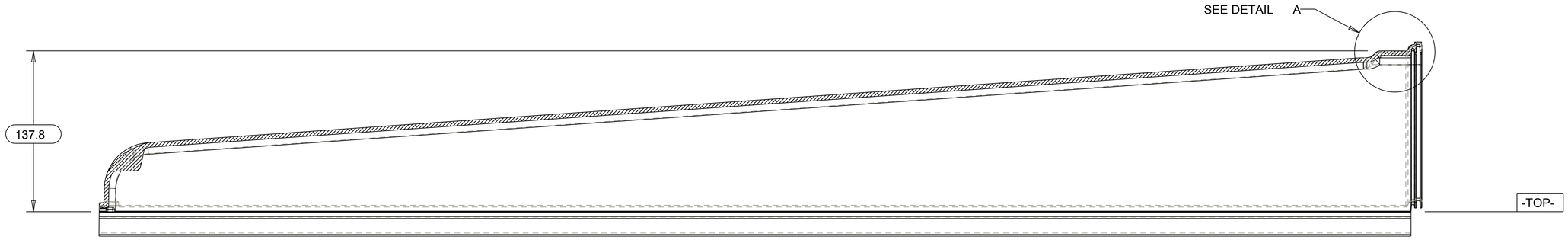

SECTION G-G

-RIGHT-

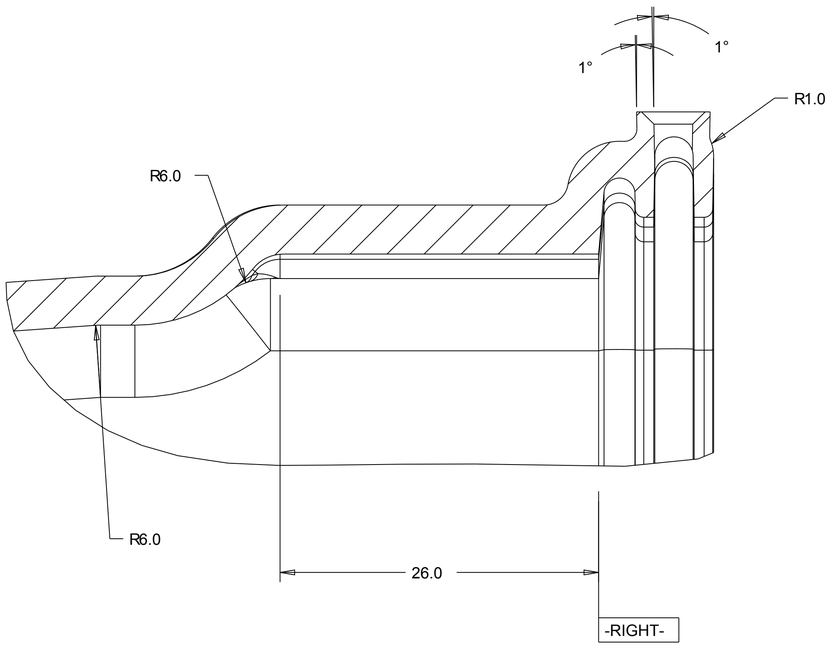

DETAIL A
SCALE 4.000

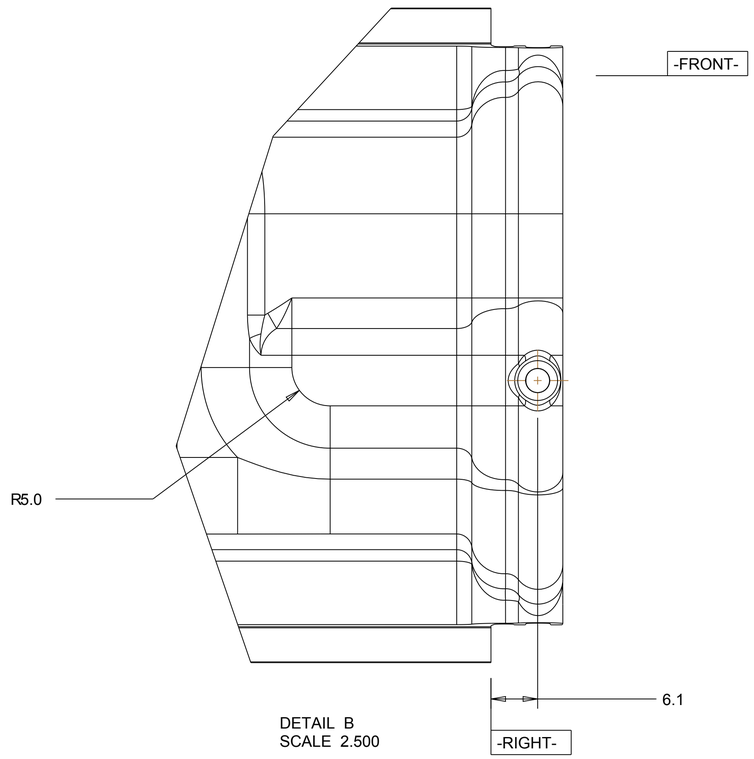

DETAIL B
SCALE 2.500

TOLERANCES		ORIGINATOR	N. ARNESON	17-Feb-11
.X	±0.1	DRAWN BY	N. ARNESON & T. CHASE	17-Feb-11
.XX	±0.01	CHECKED		
.XXX	±0.001	APPROVED		
ANGLES	±0.5	USED ON:		

NOvA Experiment (Fermilab E929)

University of Minnesota

Manifold_Cover

Finish	Model Type: PART	Model File Name: FD_4_MANIF_COVER	Drawing File Name: FD_4_MANIF_COVER	
	Scale 0.500:1	Drawing Number	Revision	Sheet 4 of 9
	All dimensions are in mm unless specified otherwise			

REV	DESCRIPTION	DATE

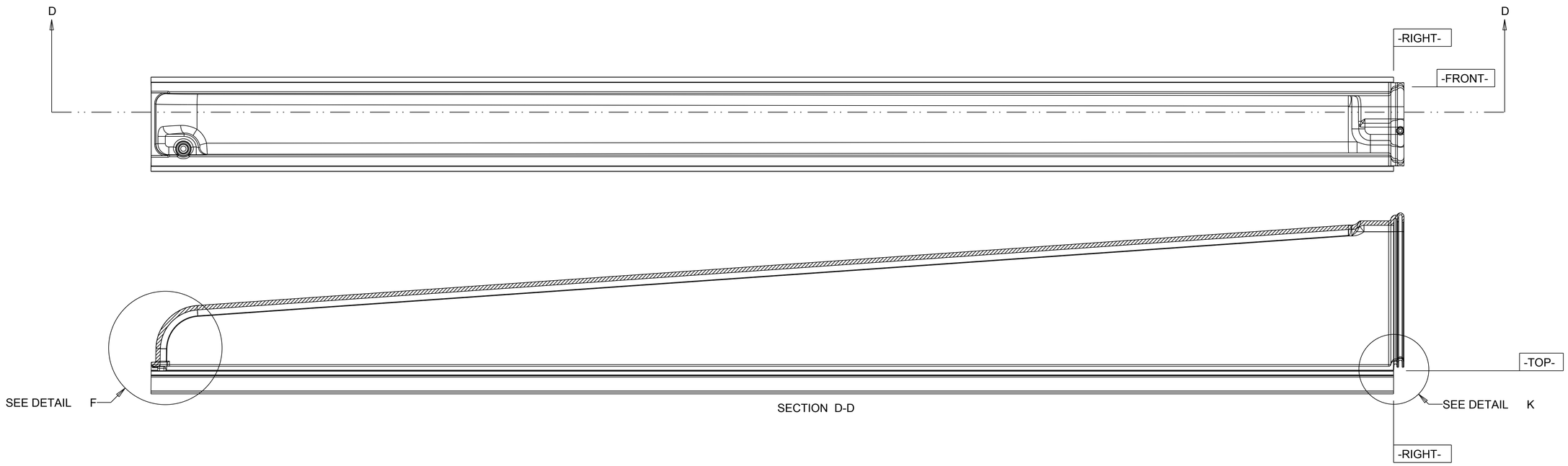

SECTION D-D

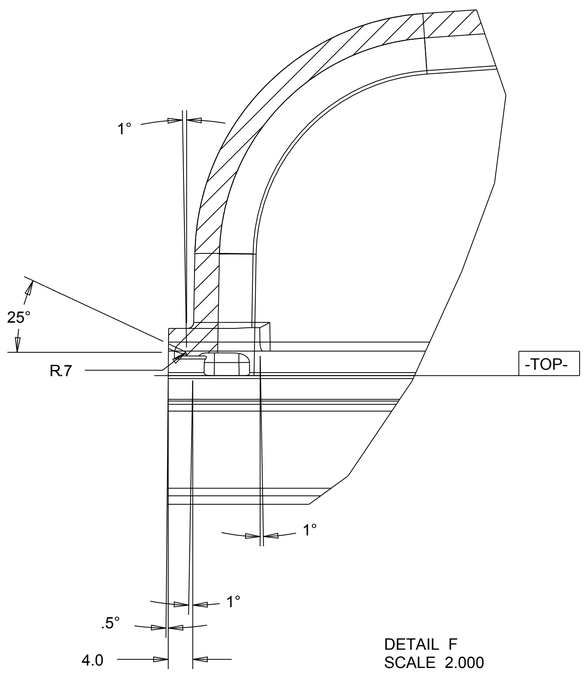

DETAIL F
SCALE 2.000

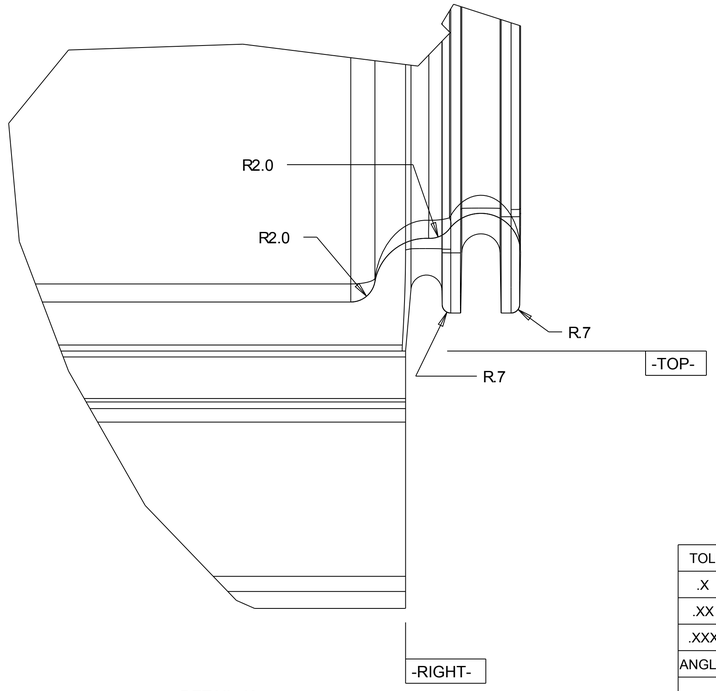

DETAIL K
SCALE 4.000

TOLERANCES		ORIGINATOR	Nick Arneson	17-Feb-11
.X	±0.1	DRAWN BY	Nick Arneson	17-Feb-11
.XX	±0.01	CHECKED		
.XXX	±0.001	APPROVED		
ANGLES	±0.5	USED ON:		

NOvA Experiment (Fermilab E929)

University of Minnesota

Manifold_Cover

Model Type:	Model File Name:	Drawing File Name:	
PART	FD_4_MANIF_COVER	FD_4_MANIF_COVER	
Scale	Drawing Number	Revision	Sheet
0.500:1			5 of 9

Finish

All dimensions are in mm unless specified otherwise

REV	DESCRIPTION	DATE

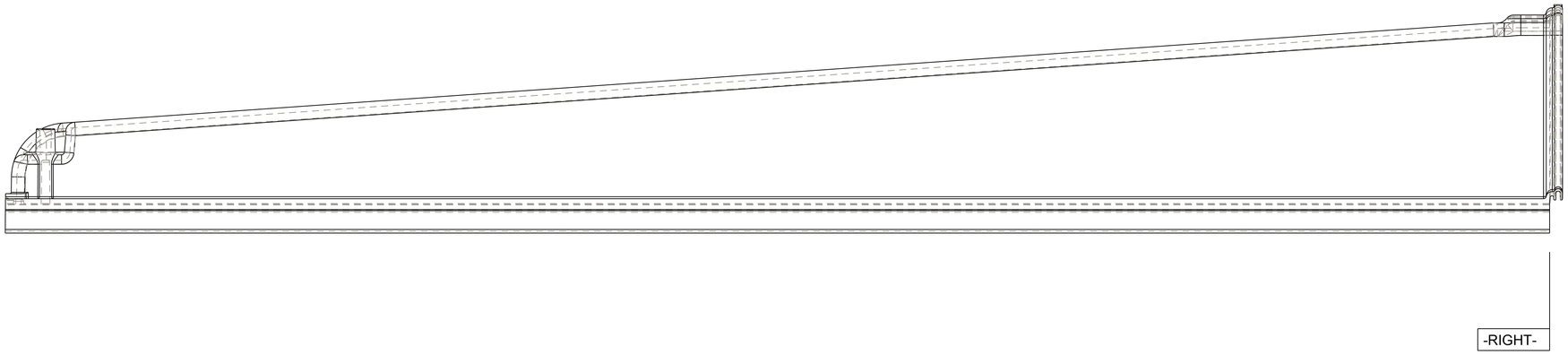

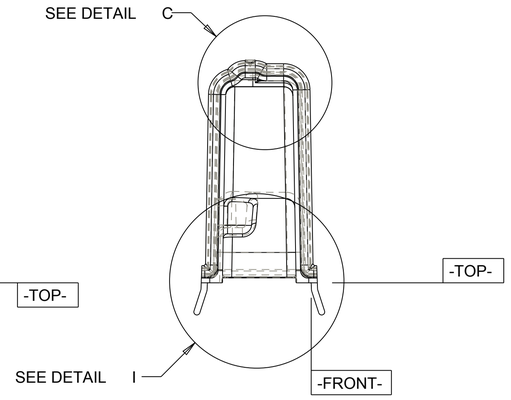

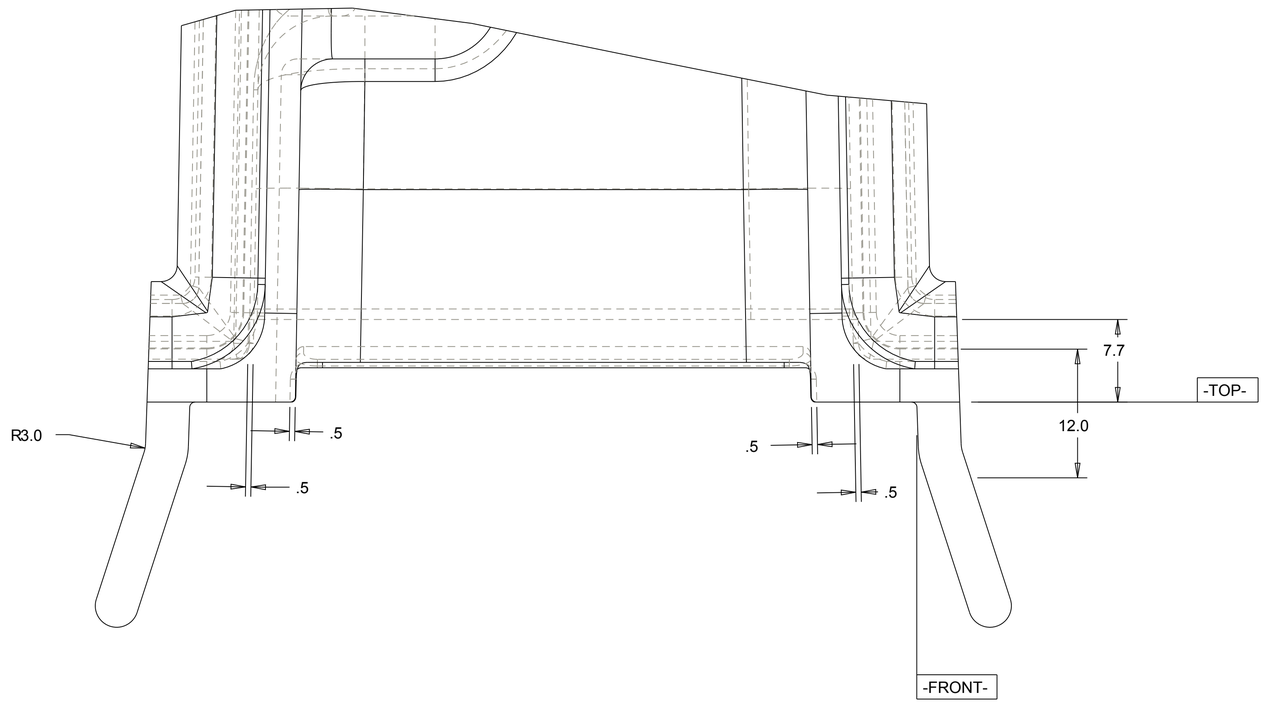

DETAIL I
SCALE 3.500

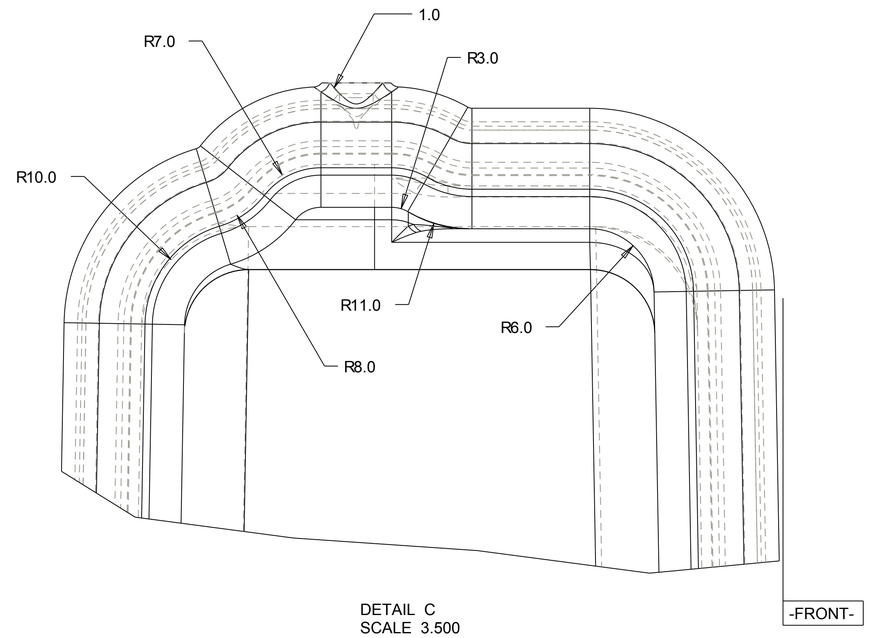

DETAIL C
SCALE 3.500

TOLERANCES		ORIGINATOR	Nick Arneson	17-Feb-11
.X	±0.1	DRAWN BY	Nick Arneson	17-Feb-11
.XX	±0.01	CHECKED		
.XXX	±0.001	APPROVED		
ANGLES	±0.5	USED ON:		

NOvA Experiment (Fermilab E929)

University of Minnesota

Manifold_Cover

Finish	Model Type: PART	Model File Name: FD_4_MANIF_COVER		Drawing File Name: FD_4_MANIF_COVER
	Scale 0.500:1	Drawing Number	Revision	Sheet 6 of 9
	All dimensions are in mm unless specified otherwise			

REV	DESCRIPTION	DATE

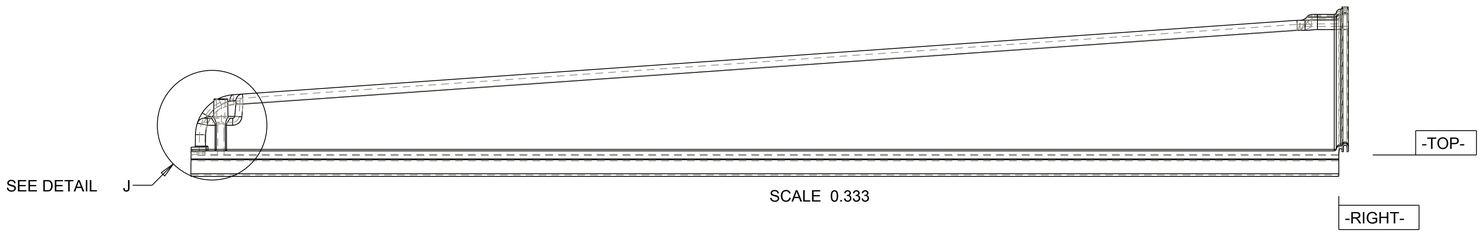

SCALE 0.333

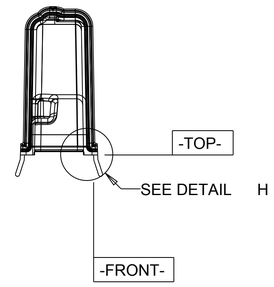

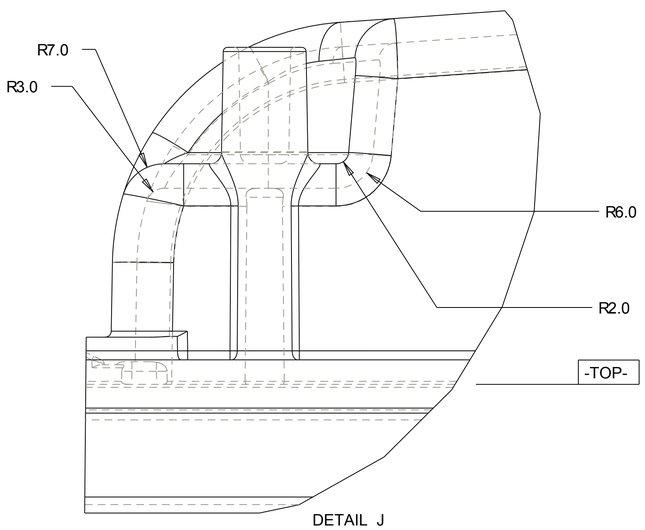

DETAIL J
SCALE 2.000

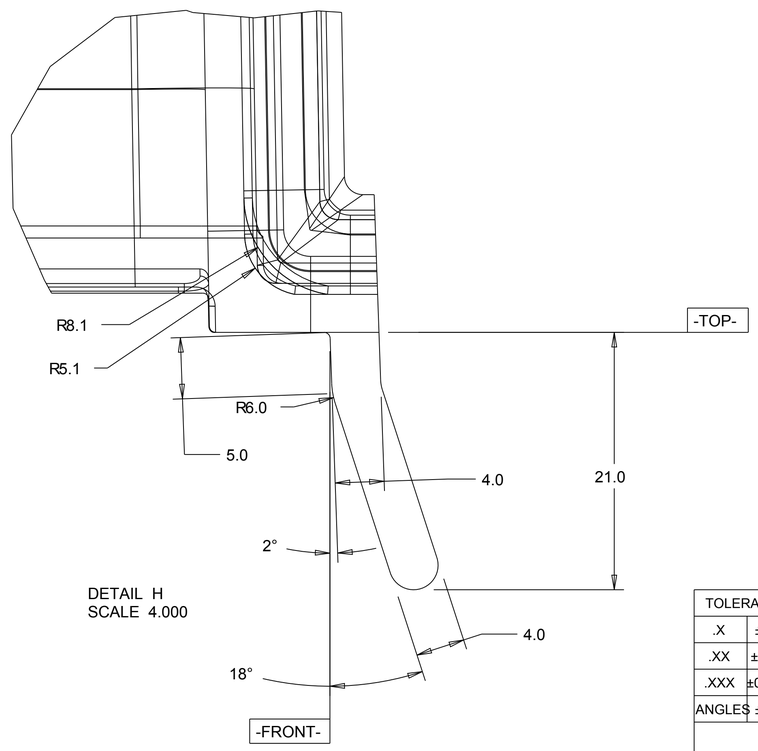

DETAIL H
SCALE 4.000

TOLERANCES		ORIGINATOR	Nick Arneson	17-Feb-11
.X	±0.1	DRAWN BY	Nick Arneson	17-Feb-11
.XX	±0.01	CHECKED		
.XXX	±0.001	APPROVED		
ANGLES	±0.5	USED ON:		

NOvA Experiment (Fermilab E929)

University of Minnesota

Manifold_Cover

Finish	Model Type: PART	Model File Name: FD_4_MANIF_COVER	Drawing File Name: FD_4_MANIF_COVER	
	Scale 0.167:1	Drawing Number	Revision	Sheet 7 of 9
	All dimensions are in mm unless specified otherwise			

REV	DESCRIPTION	DATE

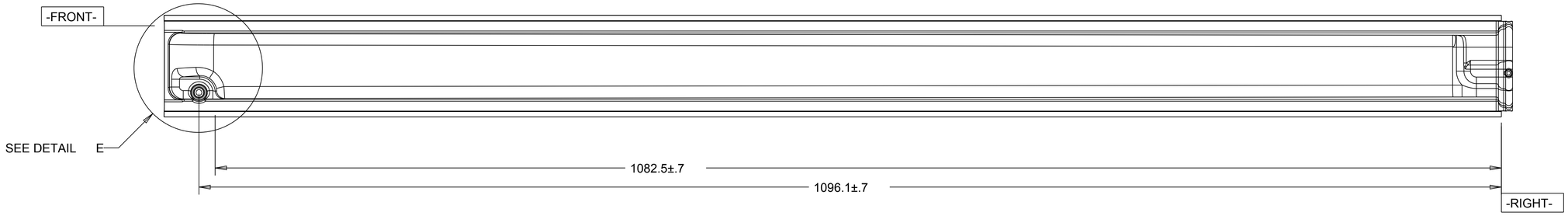

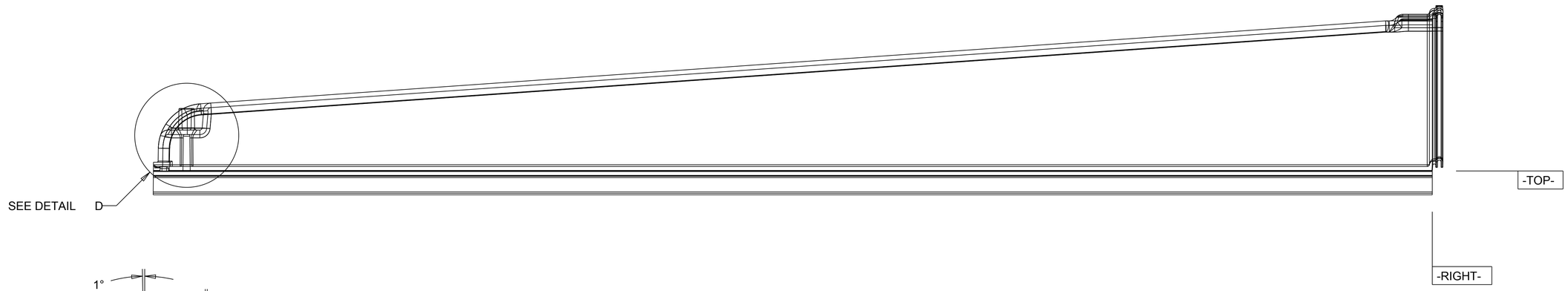

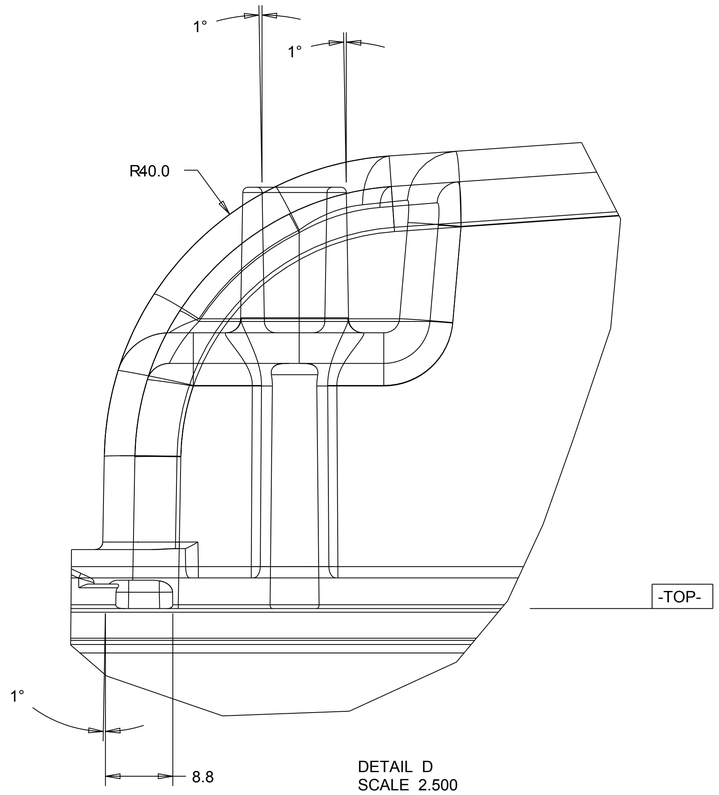

DETAIL D
SCALE 2.500

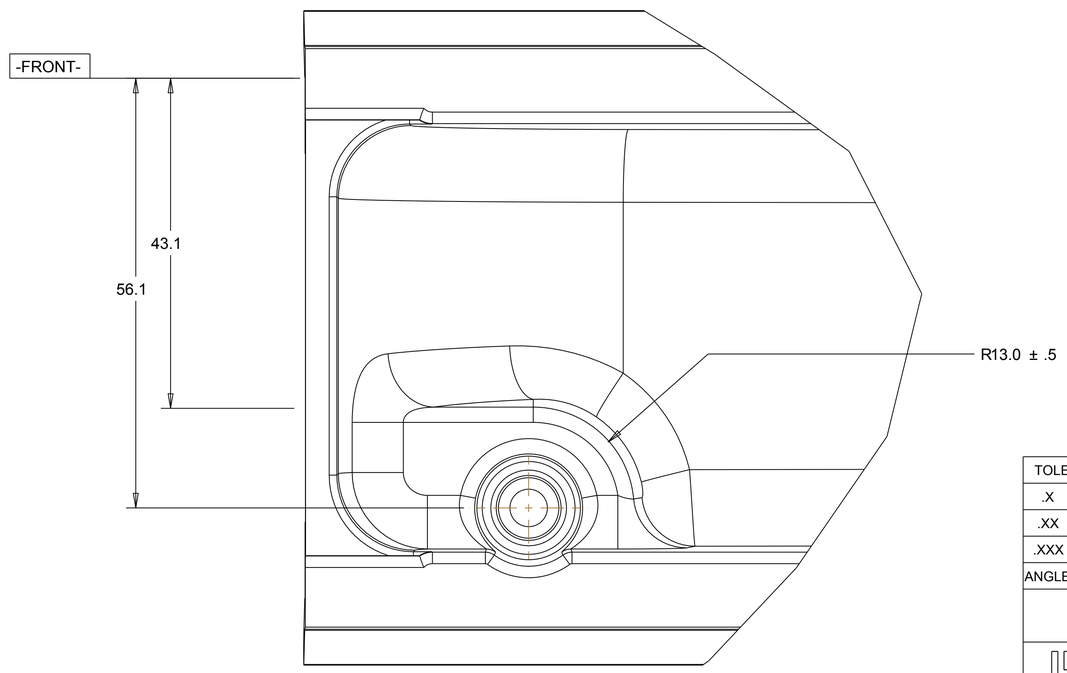

DETAIL E
SCALE 2.500

TOLERANCES		ORIGINATOR	Nick Arneson	17-Feb-11
.X	±0.1	DRAWN BY	Nick Arneson	17-Feb-11
.XX	±0.01	CHECKED		
.XXX	±0.001	APPROVED		
ANGLES	±0.5	USED ON:		

NOvA Experiment (Fermilab E929)

University of Minnesota

Manifold_Cover

Model Type:	Model File Name:	Drawing File Name:	
PART	FD_4_MANIF_COVER	FD_4_MANIF_COVER	
Scale	Drawing Number	Revision	Sheet
0.500:1			8 of 9

Finish

All dimensions are in mm unless specified otherwise

REV	DESCRIPTION	DATE

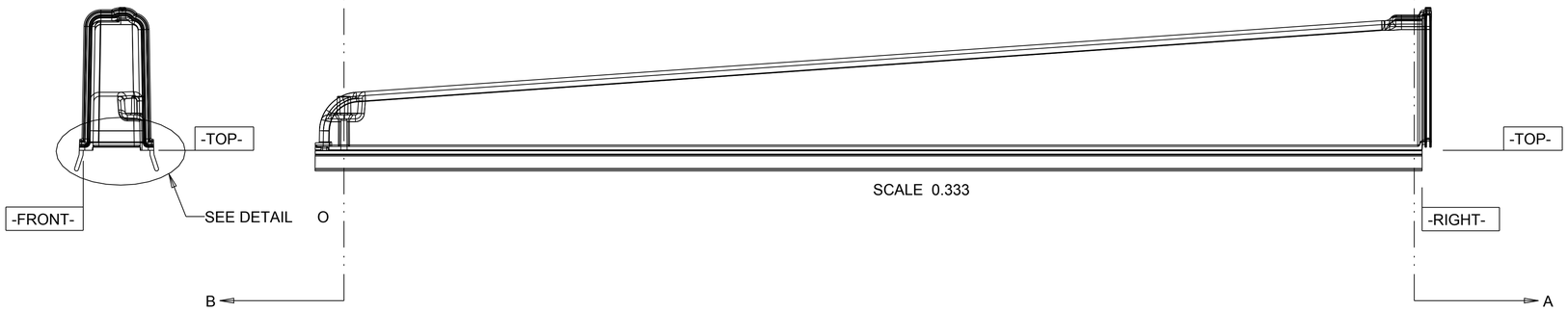

SCALE 0.333

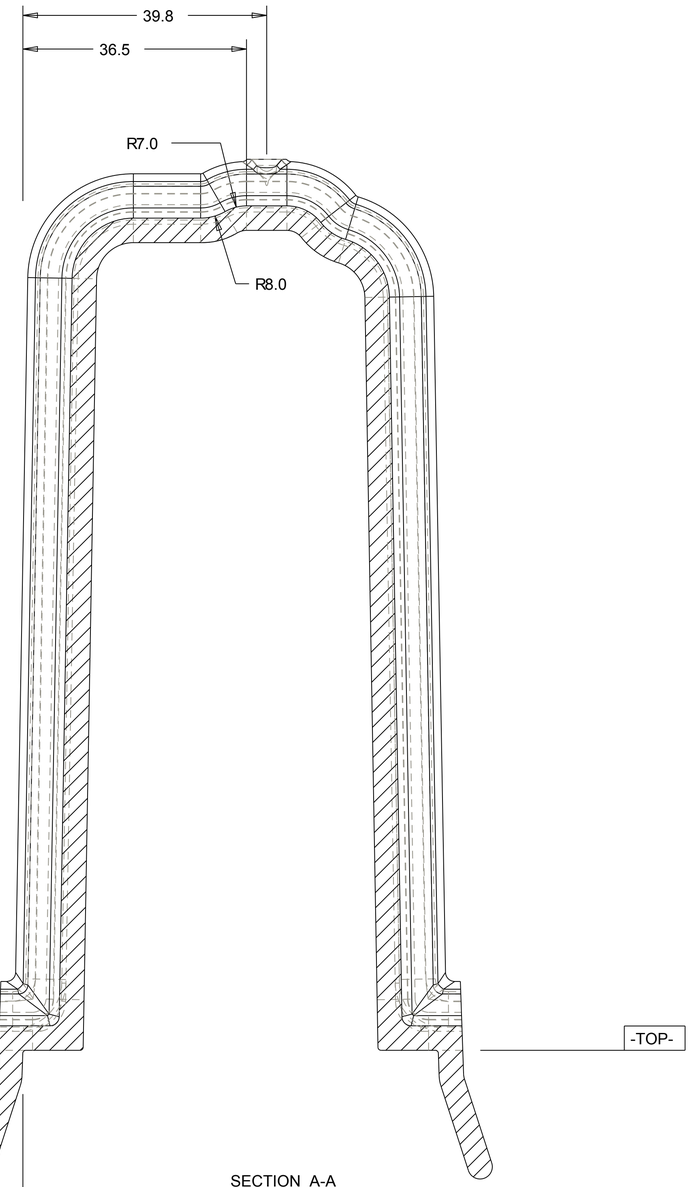

SECTION A-A
SCALE 2.000

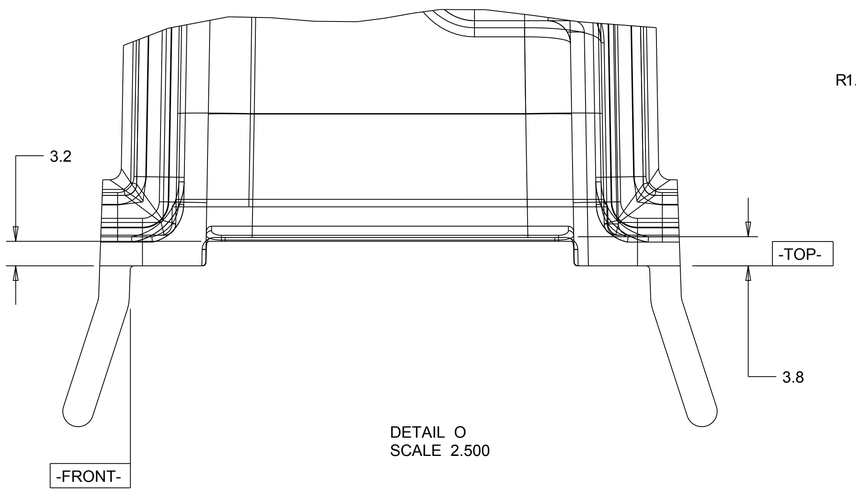

DETAIL O
SCALE 2.500

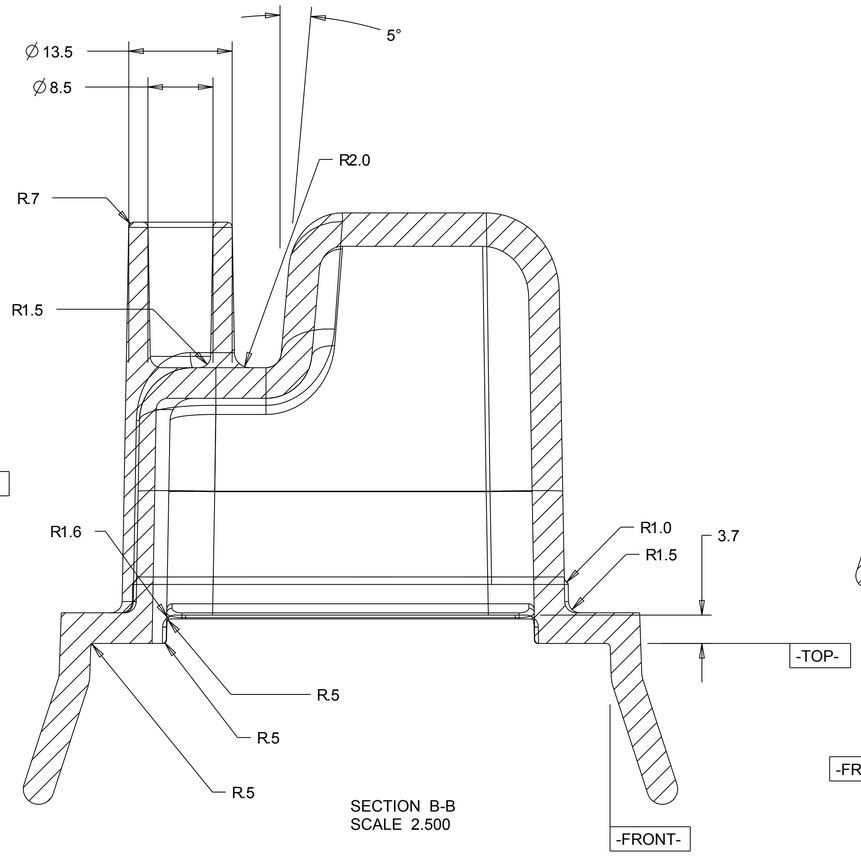

SECTION B-B
SCALE 2.500

TOLERANCES		ORIGINATOR	Nick Arneson	18-Feb-11
.X	±0.1	DRAWN BY	Nick Arneson	18-Feb-11
.XX	±0.01	CHECKED		
.XXX	±0.001	APPROVED		
ANGLES	±0.5	USED ON:		

NOvA Experiment (Fermilab E929)

University of Minnesota

Manifold_Cover

Finish	Model Type: PART	Model File Name: FD_4_MANIF_COVER		Drawing File Name: FD_4_MANIF_COVER
	Scale 0.500:1	Drawing Number	Revision	Sheet 9 of 9
	All dimensions are in mm unless specified otherwise			