REV	DESCRIPTION	DATE

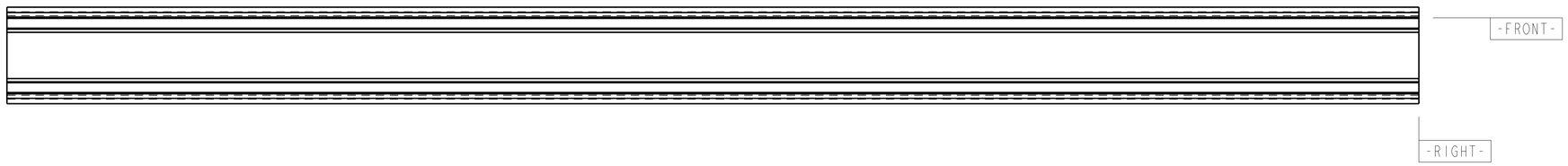

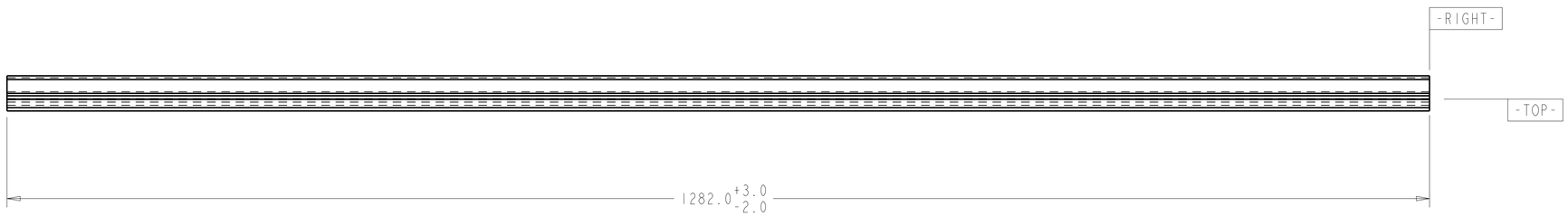

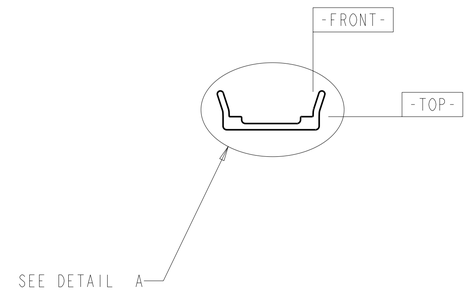

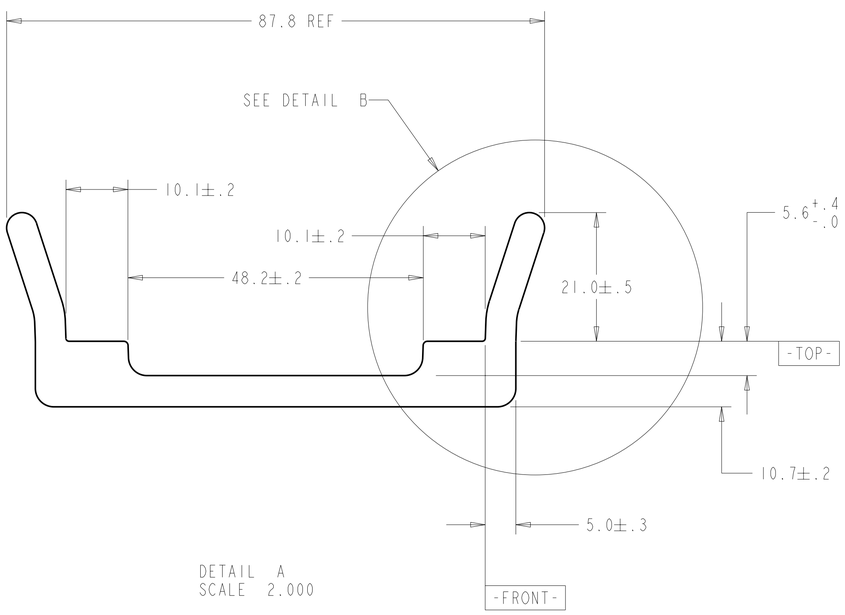

DETAIL A
SCALE 2.000

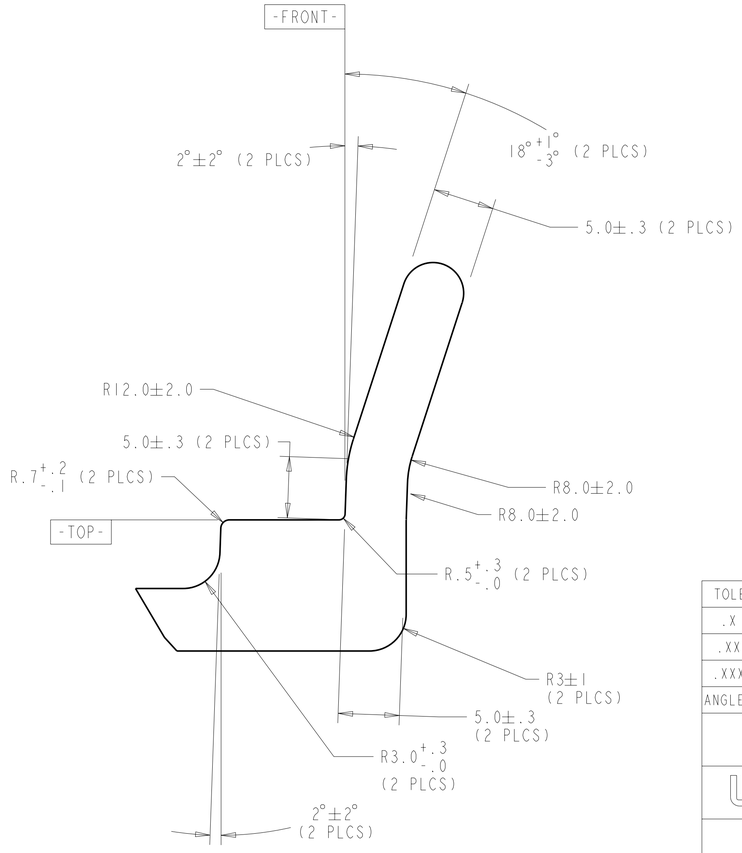

DETAIL B
SCALE 4.000

NOTES	
1	MATERIAL: RIGID (TYPE I) WHITE PVC, GEON 6935-1380
2	FLATNESS TOLERANCE: ±1 MILLIMETER PER METER
3	QUANTITY: 12,500 (14 KT DETECTOR)

TOLERANCES		ORIGINATOR	T. Chase	11-Jul-06
.X	±0.1	DRAWN BY	T. Chase	11-Jul-06
.XX	±0.01	CHECKED		
.XXX	±0.001	APPROVED		
ANGLES	±0.5	USED ON: Extrutech test modules		

NOvA Experiment (Fermilab E929)

University of Minnesota

Extruded End Plate

Model Type:	Model File Name:	Drawing File Name:	
PART	FD_END_PLATE	FD_END_PLATE	
Scale	Drawing Number	Revision	Sheet
0.400:1			1 of 1

Finish

All dimensions are in mm unless specified otherwise