REV	DESCRIPTION	DRAWN	DATE
		APPROVED	DATE

VOID
NOT USED
2011 APRIL 06

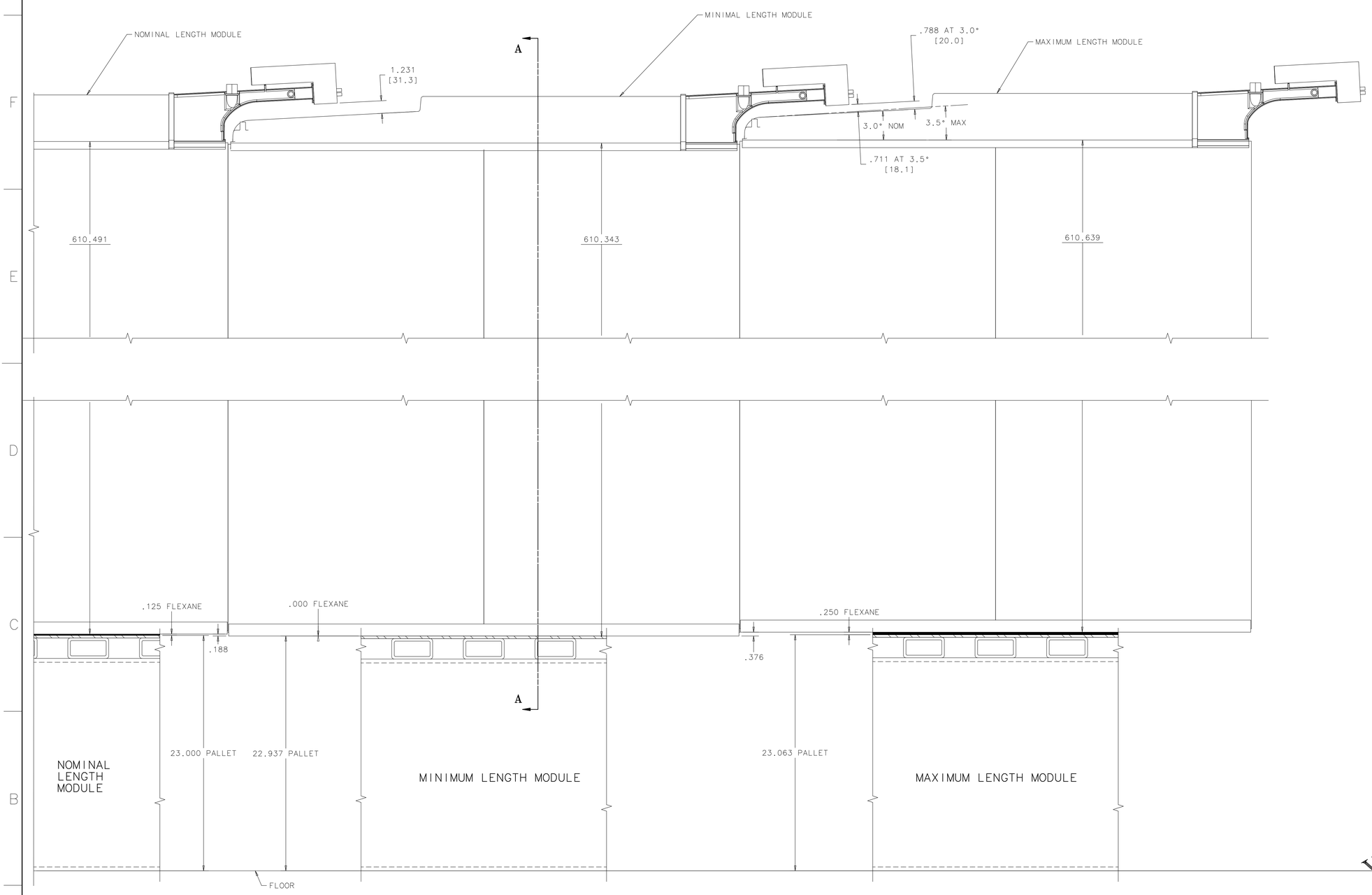

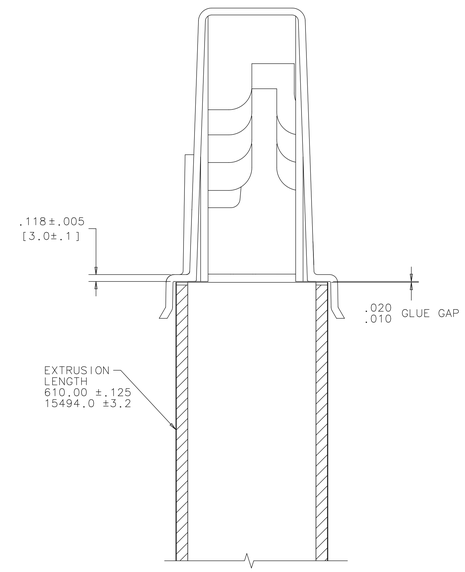

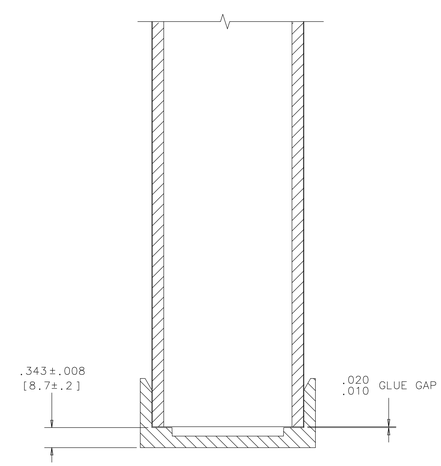

SECTION A–A
SCALE: 1:1

VOID
NOT USED
2011 APRIL 06

UNLESS OTHERWISE SPECIFIED					
.XX	.XXX	ANGLES	ORIGINATOR	D.FRIEND	17-DEC-2010
± ---	± ---	± ---	DRAWN	D.FRIEND	17-DEC-2010
			CHECKED		
			APPROVED		

1. BREAK ALL SHARP EDGES MAX.
2. DO NOT SCALE DRAWING.
3. DIMENSIONS BASED UPON ASME Y14.5M-1994
4. MAX. ALL MACH. SURFACES
5. DRAWING UNITS: U.S. INCH

USED ON

MATERIAL
SEE PARTS LIST ABOVE

FERMI NATIONAL ACCELERATOR LABORATORY
UNITED STATES DEPARTMENT OF ENERGY

NOVA-FAR_DETECTOR
VERTICAL MODULE CLEARANCES
PART TOLERANCE STACKUP LAYOUT

SCALE	DRAWING NUMBER	SHEET	REV
1:2 & AS NOTED	3929.330-ME-486397	1 OF 1	

CREATED WITH : Ideas12NXSeries | GROUP: PPD/MECHANICAL DEPARTMENT