REV	DESCRIPTION	DRAWN	DATE
		APPROVED	DATE

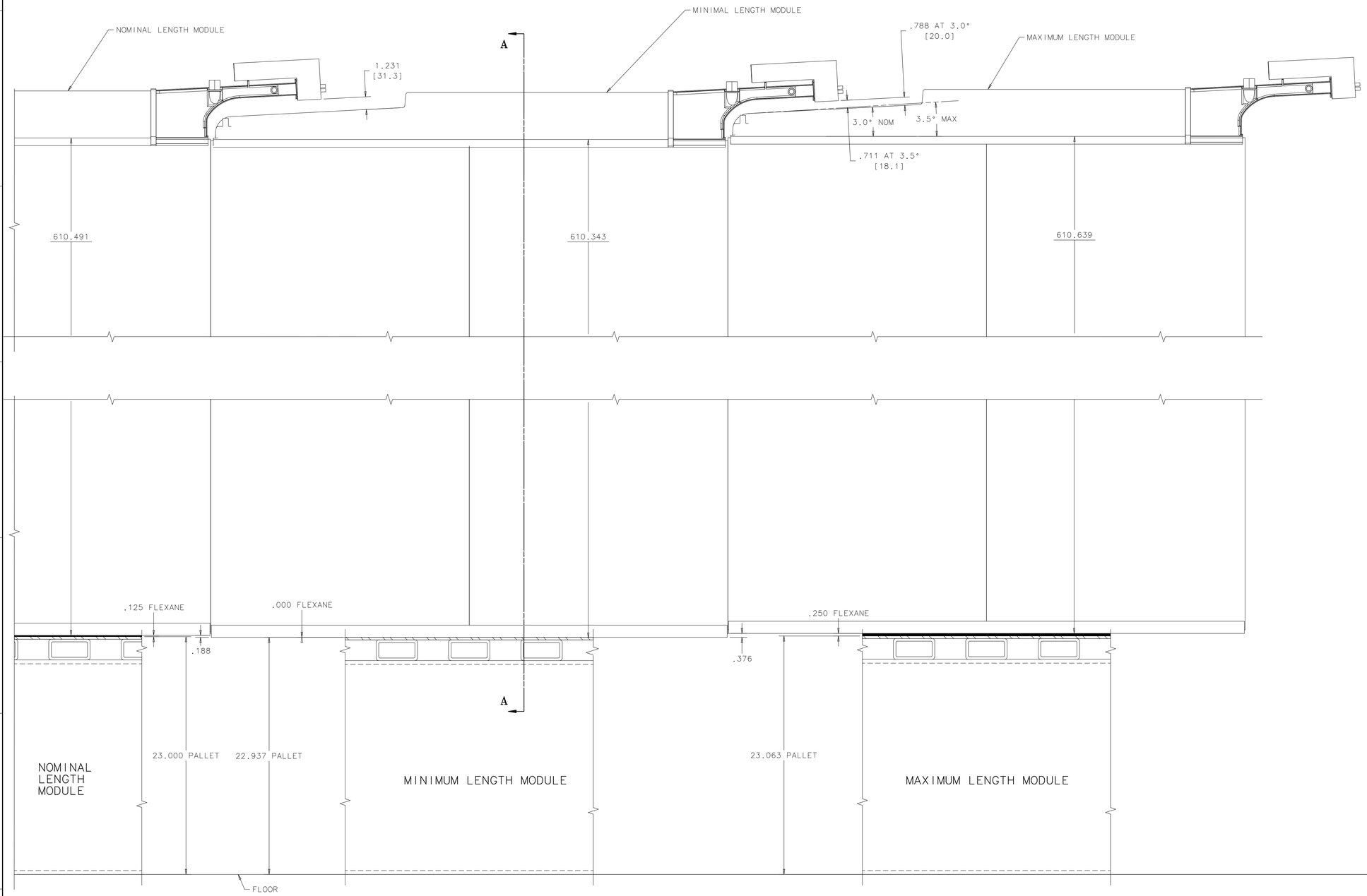

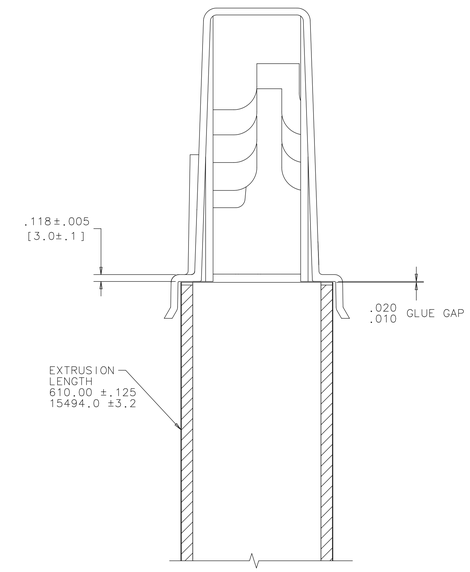

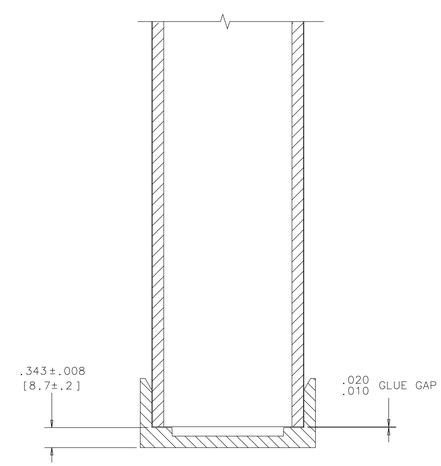

SECTION A–A
SCALE: 1:1

UNLESS OTHERWISE SPECIFIED	ORIGINATOR	D.FRIEND	17-DEC-2010
.XX .XXX ANGLES	DRAWN	D.FRIEND	17-DEC-2010
± --- ± --- ± ---	CHECKED		
1. BREAK ALL SHARP EDGES MAX.	APPROVED		
2. DO NOT SCALE DRAWING. 3. DIMENSIONS BASED UPON ASME Y14.5M-1994 4. MAX. ALL MACH. SURFACES	USED ON		
5. DRAWING UNITS: U.S. INCH	MATERIAL	SEE PARTS LIST ABOVE	

FERMI NATIONAL ACCELERATOR LABORATORY
UNITED STATES DEPARTMENT OF ENERGY

NOVA-FAR_DETECTOR
VERTICAL MODULE CLEARANCES
PART TOLERANCE STACKUP LAYOUT

SCALE	DRAWING NUMBER	SHEET	REV
1:2 & AS NOTED	3929.330-ME-486397	1 OF 1	

CREATED WITH : Ideas12NXSeries GROUP: PPD/MECHANICAL DEPARTMENT

Created: 11:05:12 on 17-12-10 (D-M-Y) By: friend State: 1-INITIAL