REV	DESCRIPTION	DRAWN	DATE
		APPROVED	DATE

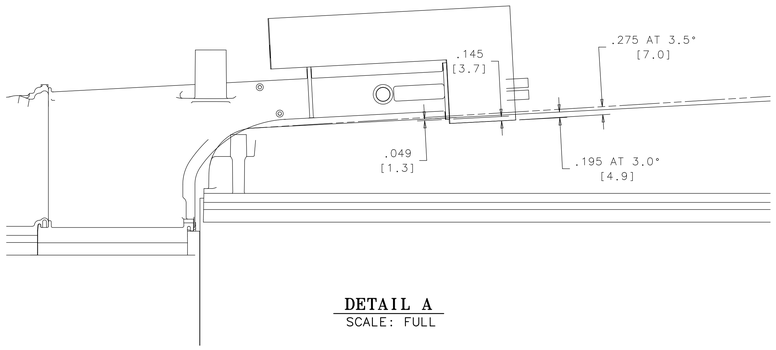

DETAIL A
SCALE: FULL

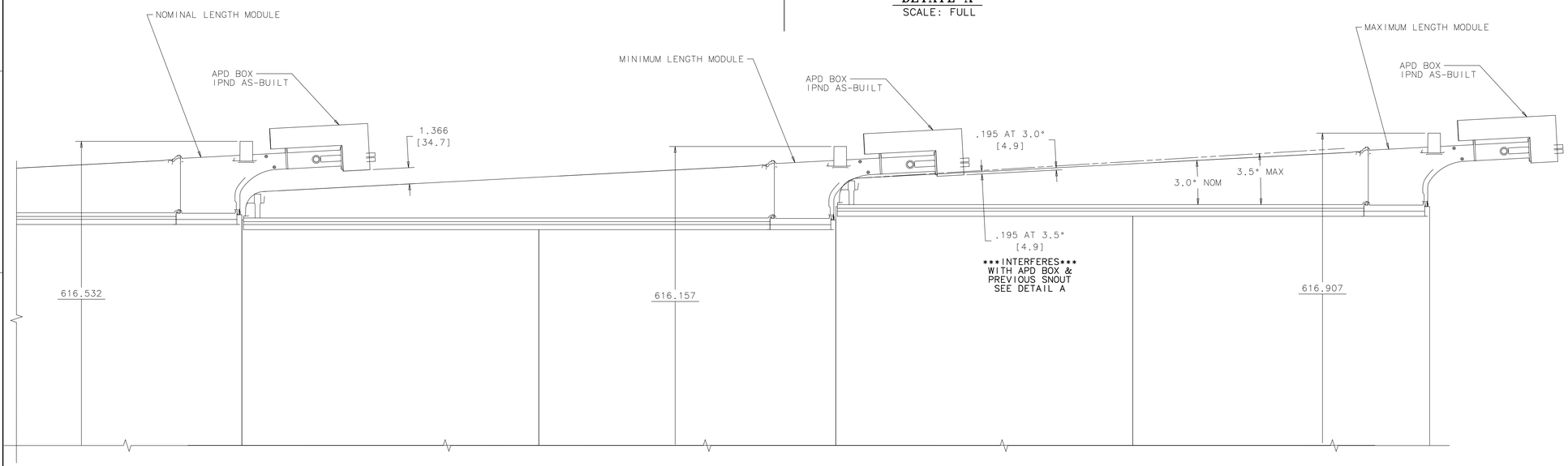

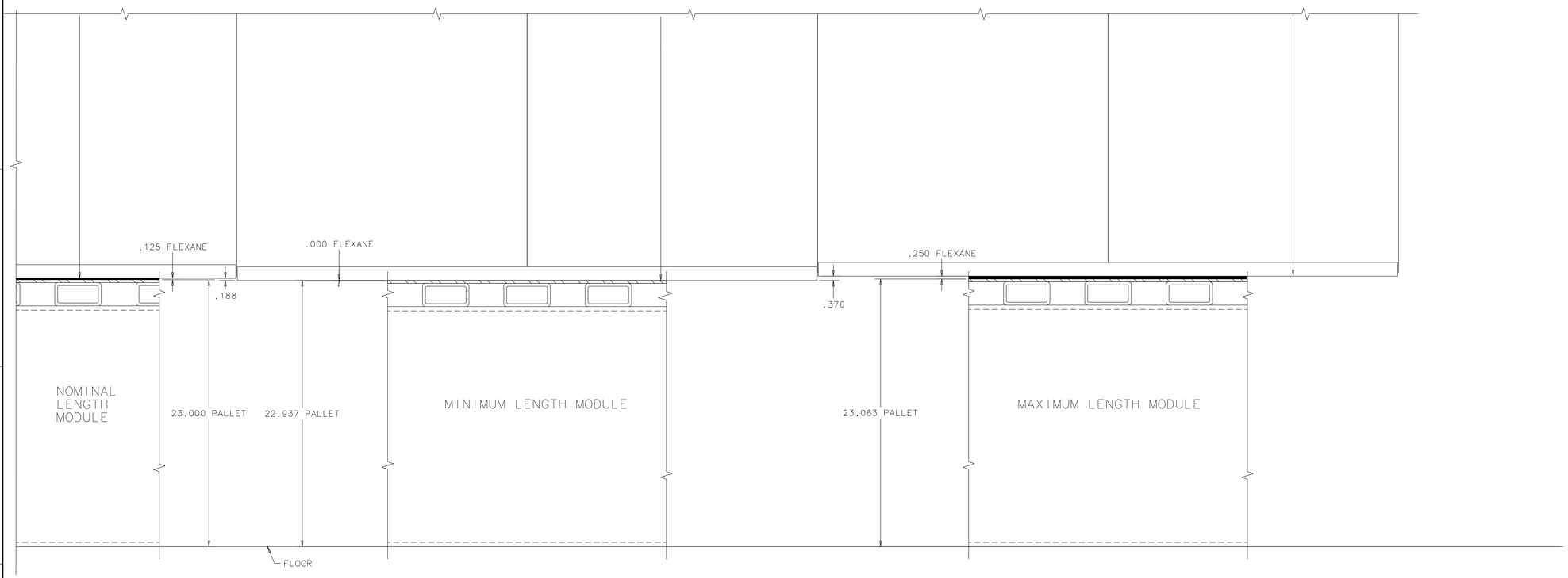

UNLESS OTHERWISE SPECIFIED			ORIGINATOR	D.FRIEND	08-DEC-2010
.XX	.XXX	ANGLES	DRAWN	D.FRIEND	08-DEC-2010
± ---	± ---	± ---	CHECKED		
			APPROVED		

1. BREAK ALL SHARP EDGES MAX.
2. DO NOT SCALE DRAWING.
3. DIMENSIONS BASED UPON ASME Y14.5M-1994
4. MAX. ALL MACH. SURFACES √
5. DRAWING UNITS: U.S. INCH

USED ON

MATERIAL

FERMI NATIONAL ACCELERATOR LABORATORY
UNITED STATES DEPARTMENT OF ENERGY

NOVA-FAR_DETECTOR
VERTICAL MODULE CLEARANCES
PROPOSED VERT MODULE STACKUP

SCALE	DRAWING NUMBER	SHEET	REV
1:2	3929.330-ME-486413	1 OF 1	

CREATED WITH : Ideas12NXSeries GROUP: PPD/MECHANICAL DEPARTMENT

Created: 13:33:48 on 08-12-10 (D-M-Y) By: friend State: 1-INITIAL