REV	DESCRIPTION	DRAWN	DATE
		APPROVED	DATE

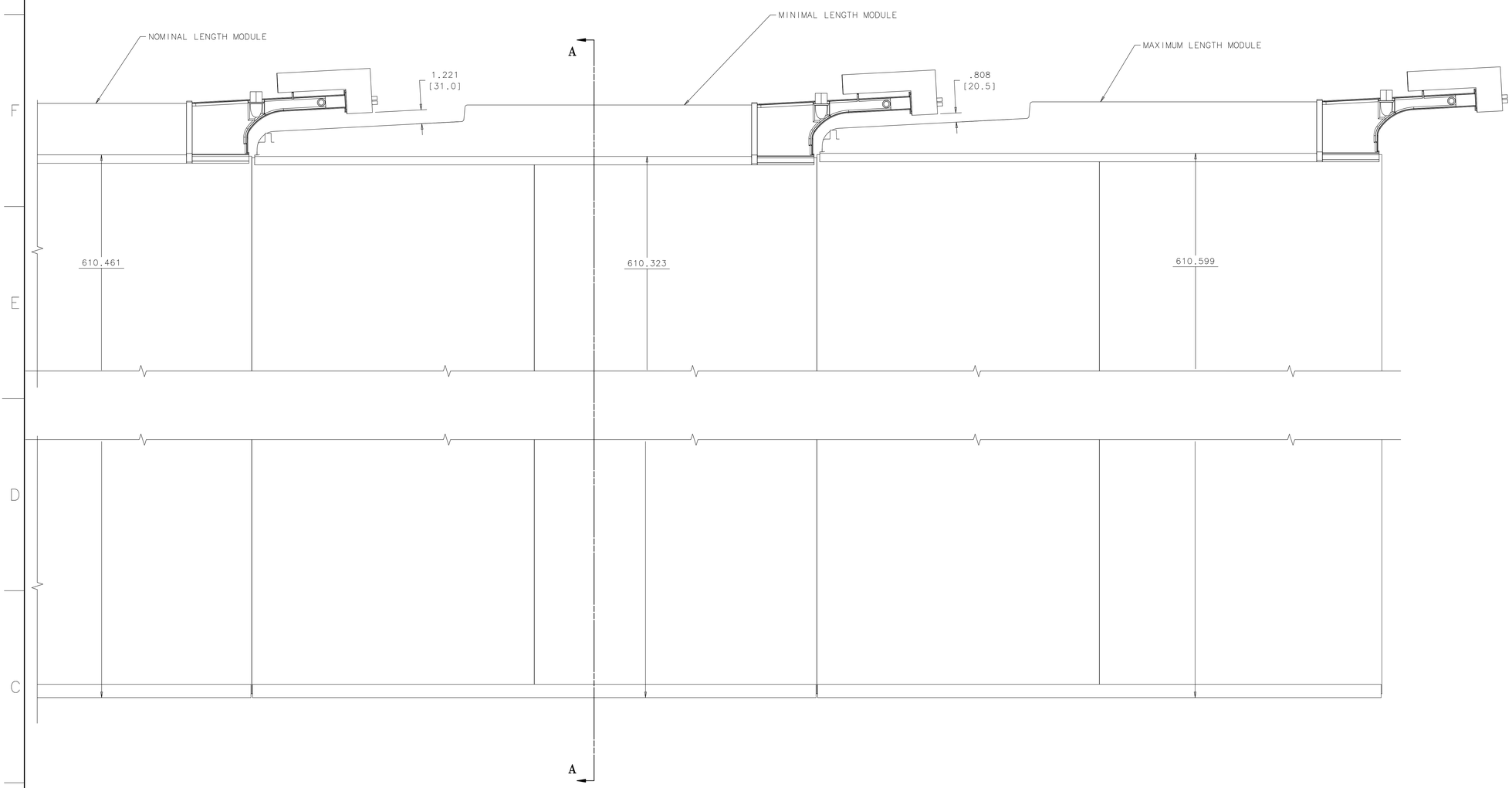

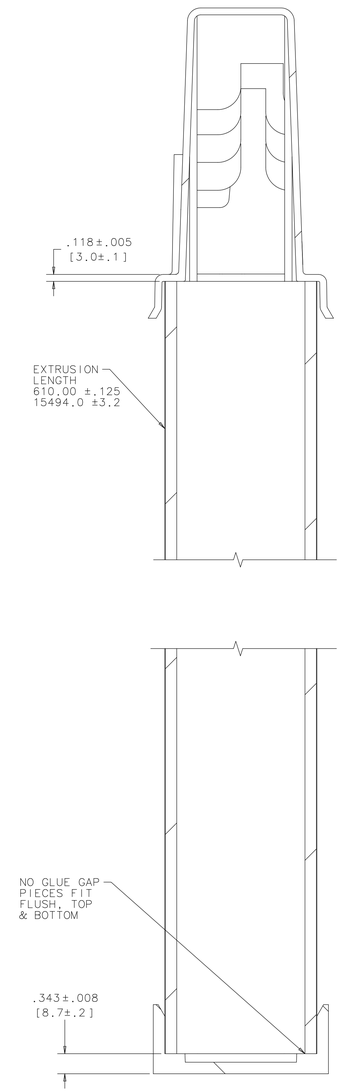

SECTION A–A

SCALE: 1:1

UNLESS OTHERWISE SPECIFIED			ORIGINATOR	D.FRIEND	15-NOV-2010
.XX	.XXX	ANGLES	DRAWN	D.FRIEND	15-NOV-2010
± ---	± ---	± ---	CHECKED		
1. BREAK ALL SHARP EDGES MAX.			APPROVED		
2. DO NOT SCALE DRAWING.			USED ON		
3. DIMENSIONS BASED UPON ASME Y14.5M-1994					
4. MAX. ALL MACH. SURFACES			MATERIAL	SEE PARTS LIST ABOVE	
5. DRAWING UNITS: U.S. INCH					

FERMI NATIONAL ACCELERATOR LABORATORY
UNITED STATES DEPARTMENT OF ENERGY

NOVA-FAR_DETECTOR
VERTICAL MODULE CLEARANCES
PART TOLERANCE STACKUP LAYOUT

SCALE	DRAWING NUMBER	SHEET	REV
1:2 & AS NOTED	3929.330-ME-486397	1 OF 1	

CREATED WITH : Ideas12NXSeries GROUP: PPD/MECHANICAL DEPARTMENT

Created: 14:27:13 on 15-11-10 (D-M-Y) By: friend State: 1-INITIAL