Fermilab

Particle Physics Division
Mechanical Department Engineering Note

Number: MD-ENG-245 Date: 15 July 2010

Project Internal Reference: Project 425 Task 1.6.4.5

Project: NOvA

Title: APD/TEC Water Cooling for IPND and Far Detector Hydraulic Calculations

Author(s): Dave Pushka

Reviewer(s):

Key Words: Piping System, APD – TEC Cooling System

Abstract Summary:

Hydraulic and Thermal calculations were prepared for both the IPND (integration prototype near detector) and the Far Detector. System curves were prepared for both systems for the water flow range of 2 to 8 ml per second through each of the TEC housings. Heat gain from ambient is also calculated.

Applicable Codes: Piping shall conform to ASME B31.3, Group D Service

FESHM 5031.1 Engineering note form is included below.

FESHM 5031.1 PIPING ENGINEERING NOTE FORM

Prepared by: Dave Pushka Preparation Date: 5-27-2010

Piping System Title: NOVA APD / TEC Cooling System

Lab Location: NOVA Near Detector Service Building Lab Location code: NDSB

Purpose of system / System description: Water Cooling system

Piping System ID Number: none assigned

Appropriate governing piping code: ASME B31.1 Category D

Fluid Service Category (if B31.3): Category-D / Normal / Category-M / High Pressure (circle one)

Fluid Contents: Water

Design Pressure: 50 psig Design Temperature: 50 F

Piping Materials: PVC (ASTM D1785, type 1120)

Drawing Numbers (PID's, weldments, etc.): 3929.500-ME-466929

Designer/Manufacturer: Fermilab / Various

Test Pressure: 50 psig Test Fluid: Water Test Date: TBD

Statements of Compliance

Piping system conforms to FESHM 5031.1, installation ***is not*** exceptional: Yes / No

Piping system conforms to FESHM 5031.1, installation ***is*** exceptional and has been designed, fabricated, inspected, and tested using sound engineering principles: Yes / No

Reviewed by: _____

(Print Name)

Signature: _____Date: _____

D/S Head's Signature: _____Date: _____

The following signatures are required for exceptional piping systems:

ES&H Director's Signature: _____Date: _____

Director's Signature or Designee: _____Date: _____

Pipe Characteristics

Size: Refer to P&ID Length: Refer to Drawings Volume: less than 100 gallons

Relief Valve Information

Type: not applicable, system open to atmosphere Manufacturer: not applicable

Set Pressure: not applicable Relief Capacity: not applicable

Relief Design Code: not applicable

Is the system designed to meet the identified governing code? Yes / No

Fabrication Quality Verification:

System Documentation

Process and Instrumentation diagram appended? Yes / No

Process and Instrumentation component list appended? Yes / No

Is an operating procedure necessary for safe operation? Yes / No
If 'yes', procedure must be appended.

Exceptional Piping System

Is the piping system or any part of it in the above category? Yes / No
If "Yes", follow the requirements for an extended engineering note for Exceptional Piping Systems.

Quality Assurance

List vendor(s) for assemblies welded/brazed off site:
Not applicable: not brazed or welded.

List welder(s) for assemblies welded/brazed in-house:
Not Applicable

Append welder qualification records for in-house welded/brazed assemblies.
Not Applicable

Append all quality verification records required by the identified code (e.g. examiner's certification, inspector's certification, test records, etc.)

Results of Calculations:

Figure 1, System Curve for the IPND system:

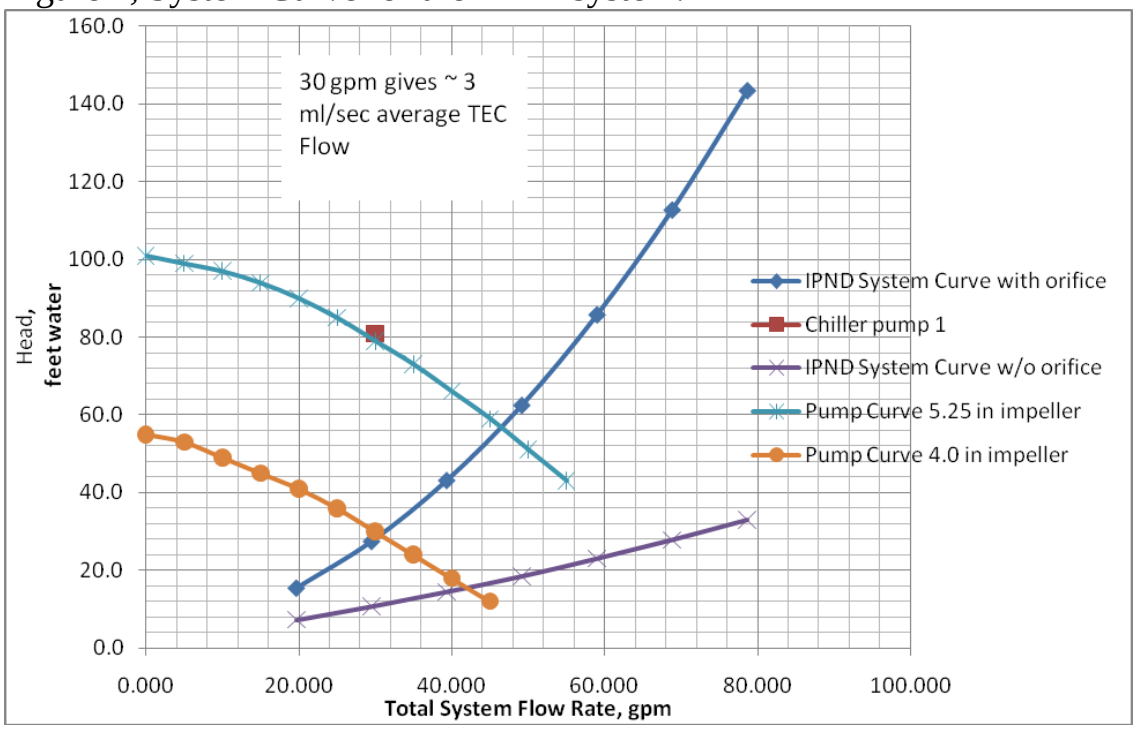

Figure 2, System Curve for the Far Detector System:

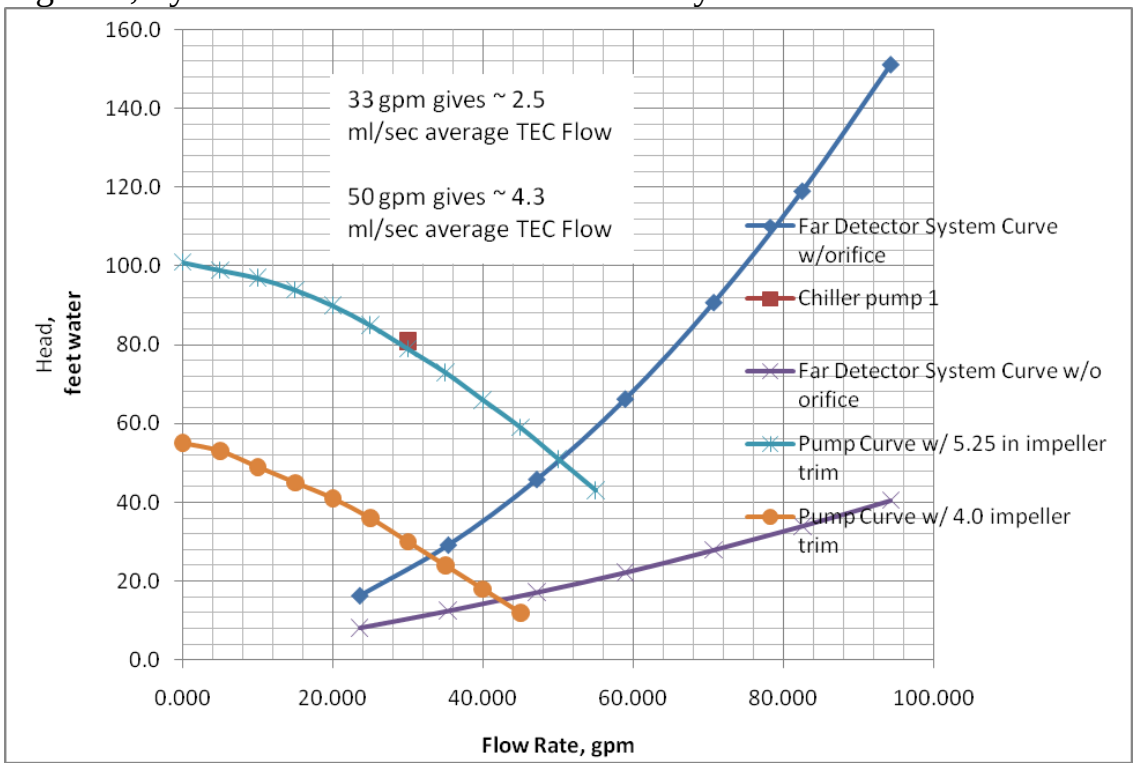

Figure 3, IPND System P&ID (Piping and Instrumentation Diagram):

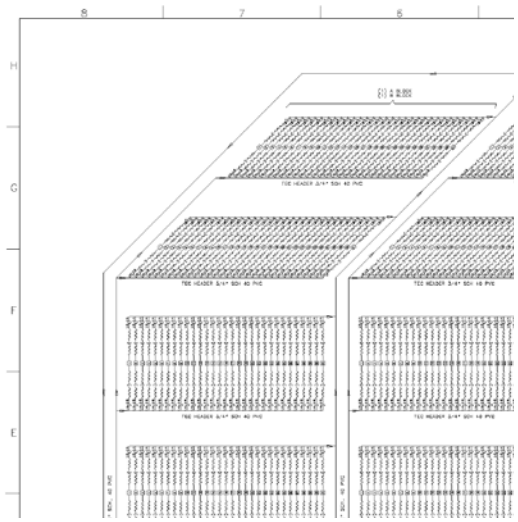

The IPND has six detector blocks and a small number of additional detector planes in the muon catcher portion of the detector. One chiller will service the entire IPND. Each block has either 74 or 76 TEC housings (depends if it is an “A” block or a “B” block. TEC housing counts for the IPND is 465 for the six blocks and 33 TEC housings for the muon catcher portion for a grand total of 498 TEC housings.

Figure 4, Far Detector System P&ID (Piping and Instrumentation Diagram):

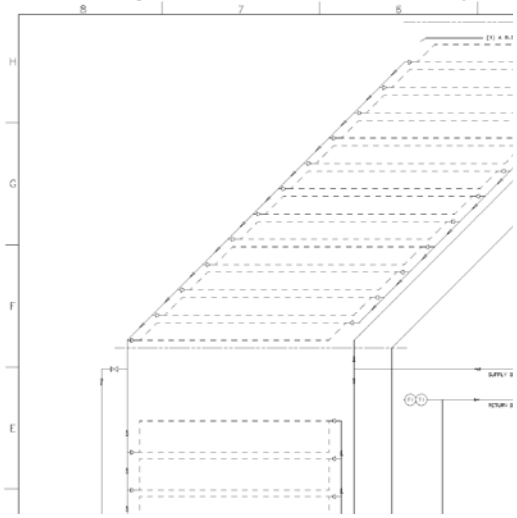

Drawing is numbers 3929.500-ME-466929 and 3929.500-ME-486095 are available electronically as a PDF at:

http://www-admscad.fnal.gov/MSDMain/cgi-bin/TP_PPDifind-web.pl

The Far detector has approximately 30 detector blocks. One chiller system will service 2 blocks, for a total of 744 TEC housings (362 TEC housing in one far detector block).

Figure 5, IPND System Heat Load Summary:

Summary of Heat Loads:			
Heat Load per TEC	3	Watts	
Number of TECs	497		497
TEC Heat Load	1491	Watts	
Heat Load from Pump	1119	Watts	based on 1.5 HP Motor
Heat Transfer Rate, Q, from TEC Hoses, w/o insulation	2,112	Watts	
Heat Transfer Rate, Q, from TEC Headers, w/o insulation	877	Watts	
Heat Transfer Rate, Q, from ROW Headers, w/o insulation	831	Watts	
Heat Transfer Rate, Q, from BLOCK Headers, w/o insulation	973	Watts	
Total Heat Load, w/o insulation	7,403	Watts	
Total Heat Load w/o insulation	2.11	Tons	
Heat Transfer Rate, Q, from TEC Hoses, with insulation	1288	Watts	
Heat Transfer Rate, Q, from TEC Headers, with insulation	444	Watts	
Heat Transfer Rate, Q, from ROW Headers, with insulation	401	Watts	
Heat Transfer Rate, Q, from BLOCK Headers, with insulation	461	Watts	
Total Heat Load, with insulation	5203	Watts	6329
Total Heat Load with insulation	1.48	Tons	
System Total Flow Rate from Above Calculations	19.7	gpm	from Row 26
System Total Flow Rate from Above Calculations	1.24	liters/second	
System Total Flow Rate from Above Calculations	1.24	kg/second	mass flow rate, m dot
C sub P for water	4.1926	kJ/kg-K	Cp
Bulk Water Temperature Rise From Chiller out to Chiller Return	1.00	C	Formula : Q = m dot * Cp * Delta T, solve for T
Bulk Water Temperature Rise From Chiller out to Chiller Return	1.81	F	

Figure 6, IPND Heat Source Graph:

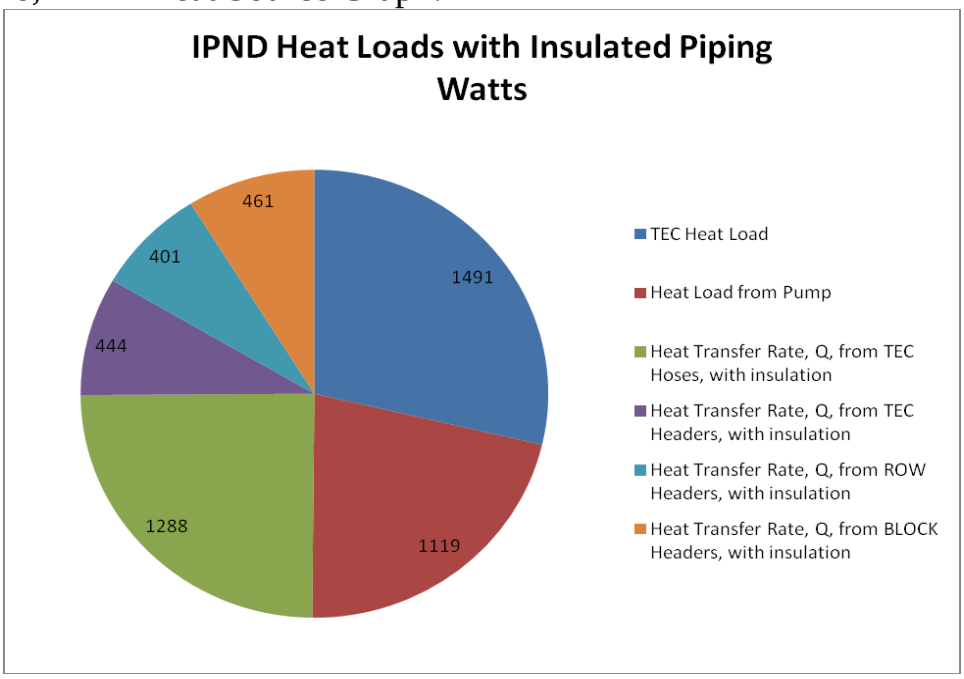

Figure 7, Far Detector System Heat Load Summary:

Summary of Heat Loads (Far Detector, FD):			Notes or Comments:
Heat Load per TEC	3	Watts	
Number of TECs	744		
TEC Heat Load	2232	Watts	
Heat Load from Pump	1119	Watts	based on 1.5 HP Motor
Heat Transfer Rate, Q, from TEC Hoses, w/o insulation	2,535	Watts	
Heat Transfer Rate, Q, from TEC Headers, w/o insulation	1,052	Watts	
Heat Transfer Rate, Q, from ROW Headers, w/o insulation	1,946	Watts	
Heat Transfer Rate, Q, from BLOCK Headers, w/o insulation	324	Watts	
Total Heat Load, w/o insulation	9,208	Watts	
Total Heat Load w/o insulation	2.62	Tons	
Heat Transfer Rate, Q, from TEC Hoses, with insulation	1545	Watts	
Heat Transfer Rate, Q, from TEC Headers, with insulation	532	Watts	
Heat Transfer Rate, Q, from ROW Headers, with insulation	923	Watts	
Heat Transfer Rate, Q, from BLOCK Headers, with insulation	154	Watts	
Total Heat Load, with insulation	6505	Watts	
Total Heat Load with insulation	1.85	Tons	
System Total Flow Rate from Above Calculations	23.6	gpm	from Row 26
System Total Flow Rate from Above Calculations	1.49	liters/second	
System Total Flow Rate from Above Calculations	1.48	kg/second	mass flow rate, m dot
C sub P for water	4.1926	kJ/kg-K	Cp
Bulk Water Temperature Rise From Chiller out to Chiller Return	1.05	C	Formula : Q = m dot * Cp * Delta T, solve for T
Bulk Water Temperature Rise From Chiller out to Chiller Return	1.88	F	

Figure 8, Far Detector Heat Load Graph:

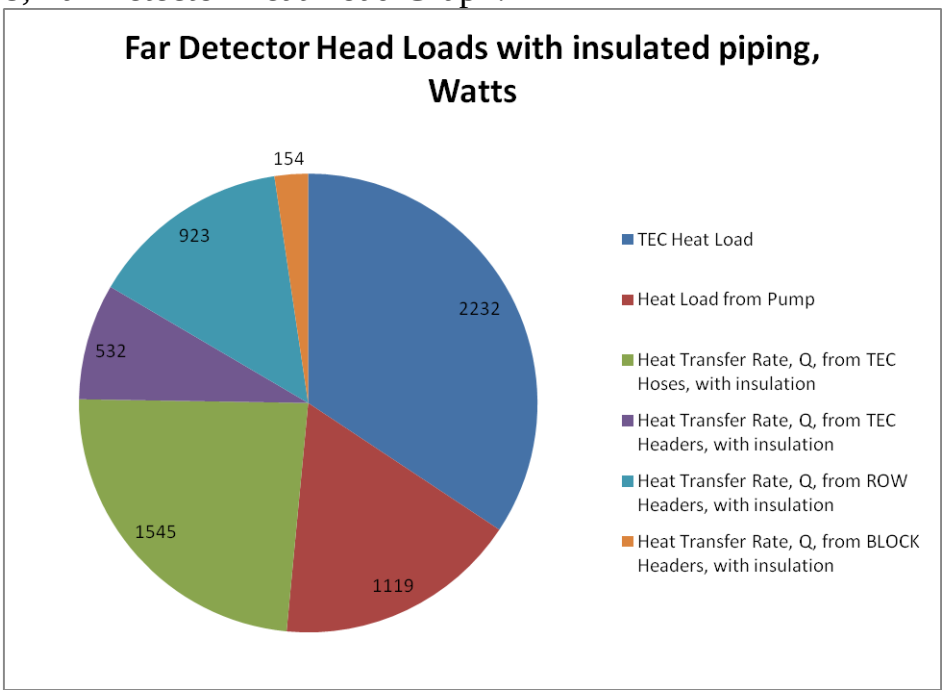

Discussion:

Work performed at Indiana University and the University of Minnesota has shown that the Thermo Electric Coolers (TECs) are sufficiently well cooled with 15 C water at a flow rate of 2 ml per second per TEC. So the system curves were generated for a flow range of 2 to 8 mL per second average flow rate. A minimum flow rate of 2 mL per second per housing is the design specification. Higher flow rates are acceptable, but use more pump energy.

The flow rate verses pressure drop for the TEC housing is based on measurements made by Bill Gilbert and Leon Mualem. Accuracy of these measurements has not been independently verified. Note that the TEC housings were intentionally fabricated with 0.030 inch diameter orifices on the hose fittings in order to place the bulk of the pressure drop across the TEC and result in very similar flows in each TEC. Even with a full flow filter and care in cleaning lines prior to assembly, the potential for plugging exists.

Chiller was specified and purchased by Bill Gilbert of the University of Minnesota. So these calculations are used to check the flow rate based on what was purchased, not to specify what to purchase. For the IPND System, the choice of pump for the chiller would better fit with a 4.0 inch impeller trim.

Sufficient net positive suction head is available and exceeds the value required based on the pump data sheet.

Temperature change across the loop is very small. For a system flow rate that results in an average TEC housing flow of 4 ml per second, the temperature change is only about one degree centigrade.

For both systems, the full pump energy is added to the heat load. This is conservative as the motors for these small pumps are typically not more than 82 to 84% efficient according to the NEMA MG1 Table 12-10. Pump is listed at 48% efficient near the operating point.

Chiller capacity is listed at 1.8 tons (6300 Watts) for cold water discharge at 10 C (50 F) and heat rejection at 35 C (95 F).

IPND System heat load with insulation on the piping is estimated at 1.48 tons (5200 Watts). IPND System heat load without insulation is estimated at 2.1 tons (9200 Watts). Doubling the insulation thickness from 1 centimeter to 2 centimeters reduces the heat load to 1.3 tons (4600 Watts).

Far Detector System heat load with insulation is estimated at 1.85 tons (6505 Watts). Far Detector System heat load without insulation is estimated at 2.6 tons (9208 Watts).

Line Sizes, IPND:

IPND Summaries:		
IPND Line Sizes:		
Hose, Pipe or Fitting I.d.	0.125	inch
Pipe Size for TEC header on block	0.75	nominal IP
Pipe Size for ROW header on block	1.5	nominal IP
Pipe Size for Block header on block	2	nominal IP

Line Sizes, Far Detector:

Far Detector Summaries:		
Far Detector Line Sizes:		
24 inch long hose (or Pipe) I.d.	0.125	inch
Pipe Size for TEC header on block	0.75	nominal IPS
Pipe Size for ROW header on block	2	nominal IPS
Pipe Size for Block header on block	2	nominal IPS

Line sizes for the IPND and the Far Detector are identical except for the ROW header. For the IPND, a 1.5 inch nominal pipe size is suitable while for the Far Detector, this line needs to be 2 inch nominal pipe size. This is only a difference of .48 inch diameter.

Instrument List (typical for IPND and FD):

IPND Valve and Instrument List:							
	Tag	Range	Units	Output	Make	Model	Description
		or Size					
Valves:							
	V-1	2	Inch IPS	n/a	NIBCO	4660-S (Schedule 40 PVC)	Manual Isolation Valve Filter Inlet
	V-2	2	Inch IPS	n/a	NIBCO	4660-S (Schedule 40 PVC)	Manual Isolation Valve Filter Outlet
	V-3	2	Inch IPS	n/a	NIBCO	4660-S (Schedule 40 PVC)	Manual Isolation Valve Filter By-Pass
	V-4	3/4	Inch IPS	n/a	NIBCO	4660-S (Schedule 40 PVC)	Manual Isolation Valve Filter Drain
	V-5	2	Inch IPS	n/a	NIBCO	4660-S (Schedule 40 PVC)	Manual Isolation Valve ROW Header One Supply
	V-6	2	Inch IPS	n/a	NIBCO	4660-S (Schedule 40 PVC)	Manual Isolation Valve ROW Header One Return
	V-7	2	Inch IPS	n/a	NIBCO	4660-S (Schedule 40 PVC)	Manual Isolation Valve ROW Header Two Supply
	V-8	2	Inch IPS	n/a	NIBCO	4660-S (Schedule 40 PVC)	Manual Isolation Valve ROW Header Two Return
	V-9	2	Inch IPS	n/a	NIBCO	4660-S (Schedule 40 PVC)	Manual Isolation Valve ROW Header Three Supply
	V-10	2	Inch IPS	n/a	NIBCO	4660-S (Schedule 40 PVC)	Manual Isolation Valve ROW Header Three Return
	V-11	2	Inch IPS	n/a	NIBCO	4660-S (Schedule 40 PVC)	Manual Isolation Valve ROW Header Four Supply
	V-12	2	Inch IPS	n/a	NIBCO	4660-S (Schedule 40 PVC)	Manual Isolation Valve ROW Header Four Return
Pressure Instruments							
	PI-1	0-60	psi	n/a	Ashcroft	Part # 25-1009AWL02L 0 - 60 psi	Filter Inlet Pressure
	PI-2	0-60	psi	n/a	Ashcroft	Part # 25-1009AWL02L 0 - 60 psi	Filter Outlet Pressure
	PI-3	0-60	psi	n/a	Ashcroft	Part # 25-1009AWL02L 0 - 60 psi	Block Header Supply Pressure
Temperature Instruments							
	TI-1	-20 to 120	F	n/a	Ashcroft	Part # 50EL60E040 -20/120	Supply (Chiller outlet) Temperature
	TI-2	-20 to 120	F	n/a	Ashcroft	Part # 50EL60E040 -20/120	Return (Chiller inlet) Temperature
Flow Instruments							
	FI-1	6 to 60	gpm	n/a	King Instrument	7200 Series, Order Number 0231	2 inch FNPT connections, Block Header (total system) Flow
	FI-2	3 to 21	gpm	n/a	King Instrument	7200 Series, Order Number 0181	1 inch FNPT connections, Row Header (di-block) Flow
	FI-3	3 to 21	gpm	n/a	King Instrument	7200 Series, Order Number 0181	1 inch FNPT connections, Row Header (di-block) Flow
	FI-4	3 to 21	gpm	n/a	King Instrument	7200 Series, Order Number 0181	1 inch FNPT connections, Row Header (di-block) Flow
	FI-5	3 to 21	gpm	n/a	King Instrument	7200 Series, Order Number 0181	1 inch FNPT connections, Row Header (di-block) Flow

Piping Temperature:

ASME B31.3 lists an operating temperature of PVC pipe at 100 F. This pipe will be used at approximately 50 F. To verify the adequacy of this material at the operating temperature, the manufacture was contacted and a reference with a graph of impact strength of this PVC piping material as a function of temperature are added to the end of this engineering note. The graph shows that at the operating point, the impact strength has fallen, but is still above the knee of the curve. Since this closed loop system is not apt to impart shock loads to the piping, and since the code required minimum material thickness is substantially thinner than the commercial pipe wall thickness, this material is acceptable for use at 50 F.

B31.3 Piping Code Calculations:

Hydraulic Data for Pipe:						
Nominal Size	Schedule	i.d.	o.d	Absolute Roughness	Relative Roughness	Friction Factor For Full Turb
1/10	n/a	0.075	0.312	0.000015	0.00240000	0.038
1/9	n/a	0.125	0.312	0.000015	0.00144000	0.034
1/8	40	0.269	0.405	0.000015	0.00066914	0.034
1/4	40	0.364	0.54	0.000015	0.00049451	0.029
3/8	40	0.493	0.675	0.000015	0.00036511	0.028
1/2	40	0.622	0.84	0.000015	0.00028939	0.027
3/4	40	0.824	1.05	0.000015	0.00021845	0.025
1	40	1.049	1.315	0.000015	0.00017159	0.023
1 1/4	40	1.38	1.66	0.000015	0.00013043	0.022
1 1/2	40	1.61	1.9	0.000015	0.00011180	0.021
2	40	2.067	2.375	0.000015	0.00008708	0.019
2 1/2	40	2.469	2.875	0.000015	0.00007290	0.018
3	40	3.068	3.5	0.000015	0.00005867	0.0175
Maximum Anticipated System Pressure:						
Pump shut in pressure	101	feet	based on a 5.25 inch diameter impeller on the chiller pump			
Pump shut in pressure	43.7	psi	conversion to psi			
Open Reservior Pressure	0	psi	this system does not have a pressurized expansion tank			
Maximum Anticipated System Pressure :	43.7					
Maximum Material Temperature	100	F	based on chiller off during a 100 degree F summer day.			
Minimum Material Temperature	32	F	based on chiller controls malfunction			
Normal Material Temperature	50	F				
Pipe Material Selection:						
Standard PVC pressure pipe spec:	ASTM D-1785 Class 1120					
Recommended Minimum Temperature	73	F	per table B-1 in ASME B31.3- 2008 edition			
Maximum Material Temperature	140	F	per manufacture's data sheet.			
Maximum Allowable Working Pressure	140	psi	per both Manufacture's data sheet and ASME B31. Table B-1 at 73 F.			
ASME CODE CALCULATIONS FOR PIPING:						
Internal Gage Pressure	P	50	psi	set by system pressure		
Design Stress Limit for PVC	S	2000	psi	For D1785 Type 1120 PVC Material per ASME B31.3 Table B-1		
Pressure-Thickness Calculations per ASME B31.3, Chapter VII:						
Nominal Size	Schedule	i.d.	o.d	Min. Thickness	Is t > t required?	
				Required, eqn 26a		
1/8	40	0.269	0.405	0.005	OK	
1/4	40	0.364	0.54	0.007	OK	
3/8	40	0.493	0.675	0.008	OK	
1/2	40	0.622	0.84	0.010	OK	
3/4	40	0.824	1.05	0.013	OK	
1	40	1.049	1.315	0.016	OK	
1 1/4	40	1.38	1.66	0.020	OK	
1 1/2	40	1.61	1.9	0.023	OK	
2	40	2.067	2.375	0.029	OK	
2 1/2	40	2.469	2.875	0.035	OK	
3	40	3.068	3.5	0.043	OK	
Conclusion: For all sized considered, the wall thickness of schedule 40 pipe is sufficient for the design pressure.						

Piping Thermal Expansion:

For the IPND, the maximum linear dimension of the piping network is 50 feet. The assumed installed temperature is 80 F and the minimum temperature during a chiller malfunction is assumed to be 32 F. Therefore the differential temperature is approximately 50 F.

Coefficient of thermal expansion for PVC pipe in this temperature range is 28 x 10-6 in/in-F in the engineering's tool box at:
http://www.engineeringtoolbox.com/linear-expansion-coefficients-d_95.html

For a run of 50 feet (600 inches) and a temperature change of 50 F, the length change is 0.84 inches. Pipe supports will allow such motion. Note that all the TEC coolers are connected with 2 foot long, 1/8 inch inner diameter, flexible rubber hoses, so this movement will not affect the detector.

Piping Code Conformance:

The following page lists the ASME B31.3 Calculations. The piping is listed for a maximum allowable working pressure (MAWP) of 140 psi and that the shut in pressure of the pump is only 43.7 psig.

Also note that the pump cannot be isolated (valved off) from the expansion tank. So if the pump were run is a shut in mode, the thermal expansion of the water would simply increase the water level in the expansion tank.

IPND System Volume Calculations:

IPND Volume Summaries:		
24 inch hose volume		
Combined Length of Supply and Return hoses	4	feet
Number of TEC / Housings per TEC Header	31	
Internal area	0.0122718	square incl
24 inch hose volume	18.260507	in3
24 inch hose volume	0.0790498	gallons
TEC Header Volume		
Combined Length of supply and return TEC headers on block	15	feet
Number of TEC Headers per Row Header	5	
Internal area	0.5332665	square incl
TEC Header Volume	479.93985	in3
TEC Header Volume	2.0776617	gallons
ROW Header Volume		
Combined Length of supply and return ROW headers on block	40	feet
Number of Row Headers per Block Header	4	
Internal area	2.0358306	square incl
ROW Header Volume	3908.7947	in3
ROW Header Volume	16.921189	gallons
Block Header Volume		
Combined Length of Block supply and return headers on Detector	150	feet
Number of Block Headers	1	
Internal area	3.355605	square incl
Block Header Volume	6040.089	in3
Block Header Volume	26.147572	gallons
Total Piping Volume	45.225472	gallons

Far Detector System Volume Calculations:

Far Detector Volume Summaries:		
24 inch hose volume		
Length of hose	4	feet
Number of TEC / Housings per TEC Header	31	
Internal area	0.0122718	square inch
24 inch hose volume	18.260507	in3
24 inch hose volume	0.0790498	gallons
TEC Header Volume		
Length of header on block	14	feet
Number of TEC Headers per Row Header	24	
Internal area	0.5332665	square inch
TEC Header Volume	2150.1305	in3
TEC Header Volume	9.3079244	gallons
ROW Header Volume		
Length of Row header on block	20	feet
Number of Row Headers per Block Header	1	
Internal area	3.355605	square inch
ROW Header Volume	805.3452	in3
ROW Header Volume	3.4863429	gallons
Block Header Volume		
Length of Block header on Detector	50	feet
Number of Block Headers	1	
Internal area	3.355605	square inch
Block Header Volume	2013.363	in3
Block Header Volume	8.7158572	gallons
Total Piping Volume	21.589174	gallons

IPND Net Positive Suction Head Calculations:

PUMP Net Positive Suction Head Available, NPSHA:			
Barometric Pressure, minimum at sight,	28.7	in hg	estimated for 750 feet mean sea level
Barometric Pressure, minimum at sight,	14.09744	psi	unit conversion
Gauge Pressure of open reservior,	0	psi	open reservior = 0 by defination
Vapor Pressure of water at 60 F (start-up conditions)	0.26	psi	from Burkes Pump Engineering Date
Specific Gravity of water at 60 F	0.999		from Burkes Pump Engineering Date
Static Height of reservior surface above pump inlet centerline	2	feet	estimated
Head Loss in the pump Suction Piping	3	feet	estimated
PUMP Net Positive Suction Head Available, NPSHA:	31.0	feet	
Pump Net Positive Suction Head Required, NPSHR:	10	feet	from Scot Pump Data Sheet for 50 gpm
Does NPSHA > NPSHR?	Okay		

PVC Pipe Manufacture Email Confirming Material is Suitable for the 50 F service temperature:

Dave Pushka

From: "Mai Huynh" <MaiHuynh@JMEagle.com>
To: "Dave Pushka" <pushka@fnal.gov>
Cc: "Murat Uslu" <MuratUslu@JMEagle.com>
Sent: Friday, May 21, 2010 8:58 PM
Subject: RE: Use of ASTM D-1785, class 1120 PVC pipe at 50 F

Mr. Pushka,
Thank you for your interesting in using PVC piping material with chilled water project. The PVC 1120 material designation code for pressure rated pipe, and the pressure rating of pipe was calculated at 73 degree F so when a piping system operating above that temperature then that pipe pressure rating will be dropped a little bit it depends on how high the temperature above 73 degree F. However if the pipe line operates at 50 degree F there should be no effect to the pipe line operating pressure.

Mai P Huynh
Quality Assurance Manager
JM Eagle
5200 West Century Blvd
Los Angeles, CA 90045
Tel. (310) 693 8200 Ext. 7302
Fax (310) 693 8230

-----Original Message-----
From: Dave Pushka [mailto:pushka@fnal.gov]
Sent: Friday, May 21, 2010 9:07 AM
To: - JMPlumbing; - JMWebSupport1
Subject: Use of ASTM D-1785, class 1120 PVC pipe at 50 F

Hello,

I am investigating using your PVC piping material with chilled water at 50 F and 50 psi. Unfortunately, ASME B31.3 Table B-1 lists the recommended minimum operating temperature at 73 F. I've not found on-line literature which provides a minimum temperature recommendation. But there are many installations operating at temperatures below 73 F that appear to operate satisfactory.

Can you provide any documentation to indicate that your plumbing material meeting ASTM D-1785, class 1120 is suitable for operation at 50 F and 50 psi?

Thanks
Dave Pushka, PE
Fermilab
Batavia, IL 60510
630-840-8767

The Madison Group
505 S. Rosa Rd., Ste. 124
Madison, WI 53719
(608)231-1907; (608)231-2694 fx
info@madisongroup.com

Failure Analysis of a PVC Pipe

** The links on this page will take you to our new website **

Home	Engineering	Failure	About Us	Contact Us

Note: the following analysis and its write-up are property of The Madison Group and cannot be copied and/or distributed in anyway without prior permission from The Madison Group. This analysis in no way suggests that any or all plastic pipe failures occur in the manner described. Each plastic failure is unique and should be treated as such.

Plastic pipe, tubing and other profiles are an extremely popular alternative to copper, steel, aluminum and other materials. In fact, by 2003 it is predicted that 33% of all US pipe production will be made with plastic. Plastic pipes, tubing and profiles are used in a wide variety of industries including, building & construction, automotive, consumer goods, lawn & garden, windows & doors, furniture, plumbing and electrical. One of the most widely used materials for these products is polyvinylchloride or commonly known as PVC. This material is popular in these industries because of the wide range of properties that can be obtain depending on the additives that are mixed with it. PVC can be made to have high strength, rigidity and hardness; good electrical properties; high chemical resistance and be self extinguishing - all this at a relatively inexpensive price. However, depending if a plasticizer additive is used with the PVC, along with what kind and how much, the characteristics of the final part can be dramatically altered to have high impact strength with relatively low hardness and rigidity.

An unplasticized PVC pipe, shown above, is quite rigid with high strength and good chemical resistance. These properties make it attractive for use in above or below ground plumbing applications. However, a very important change in property occurs as the temperature gets colder - the impact strength of PVC drastically changes for the worse. This means that at low temperatures the ability of PVC to dissipate the energy from a sudden blow is limited and may result in part failure. The best way to describe this phenomenon, apart from demonstrating the impact of several PVC pipes at different temperatures, is to graph the impact strength of PVC as a function of temperature, shown in the figure below.

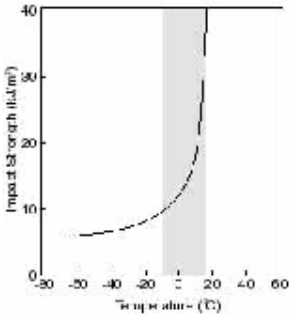

The most interesting part of this graph, the area that can explain many plastic failures, is boxed out in gray. Here, you will see a dramatic decrease in impact strength as the temperature gets colder - the part is becoming increasingly more brittle. The impact strength is 4x less at -10ºC than at 20ºC - a temperature range that is easily experienced in many regions of the US. This phenomenon is one that is not seen with every day metals and is commonly overlooked when designing with plastics.

One can improve this situation by using additives, in this case a plasticizer, that ultimately moves the graph to the left and gives the part a high impact strength at a much lower temperature. However, the

gain in one property usually means the loss of other properties, in this case, the loss of stiffness. The figure below shows the modulus (stiffness) of PVC as a function of temperature (solid line). The dashed line indicates the temperature at which the modulus will decrease dramatically, approximately 50ºC for this PVC. For many uses, 50ºC is a temperature that the product would never experience, however, if an additive is used to increase the impact strength (as described above) then this graph will also move to the left lowering the temperature that the stiffness is lost.

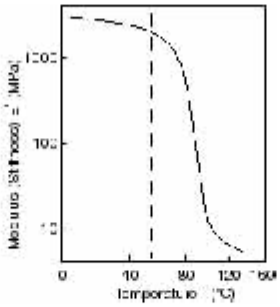

Thus, a comprise must be made for how much, if any, additive is to be used for the application and environment that the product will be used. In the case of PVC pipe, high mechanical strength, rigidity, hardness and high chemical resistance is required at the lowest cost. Plasticizing additives typically add to the cost of a product and are not use in pipe production. Other additives can reduce costs, such as, calcium carbonate. Unfortunately, these cost reducing additives typically make the product even more brittle causing the Impact Strength graph shown in the first graph to move to the right, making the product more brittle and more susceptible to failure.

An example of a failed PVC pipe is shown in the figure below.

To determine the cause of failure a variety of techniques can be used

- Visual Inspection of the Failed Part
- Structural Finite Element Analysis

- Dynamic Finite Element Analysis
- Material Evaluation
- Process Evaluation

A visual inspection of the part indicates that this was a brittle failure as opposed to a ductile failure. Many brittle failures occur very quickly, whereas, ductile failures will typically occur over a longer period of time. It was revealed that the pipe was in a cold condition of approximately -5.0ºC. The pipe was in an enviornment where the temperature was low enough that it became very brittle. A force, which could be caused by an external blow or from internal pipe pressure, became to great and the part failed catastrophically. The cause of failure may not be because the engineer specified the wrong pipe for the job or enviornment, but because of the formulation of the material or the processing conditions at the production plant were wrong.

To determine if the pipe had the correct formulation a wide variety of material tests can be performed. One such test is the thermogravimetric analyzer (TGA). This device is often used to identify the components of a plastic part. It works by gradually heating a small sample of the plastic to a very high temperature. At different temperatures the compounds of the plastic will decompose. The TGA accurately records the change of weight with respect to the temperature. The figure below shows an example of a TGA test on PVC sample. Here, the decomposition of the different compounds can be seen along with the percent weight lose. Using data from an extensive library, the decomposition peaks are matched with known materials to decompose at the same exact temperature.

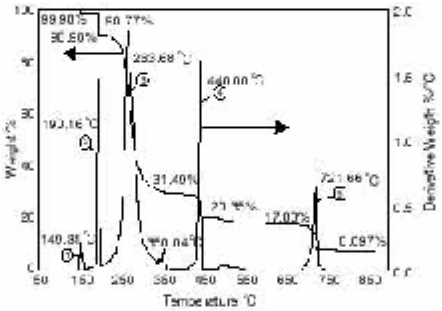

TGA Analysis of a PVC sample. (1) Volatiles: humidity, monomers, solvents (2) DOP plasticizer (3) HCl formation (4) carbonaceous residue (5) CO_2 formation

To establish the mode and forces of failure, along with providing confidence that a failure took place in the manner that was determined, a finite element analysis (FEA) can be made. This type of analysis allows the engineer to place the part in a realistic environment under normal to extreme conditions and observe what happens to the part - if failure occurs. The animation below shows the predict failure of a pipe caused by an extreme internal pressure using FEA.

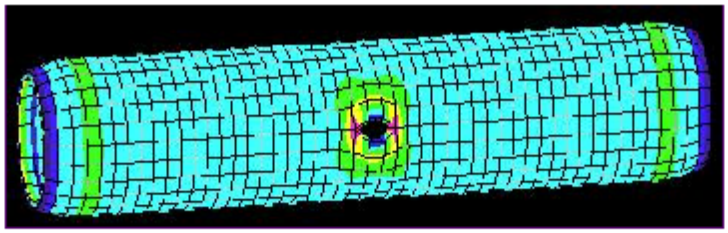

(click on figure to view FEA failure of animation - 340kB)

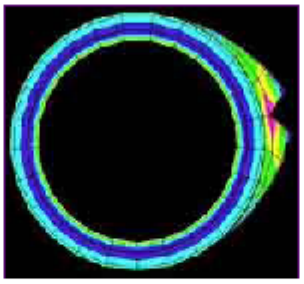

(click on figure to view FEA failure animation - 510kB)

** The links on this page will take you to our new website **

Home	Engineering	Failure	About Us	Contact Us

	A	B	C	D	E	F	G	H	I	J	K
1	**Basic Data and Design Parameters:**			Notes or Comments:	**IPND Simple Flow Calculations:**						
2	Absolute (dynamic) Viscosity of water at 60 F	1.1	centipoise								
3	Kinematic Viscosity of water at 60 F	1.1	centistokes								
4	density of water at 60 F	62.4	pounds per cubic foot								
5											
6	Minimum Goal TEC Housing Flow Rate	2	ml/second		2	3	4	5	6	7	8
7	Minimum Goal TEC Housing Flow Rate	0.002	liters/second		0.002	0.003	0.004	0.005	0.006	0.007	0.008
8	Minimum Goal TEC Housing Flow Rate	0.12	liters / minute		0.12	0.18	0.24	0.3	0.36	0.42	0.48
9	Minimum Goal TEC Housing Flow Rate	0.0317006	gallons / minute		0.032	0.048	0.063	0.079	0.095	0.111	0.127
10											
11											
12	TEC Flow Rate:	2	ml/second		2	3	4	5	6	7	8
13	TEC Housing Pressure Drop (with Orifice):	8.560	feet		8.560	17.494	30.001	46.080	65.737	88.965	115.767
14	TEC Housing Pressure Drop (Without Orifice):	0.325	feet		0.325	0.731	1.300	2.032	2.926	3.982	5.201
15	24 inch Hose Pressure Drop:	0.534	feet		0.418	0.627	0.888	1.162	1.774	2.415	3.154
16	TEC Header on Block Pressure Drop:	0.040	feet		0.040	0.091	0.161	0.252	0.363	0.494	0.645
17	ROW Header Pressure Drop:	0.074	feet		0.074	0.167	0.297	0.464	0.669	0.910	1.189
18	BLOCK to BLOCK Header Pressure Drop:	0.943	feet		0.943	0.943	0.943	0.943	0.943	0.943	0.943
19	Filter Pressure Drop:	2.725	feet		2.725	4.087	5.450	6.812	8.174	9.537	10.899
20	Heat Exchanger Pressure drop:	2.725	feet		2.725	4.087	5.450	6.812	8.174	9.537	10.899
21											
22	Sum of Pressure Drops (With Orifice)	6.752	psi		6.702	11.900	18.692	27.060	37.148	48.818	62.103
23	Sum of Pressure Drops (With Orifice)	15.6	feet		15.5	27.5	43.2	62.5	85.8	112.8	143.5
24	Sum of Pressure Drops (without Orifice)	3.188	psi		3.138	4.645	6.270	7.996	9.964	12.039	14.252
25	Sum of Pressure Drops (without Orifice)	7.366	feet		7.250	10.734	14.488	18.476	23.023	27.817	32.930
26	Total Flow Rate (System)	19.654	gpm		19.654	29.482	39.309	49.136	58.963	68.790	78.618
27	Total Flow Rate (System)	1179.3	gph		1179.3	1768.9	2358.5	2948.2	3537.8	4127.4	4717.1
28											
29	**TEC Housing Pressure Drop:**										
30	Minimum Goal TEC Housing Flow Rate	0.032	gallons / minute		0.032	0.048	0.063	0.079	0.095	0.111	0.127
31	Pressure drop for TEC Housing (from Mikes measurement)	0.141	psi		0.141	0.317	0.563	0.879	1.266	1.723	2.251
32	Pressure drop for TEC Housing (from Mikes measurement)	0.325	feet		0.325	0.731	1.300	2.032	2.926	3.982	5.201
33	Pressure drop for TEC Housing (Using Leons Orifice)	3.705	psi		3.705	7.571	12.984	19.943	28.450	38.503	50.103
34	Pressure drop for TEC Housing (using Leons Orifice)	8.560	feet		8.560	17.494	30.001	46.080	65.737	88.965	115.767
35											

	A	B	C	D	E	F	G	H	I	J	K
36	**24 inch Hose Pressure Drop:**			Notes or Comments:							
37	Minimum Flow Rate in a TEC Housing	0.0317006	gpm		0.032	0.048	0.063	0.079	0.095	0.111	0.127
38	Hose Size for TEC header on block (used in lookup table)	1/9		used in lookup table for pipe or hose dimensions.	1/9	1/9	1/9	1/9	1/9	1/9	1/9
39	Hose, Pipe or Fitting I.d.	0.125	inch		0.125	0.125	0.125	0.125	0.125	0.125	0.125
40	Pipe Friction Factor for fully turbulent flow	0.034			0.034	0.034	0.034	0.034	0.034	0.034	0.034
41	Reynolds Number for Hose	729		laminar	729	1,093	1,457	1,821	2,186	2,550	2,914
42	Internal area	0.0122718	square inches		0.012	0.012	0.012	0.012	0.012	0.012	0.012
43	Velocity	9.9453	inch/second		9.9453	14.9180	19.8906	24.8633	29.8360	34.8086	39.7813
44	Velocity	0.8288	feet / second		0.8288	1.2432	1.6576	2.0719	2.4863	2.9007	3.3151
45	Combined Length of Supply and Return hoses	4	feet		4	4	4	4	4	4	4
46	K (resistance coefficient)	13.056			13.056	13.056	13.056	13.056	13.056	13.056	13.056
47	K (resistance coefficient) for fittings from below	1.50			1.50	1.50	1.50	1.50	1.50	1.50	1.50
48	K (resistance coefficient) total	14.556			14.556	14.556	14.556	14.556	14.556	14.556	14.556
49	Pressure drop for Hose (turbulent flow)	0.0672596	psi	does not apply as Re < 2000	0.067	0.151	0.269	0.420	0.605	0.824	1.076
50	Pressure drop for Hose (turbulent flow)	0.1554099	feet	does not apply as Re < 2000	0.155	0.350	0.622	0.971	1.399	1.904	2.487
51	Pressure drop for hose (laminar flow)	0.1559708	psi	applies	0.156	0.234	0.312	0.390	0.468	0.546	0.624
52	Pressure drop for hose (laminar flow)	0.3603862	feet	applies	0.360	0.541	0.721	0.901	1.081	1.261	1.442
53	Use this Value for Pressure Drop on hose:	0.3603862	feet		0.360	0.541	0.721	0.901	1.399	1.904	2.487
54											
55	**24 inch Hose End Fittings Pressure Drop:**			Notes or Comments:							
56	Hose Size for TEC header on block (used in lookup table)	1/10		used in lookup table for pipe or hose dimensions.	1/10	1/10	1/10	1/10	1/10	1/10	1/10
57	Hose, Pipe or Fitting I.d.	0.075	inch		0.075	0.075	0.075	0.075	0.075	0.075	0.075
58	Pipe Friction Factor for fully turbulent flow	0.038			0.038	0.038	0.038	0.038	0.038	0.038	0.038
59	Reynolds Number	1,214		laminar	1,214	1,821	2,428	3,036	3,643	4,250	4,857
60	Internal area	0.0044179	square inches		0.004	0.004	0.004	0.004	0.004	0.004	0.004
61	Velocity	27.6259	inch/second		27.6259	41.4389	55.2518	69.0648	82.8777	96.6907	110.5036
62	Velocity	2.3022	feet / second		2.3022	3.4532	4.6043	5.7554	6.9065	8.0576	9.2086
63	Combined Length of hose end fitting for both hoses, both ends	0.25	feet		0.083	0.083	0.083	0.083	0.083	0.083	0.083
64	K (resistance coefficient)	1.52			0.507	0.507	0.507	0.507	0.507	0.507	0.507
65	K (resistance coefficient) for fittings from below	0.00			0.00	0.00	0.00	0.00	0.00	0.00	0.00
66	K (resistance coefficient) total	1.52			0.507	0.507	0.507	0.507	0.507	0.507	0.507
67	Pressure drop for Hose (turbulent flow)	0.0541939	psi	does not apply as Re < 2000	0.018	0.041	0.072	0.113	0.163	0.221	0.289
68	Pressure drop for Hose (turbulent flow)	0.1252205	feet	does not apply as Re < 2000	0.042	0.094	0.167	0.261	0.376	0.511	0.668
69	Pressure drop for hose (laminar flow)	0.0752174	psi	applies	0.025	0.038	0.050	0.063	0.075	0.088	0.100
70	Pressure drop for hose (laminar flow)	0.1737974	feet	applies	0.058	0.087	0.116	0.145	0.174	0.203	0.232
71	Use this Value for Pressure Drop on hose:	0.1737974	feet		0.058	0.087	0.167	0.261	0.376	0.511	0.668
72											
73	Use this Value for Pressure Drop on hose + end Fittings:	0.5341836	feet		0.418	0.627	0.888	1.162	1.774	2.415	3.154
74											
75											

	A	B	C	D	E	F	G	H	I	J	K
76	**IPND**			Notes or Comments:							
77	**TEC Header on Block Pressure Drop:**										
78	Number of TEC / Housings per TEC Header	31		(assumes services two blocks served by one TEC h	31	31	31	31	31	31	31
79	Minimum Flow Rate in a TEC Header	0.98272	gpm		0.983	1.474	1.965	2.457	2.948	3.440	3.931
80	Pipe Size for TEC header on block	3/4	nominal IPS		3/4	3/4	3/4	3/4	3/4	3/4	3/4
81	Pipe I.d.	0.824	inch		0.824	0.824	0.824	0.824	0.824	0.824	0.824
82	Pipe Friction Factor for fully turbulent flow	0.025			0.025	0.025	0.025	0.025	0.025	0.025	0.025
83	Reynolds Number for TEC Header	3,426		turbulent	3,426	5,139	6,852	8,565	10,278	11,991	13,704
84	Internal area	0.5332665	square inches		0.533	0.533	0.533	0.533	0.533	0.533	0.533
85	Velocity	7.0948993	inch/second		7.095	10.642	14.190	17.737	21.285	24.832	28.380
86	Velocity	0.5912416	feet / second		0.591	0.887	1.182	1.478	1.774	2.069	2.365
87	Combined Length of supply and return TEC headers on block	15	feet		15	15	15	15	15	15	15
88	K (resistance coefficient) for pipe	5.461165			5.461	5.461	5.461	5.461	5.461	5.461	5.461
89	K (resistance coefficient) for fittings from below	1.95			1.95	1.95	1.95	1.95	1.95	1.95	1.95
90	K (resistance coefficient) total	7.414165			7.414	7.414	7.414	7.414	7.414	7.414	7.414
91	Pressure drop for header on block (turbulent flow)	0.0174353	psi	applies	0.017	0.039	0.070	0.109	0.157	0.214	0.279
92	Pressure drop for header on block (turbulent flow)	0.0402859	feet	applies	0.040	0.091	0.161	0.252	0.363	0.494	0.645
93	Pressure drop for header on block (laminar flow)	0.0096021	psi	does not apply as Re > 2000	0.010	0.014	0.019	0.024	0.029	0.034	0.038
94	Pressure drop for header on block (laminar flow)	0.0221867	feet	does not apply as Re > 2000	0.022	0.033	0.044	0.055	0.067	0.078	0.089
95	Use this Value for Pressure Drop on header on block:	0.0402859	feet		0.040	0.091	0.161	0.252	0.363	0.494	0.645
96											
97	**ROW Header Pressure Drop:**			Notes or Comments:							
98	Number of TEC Headers per Row Header	5			5	5	5	5	5	5	5
99	Minimum Flow Rate in a ROW Header	4.914	gpm		4.914	7.370	9.827	12.284	14.741	17.198	19.654
100	Pipe Size for ROW header on block	1 1/2	nominal IPS		1 1/2	1 1/2	1 1/2	1 1/2	1 1/2	1 1/2	1 1/2
101	Pipe I.d.	1.61	inch		1.61	1.61	1.61	1.61	1.61	1.61	1.61
102	Pipe Friction Factor for fully turbulent flow	0.021			0.021	0.021	0.021	0.021	0.021	0.021	0.021
103	Reynolds Number for ROW Header	8,767		turbulent	8,767	13,151	17,535	21,918	26,302	30,686	35,069
104	Internal area	2.036	square inches		2.036	2.036	2.036	2.036	2.036	2.036	2.036
105	Velocity	9.292	inch/second		9.292	13.938	18.584	23.231	27.877	32.523	37.169
106	Velocity	0.774	feet / second		0.774	1.162	1.549	1.936	2.323	2.710	3.097
107	Combined Length of supply and return ROW headers on block	40	feet		40	40	40	40	40	40	40
108	K (resistance coefficient) for pipe	6.261			6.261	6.261	6.261	6.261	6.261	6.261	6.261
109	K (resistance coefficient) for fittings from below	1.71			1.71	1.71	1.71	1.71	1.71	1.71	1.71
110	K (resistance coefficient) total	7.971			7.971	7.971	7.971	7.971	7.971	7.971	7.971
111	Pressure drop for Row header (turbulent flow)	0.032	psi	applies	0.032	0.072	0.129	0.201	0.289	0.394	0.514
112	Pressure drop for Row header (turbulent flow)	0.074	feet	applies	0.074	0.167	0.297	0.464	0.669	0.910	1.189
113	Pressure drop for Row header (laminar flow)	0.009	psi	does not apply as Re > 2000	0.009	0.013	0.018	0.022	0.026	0.031	0.035
114	Pressure drop for Row header (laminar flow)	0.020	feet	does not apply as Re > 2000	0.020	0.030	0.041	0.051	0.061	0.071	0.081
115	Use this Value for Pressure Drop on Row header:	0.074	feet		0.074	0.167	0.297	0.464	0.669	0.910	1.189
116											
117											
118											

	A	B	C	D	E	F	G	H	I	J	K
119	**BLOCK to BLOCK Header Pressure Drop:**			Notes or Comments:							
120	Number of Row Headers per Block Header	4			4	4	4	4	4	4	4
121	Minimum Flow Rate in a ROW Header	19.654	gpm		19.654	29.482	39.309	49.136	58.963	68.790	78.618
122	Pipe Size for Block header on block	2	nominal IPS		2	2	2	2	2	2	2
123	Pipe I.d.	2.067	inch		2.067	2.067	2.067	2.067	2.067	2.067	2.067
124	Pipe Friction Factor for fully turbulent flow	0.019			0.019	0.019	0.019	0.019	0.019	0.019	0.019
125	Reynolds Number for BLOCK Header	27,316		turbulent	27,316	40,974	54,632	68,289	81,947	95,605	109,263
126	Internal area	3.356	square inches		3.356	3.356	3.356	3.356	3.356	3.356	3.356
127	Velocity	22.550	inch/second		22.550	33.825	45.100	56.375	67.650	78.926	90.201
128	Velocity	1.879	feet / second		1.879	2.819	3.758	4.698	5.638	6.577	7.517
129	Combined Length of Block supply and return headers on Detector	150	feet		150	150	150	150	150	150	150
130	K (resistance coefficient) for pipe	16.546			16.546	16.546	16.546	16.546	16.546	16.546	16.546
131	K (resistance coefficient) for fittings from below	0.627			0.627	0.627	0.627	0.627	0.627	0.627	0.627
132	K (resistance coefficient) total	17.173			17.173	17.173	17.173	17.173	17.173	17.173	17.173
133	Pressure drop for header on block (turbulent flow)	0.408	psi	applies	0.408	0.918	1.632	2.550	3.672	4.997	6.527
134	Pressure drop for header on block (turbulent flow)	0.943	feet	applies	0.943	2.121	3.770	5.891	8.484	11.547	15.082
135	Pressure drop for header on block (laminar flow)	0.049	psi	does not apply as Re > 2000	0.049	0.073	0.097	0.121	0.146	0.170	0.194
136	Pressure drop for header on block (laminar flow)	0.112	feet	does not apply as Re > 2000	0.112	0.168	0.224	0.280	0.336	0.392	0.448
137	Use this Value for Pressure Drop on Block to Block header:	0.943	feet		0.943	2.121	3.770	5.891	8.484	11.547	15.082
138											
139											
140											
141	**Fitting Pressure Drop, K values:**										
142	Tee, flow through branch From TEC Header to Hose	1.50		K = 60 f sub T							
143	Tee, flow through branch From Row Header to TEC Header	1.26		K = 60 f sub T							
144	Tee, flow through branch From Block Header to Row Header	1.14		K = 60 f sub T							
145	Elbow, 90 degree, on Row Header	0.63		K = 30 f sub T							
146	Elbow, 90 degree, on Block Header	0.57		K = 30 f sub T							
147	Ball valve, reduced port, on Row Header	0.06		K = 3 f sub T							
148	Ball valve, reduced port, on Block Header	0.06		K = 3 f sub T							
149											
150											
151											
152	**Pressure Drop, Filter, Heatexchanger:**										
153	Full Flow Filter for Jumbo Cartridge, 1 microm rating	1.179	psi	6 psi at 100 gpm linear	1.179	1.769	2.359	2.948	3.538	4.127	4.717
154	Heat Exchanger in the Chiller	1.179	psi	assume same as filter	1.179	1.769	2.359	2.948	3.538	4.127	4.717
155											
156											
157											
158	**PUMP Net Positive Suction Head Available, NPSHA:**										
159	Barometric Pressure, minimum at sight,	28.7	in hg	estimated for 750 feet mean sea level							
160	Barometric Pressure, minimum at sight,	14.09744	psi	unit conversion							
161	Gauge Pressure of open reservior,	0	psi	open reservior = 0 by defination							
162	Vapor Pressure of water at 60 F (start-up conditions)	0.26	psi	from Burkes Pump Engineering Date							
163	Specific Gravity of water at 60 F	0.999		from Burkes Pump Engineering Date							
164	Static Height of reservior surface above pump inlet centerline	2	feet	estimated							
165	Head Loss in the pump Suction Piping	3	feet	estimated							
166											
167	PUMP Net Positive Suction Head Available, NPSHA:	31.0	feet								
168	Pump Net Positive Suction Head Required, NPSHR:	10	feet	from Scot Pump Data Sheet for 50 gpm							
169	Does NPSHA > NPSHR?	Okay									
170											

	A	B	C	D		E	F	G	H	I	J	K
171												
172	**HEAT TRANSFER CALCULATIONS AND ENERGY BALANCE for IPND:**			Notes or Comments:								
173												
174	**Basic Input Parameters:**											
175	Nominal Supply Water Temperature	10	C		283	10	10	10	5	5	5	5
176	Nominal Ambient Air Temperature	35	C		308	20	25	30	20	25	30	35
177	Nominal Supply Water Temperature	50	F			50	50	50	41	41	41	41
178	Nominal Ambient Air Temperature	95	F			68	77	86	68	77	86	95
179												
180	Nominal Insulation Thickness	1	cm			1	1	1	1	1	1	1
181	Nominal Insulation Thermal Conductivity	0.035	W/m-K	from insulation cut sheet		0.035	0.035	0.035	0.035	0.035	0.035	0.035
182	Nominal PVC Pipe Material Thermal Conductivity	0.19	W/m-K	from engineering tool box value		0.19	0.19	0.19	0.19	0.19	0.19	0.19
183	Nominal external natural convection coefficient in free air, h2 below	5		estimated per Incropera & Dewitt, Table 1.1		5	5	5	5	5	5	5
184												
185	Prandt Number for Water at 280 K	10.26		from Incropera & Dewitt, Table A.6		10.26	10.26	10.26	10.26	10.26	10.26	10.26
186	Viscosity of Water at 280 K	1.42E-03	N*s/m2	from Incropera & Dewitt, Table A.6		1.42E-03	1.42E-03	1.42E-03	1.42E-03	1.42E-03	1.42E-03	1.42E-03
187	Thermal Conductivity of Water at 280K	0.582	W/m-K)	from Incropera & Dewitt, Table A.6		0.582	0.582	0.582	0.582	0.582	0.582	0.582
188	Specific Heat of Water at 280 K	4.198	kJ/kg-K	from Incropera & Dewitt, Table A.6								
189												
190	Prandt Number for Water at 283 K	9.39		interpolated from 280 and 285K data		9.39	9.39	9.39	9.39	9.39	9.39	9.39
191	Viscosity of Water at 283 K	1.30E-03	N*s/m2	interpolated from 280 and 285K data		1.30E-03	1.30E-03	1.30E-03	1.30E-03	1.30E-03	1.30E-03	1.30E-03
192	Thermal Conductivity of Water at 283K	0.5868	W/m-K)	interpolated from 280 and 285K data		0.5868	0.5868	0.5868	0.5868	0.5868	0.5868	0.5868
193	Specific Heat of Water at 280 K	4.1926	kJ/kg-K	interpolated from 280 and 285K data		0	0	0	0	0	0	0
194												
195	Prandt Number for Water at 285 K	8.81		from Incropera & Dewitt, Table A.6		8.81	8.81	8.81	8.81	8.81	8.81	8.81
196	Viscosity of Water at 285 K	1.23E-03	N*s/m2	from Incropera & Dewitt, Table A.6		1.23E-03	1.23E-03	1.23E-03	1.23E-03	1.23E-03	1.23E-03	1.23E-03
197	Thermal Conductivity of Water at 285 K	0.59	W/m-K)	from Incropera & Dewitt, Table A.6		0.59	0.59	0.59	0.59	0.59	0.59	0.59
198	Specific Heat of Water at 285 K	4.189	kJ/kg-K	from Incropera & Dewitt, Table A.6								
199												
200	Prandt Number for Water at 290 K	7.56		from Incropera & Dewitt, Table A.6		7.56	7.56	7.56	7.56	7.56	7.56	7.56
201	Viscosity of Water at 290 K	1.08E-03	N*s/m2	from Incropera & Dewitt, Table A.6		1.08E-03	1.08E-03	1.08E-03	1.08E-03	1.08E-03	1.08E-03	1.08E-03
202	Thermal Conductivity of Water at 290 K	0.598	W/m-K)	from Incropera & Dewitt, Table A.6		0.598	0.598	0.598	0.598	0.598	0.598	0.598
203	Specific Heat of Water at 290 K	4.184	kJ/kg-K	from Incropera & Dewitt, Table A.6								
204												
205	Prandt Number for Water at 295 K	6.62		from Incropera & Dewitt, Table A.6		6.62	6.62	6.62	6.62	6.62	6.62	6.62
206	Viscosity of Water at 295 K	9.59E-04	N*s/m2	from Incropera & Dewitt, Table A.6		9.59E-04	9.59E-04	9.59E-04	9.59E-04	9.59E-04	9.59E-04	9.59E-04
207	Thermal Conductivity of Water at 295 K	0.606	W/m-K)	from Incropera & Dewitt, Table A.6		0.606	0.606	0.606	0.606	0.606	0.606	0.606
208	Specific Heat of Water at 295 K	4.181	kJ/kg-K	from Incropera & Dewitt, Table A.6								
209												
210	Prandt Number for Water at 300 K	8.55E-04		from Incropera & Dewitt, Table A.6		8.55E-04	8.55E-04	8.55E-04	8.55E-04	8.55E-04	8.55E-04	8.55E-04
211	Viscosity of Water at 300 K	1.23E-03	N*s/m2	from Incropera & Dewitt, Table A.6		1.23E-03	1.23E-03	1.23E-03	1.23E-03	1.23E-03	1.23E-03	1.23E-03
212	Thermal Conductivity of Water at 300 K	0.613	W/m-K)	from Incropera & Dewitt, Table A.6		0.613	0.613	0.613	0.613	0.613	0.613	0.613
213	Specific Heat of Water at 300 K	4.179	kJ/kg-K	from Incropera & Dewitt, Table A.6								
214												
215												

	A	B	C	D	E	F	G	H	I	J	K
216											
217	**IPND:**										
218	Length of TEC HOSES	4	0		4	4	4	4	4	4	4
219	Length of TEC HOSES	1.2192	meters		1.2192	1.2192	1.2192	1.2192	1.2192	1.2192	1.2192
220	Number of TEC HOSES	620			620	620	620	620	620	620	620
221	Size of TEC Hoses	1/9	0		1/9	1/9	1/9	1/9	1/9	1/9	1/9
222	I.D. of TEC hoses	0.125	inches		0.125	0.125	0.125	0.125	0.125	0.125	0.125
223	O.D. of TEC hoses	0.312	inches		0.312	0.312	0.312	0.312	0.312	0.312	0.312
224	I.D. of TEC hoses	0.003175	meters		0.003	0.003	0.003	0.003	0.003	0.003	0.003
225	O.D. of TEC hoses	0.0079248	meters		0.008	0.008	0.008	0.008	0.008	0.008	0.008
226	Inside area of TEC Hoses	7.5398073	square meters		7.540	7.540	7.540	7.540	7.540	7.540	7.540
227	Outside area of TEC hoses	18.819359	square meters		18.819	18.819	18.819	18.819	18.819	18.819	18.819
228	Reynolds Number for Hose	728.53849		laminar	729	1,093	1,457	1,821	2,186	2,550	2,914
229	Nussult Number (Turbulent Flow)	9		Dittus-Boelter Eqn.	9	12	15	18	21	24	27
230	Nussult Number (Laminar Flow, constant surface temperature)	3.66		Incropera & Dewitt 2nd ed. formula 8.53	3.66	3.66	3.66	3.66	3.66	3.66	3.66
231	Use this value of the Nussult Number	3.66			3.7	3.7	3.7	3.7	3.7	23.9	26.6
232	Internal pipe convection coefficient, h = Nussult No * k / D	680.1	W/m2	value of h1 in below calculation	680.1	680.1	680.1	680.1	680.1	4444.8	4945.9
233											
234											
235	R, internal convection	0.0002	W/Deg C	equals 1/(h1*2*pi*r1*L)	0.0002	0.0002	0.0002	0.0002	0.0002	0.0000	0.0000
236	R, wall conduction	0.0010	W/Deg C	equals ln (r2/r1) /(2*pi*k of PVC*length of PCV pi	0.0010	0.0010	0.0010	0.0010	0.0010	0.0010	0.0010
237	R, External convection on bare pipe	0.0106	W/Deg C	equals 1/(h2*2*pi*r1*L)	0.0106	0.0106	0.0106	0.0106	0.0106	0.0106	0.0106
238	R, external insulation conduction	0.0076	W/Deg C	equals ln (r2/r1) /(2*pi*k of insulation*length of i	0.0076	0.0076	0.0076	0.0076	0.0076	0.0076	0.0076
239	R, External convection on insulation o.d.	0.0104	W/Deg C	equals 1/(h2*2*pi*r1*L)	0.0104	0.0103	0.0101	0.0100	0.0099	0.0098	0.0097
240											
241	Heat Transfer Rate, Q, from TEC Hoses, w/o insulation	2112	Watts	equals (Tambient - Tair)/Sum R (not including R ins	845	1267	1690	1267	1690	2142	2571
242	Heat Transfer Rate, Q, from TEC Hoses, with insulation	1288	Watts	equals (Tambient - Tair)/Sum R (including R insulat	515	773	1030	773	1030	1299	1559
243											
244											

	A	B	C	D	E	F	G	H	I	J	K
245											
246	**IPND:**										
247	Length of TEC Headers	15	feet		15	15	15	15	15	15	15
248	Length of TEC Headers	4.572	meters		4.572	4.572	4.572	4.572	4.572	4.572	4.572
249	Number of TEC Headers	20			20	20	20	20	20	20	20
250	Size of TEC Headers	3/4	nominal IPS		3/4	3/4	3/4	3/4	3/4	3/4	3/4
251	I.D. of TEC Headers	0.824	inches		0.824	0.824	0.824	0.824	0.824	0.824	0.824
252	O.D. of TEC Headers	1.05	inches		1.05	1.05	1.05	1.05	1.05	1.05	1.05
253	I.D. of TEC Headers	0.0209296	meters		0.021	0.021	0.021	0.021	0.021	0.021	0.021
254	O.D. of TEC Headers	0.02667	meters		0.027	0.027	0.027	0.027	0.027	0.027	0.027
255	Inside area of TEC Headers	6.0123883	square meters		6.012	6.012	6.012	6.012	6.012	6.012	6.012
256	Outside area of TEC headers	7.6614171	square meters		7.661	7.661	7.661	7.661	7.661	7.661	7.661
257	Reynolds Number for TEC Header	3426.076		turbulent	3,426	5,139	6,852	8,565	10,278	11,991	13,704
258	Nussult Number (Turbulent Flow)	30		Dittus-Boelter Eqn.	30	42	53	63	73	83	92
259	Nussult Number (Laminar Flow, constant surface temperature)	3.66		Incropera & Dewitt 2nd ed. formula 8.53	3.66	3.66	3.66	3.66	3.66	3.66	3.66
260	Use this value of the Nussult Number	30			30	42	53	63	73	83	92
261	Internal pipe convection coefficient, h = Nussult No * k / D	854	W/m2	value of h1 in below calculation	854	1181	1487	1777	2057	2327	2589
262											
263											
264	R, internal convection	0.0002	W/Deg C	equals 1/(h1*2*pi*r1*L)	0.0002	0.0001	0.0001	0.0001	0.0001	0.0001	0.0001
265	R, wall conduction	0.0022	W/Deg C	equals ln (r2/r1) /(2*pi*k of PVC*length of PCV pi	0.0022	0.0022	0.0022	0.0022	0.0022	0.0022	0.0022
266	R, External convection on bare pipe	0.0261	W/Deg C	equals 1/(h2*2*pi*r1*L)	0.0261	0.0261	0.0261	0.0261	0.0261	0.0261	0.0261
267	R, external insulation conduction	0.0278	W/Deg C	equals ln (r2/r1) /(2*pi*k of insulation*length of i	0.0278	0.0278	0.0278	0.0278	0.0278	0.0278	0.0278
268	R, External convection on insulation o.d.	0.0261	W/Deg C	equals 1/(h2*2*pi*r1*L)	0.0261	0.0261	0.0261	0.0261	0.0261	0.0261	0.0261
269											
270	Heat Transfer Rate, Q, from TEC Headers, w/o insulation	877	Watts	equals (Tambient - Tair)/Sum R (not including R ins	351	527	703	528	704	880	1057
271	Heat Transfer Rate, Q, from TEC Headers, with insulation	444	Watts	equals (Tambient - Tair)/Sum R (including R insulat	177	266	355	267	356	445	534
272											
273											

	A	B	C	D	E	F	G	H	I	J	K
274											
275	**IPND:**										
276	Length of ROW Headers	40	feet		40	40	40	40	40	40	40
277	Length of ROW Headers	12.192	meters		12.192	12.192	12.192	12.192	12.192	12.192	12.192
278	Number of ROW Headers	4			4	4	4	4	4	4	4
279	Size of ROW Headers	1 1/2	nominal IPS		1 1/2	1 1/2	1 1/2	1 1/2	1 1/2	1 1/2	1 1/2
280	I.D. of ROW Headers	1.61	inches		1.61	1.61	1.61	1.61	1.61	1.61	1.61
281	O.D. of ROW Headers	1.9	inches		1.9	1.9	1.9	1.9	1.9	1.9	1.9
282	I.D. of ROW Headers	0.040894	meters		0.040894	0.040894	0.040894	0.040894	0.040894	0.040894	0.040894
283	O.D. of ROW Headers	0.04826	meters		0.04826	0.04826	0.04826	0.04826	0.04826	0.04826	0.04826
284	Inside area of ROW Headers	6.2653366	square meters		6.265	6.265	6.265	6.265	6.265	6.265	6.265
285	Outside area of ROW headers	7.3938755	square meters		7.394	7.394	7.394	7.394	7.394	7.394	7.394
286	Reynolds Number for ROW Header	8767.3498		turbulent	8,767	13,151	17,535	21,918	26,302	30,686	35,069
287	Nussult Number (Turbulent Flow)	64		Dittus-Boelter Eqn.	64	89	112	134	155	175	195
288	Nussult Number (Laminar Flow, constant surface temperature)	3.66		Incropera & Dewitt 2nd ed. formula 8.53	3.66	3.66	3.66	3.66	3.66	3.66	3.66
289	Use this value of the Nussult Number	64			64	89	112	134	155	175	195
290	Internal pipe convection coefficient, h = Nussult No * k / D	927	W/m2	value of h1 in below calculation	927	1282	1614	1929	2232	2525	2810
291											
292											
293	R, internal convection	0.0002	W/Deg C	equals 1/(h1*2*pi*r1*L)	0.0002	0.0001	0.0001	0.0001	0.0001	0.0001	0.0001
294	R, wall conduction	0.0028	W/Deg C	equals ln (r2/r1) /(2*pi*k of PVC*length of PCV pi	0.0028	0.0028	0.0028	0.0028	0.0028	0.0028	0.0028
295	R, External convection on bare pipe	0.0270	W/Deg C	equals 1/(h2*2*pi*r1*L)	0.0270	0.0270	0.0270	0.0270	0.0270	0.0270	0.0270
296	R, external insulation conduction	0.0323	W/Deg C	equals ln (r2/r1) /(2*pi*k of insulation*length of i	0.0323	0.0323	0.0323	0.0323	0.0323	0.0323	0.0323
297	R, External convection on insulation o.d.	0.0178	W/Deg C	equals 1/(h2*2*pi*r1*L)	0.0270	0.0270	0.0270	0.0270	0.0270	0.0270	0.0270
298											
299	Heat Transfer Rate, Q, from ROW Headers, w/o insulation	831	Watts	equals (Tambient - Tair)/Sum R (not including R ins	333	500	667	500	667	835	1002
300	Heat Transfer Rate, Q, from ROW Headers, with insulation	401	Watts	equals (Tambient - Tair)/Sum R (including R insulat	160	241	321	241	321	401	482
301											
302											

	A	B	C	D	E	F	G	H	I	J	K
303											
304	**IPND:**										
305	Length of BLOCK Headers	150	feet		150	150	150	150	150	150	150
306	Length of BLOCK Headers	45.72	meters		45.72	45.72	45.72	45.72	45.72	45.72	45.72
307	Number of BLOCK Headers	1			1	1	1	1	1	1	1
308	Size of BLOCK Headers	2	nominal IPS		2	2	2	2	2	2	2
309	I.D. of BLOCK Headers	2.067	inches		2.067	2.067	2.067	2.067	2.067	2.067	2.067
310	O.D. of BLOCK Headers	2.375	inches		2.375	2.375	2.375	2.375	2.375	2.375	2.375
311	I.D. of BLOCK Headers	0.0525018	meters		0.053	0.053	0.053	0.053	0.053	0.053	0.053
312	O.D. of BLOCK Headers	0.060325	meters		0.060	0.060	0.060	0.060	0.060	0.060	0.060
313	Inside area of BLOCK Headers	7.5410234	square meters		7.541	7.541	7.541	7.541	7.541	7.541	7.541
314	Outside area of BLOCK headers	8.6646979	square meters		8.665	8.665	8.665	8.665	8.665	8.665	8.665
315	Reynolds Number for BLOCK Header	27315.788		turbulent	27,316	40,974	54,632	68,289	81,947	95,605	109,263
316	Nussult Number (Turbulent Flow)	159		Dittus-Boelter Eqn.	159	221	278	332	384	434	483
317	Nussult Number (Laminar Flow, constant surface temperature)	3.66		Incropera & Dewitt 2nd ed. formula 8.53	3.66	3.66	3.66	3.66	3.66	3.66	3.66
318	Use this value of the Nussult Number	159			159	221	278	332	384	434	483
319	Internal pipe convection coefficient, h = Nussult No * k / D	1792	W/m2	value of h1 in below calculation	1792	2479	3120	3730	4316	4882	5432
320											
321											
322	R, internal convection	0.0001	W/Deg C	equals 1/(h1*2*pi*r1*L)	0.0001	0.0001	0.0000	0.0000	0.0000	0.0000	0.0000
323	R, wall conduction	0.0025	W/Deg C	equals ln (r2/r1) /(2*pi*k of PVC*length of PCV pi	0.0025	0.0025	0.0025	0.0025	0.0025	0.0025	0.0025
324	R, External convection on bare pipe	0.0231	W/Deg C	equals 1/(h2*2*pi*r1*L)	0.0231	0.0231	0.0231	0.0231	0.0231	0.0231	0.0231
325	R, external insulation conduction	0.0285	W/Deg C	equals ln (r2/r1) /(2*pi*k of insulation*length of i	0.0285	0.0285	0.0285	0.0285	0.0285	0.0285	0.0285
326	R, External convection on insulation o.d.	0.0173	W/Deg C	equals 1/(h2*2*pi*r1*L)	0.0173	0.0173	0.0173	0.0173	0.0173	0.0173	0.0173
327											
328	Heat Transfer Rate, Q, from BLOCK Headers, w/o insulation	973	Watts	equals (Tambient - Tair)/Sum R (not including R ins	389	584	779	585	779	975	1170
329	Heat Transfer Rate, Q, from BLOCK Headers, with insulation	461	Watts	equals (Tambient - Tair)/Sum R (including R insulat	185	277	369	277	369	462	554
330											
331											
332											
333											
334											
335											
336											

	A	B	C	D		E	F	G	H	I	J	K
337	**Summary of Heat Loads (IPND):**			Notes or Comments:								
338												
339	Heat Load per TEC	3	Watts			3	3	3	3	3	3	3
340	Number of TECs	497			497	497	497	497	497	497	497	497
341	TEC Heat Load	1491	Watts			1491	1491	1491	1491	1491	1491	1491
342												
343	Heat Load from Pump	1119	Watts	based on 1.5 HP Motor		1119	1119	1119	1119	1119	1119	1119
344												
345	Heat Transfer Rate, Q, from TEC Hoses, w/o insulation	2,112	Watts			845	1,267	1,690	1,267	1,690	2,142	2,571
346	Heat Transfer Rate, Q, from TEC Headers, w/o insulation	877	Watts			351	527	703	528	704	880	1,057
347	Heat Transfer Rate, Q, from ROW Headers, w/o insulation	831	Watts			333	500	667	500	667	835	1,002
348	Heat Transfer Rate, Q, from BLOCK Headers, w/o insulation	973	Watts			389	584	779	585	779	975	1,170
349												
350	Total Heat Load, w/o insulation	7,403	Watts			4,527	5,488	6,449	5,490	6,450	7,441	8,409
351	Total Heat Load w/o insulation	2.11	Tons			1.29	1.56	1.83	1.56	1.83	2.12	2.39
352												
353												
354	Heat Transfer Rate, Q, from TEC Hoses, with insulation	1288	Watts			515	773	1030	773	1030	1299	1559
355	Heat Transfer Rate, Q, from TEC Headers, with insulation	444	Watts			177	266	355	267	356	445	534
356	Heat Transfer Rate, Q, from ROW Headers, with insulation	401	Watts			160	241	321	241	321	401	482
357	Heat Transfer Rate, Q, from BLOCK Headers, with insulation	461	Watts			185	277	369	277	369	462	554
358												
359	Total Heat Load, with insulation	5203	Watts		6329	3647	4166	4686	4167	4686	5216	5738
360	Total Heat Load with insulation	1.48	Tons			1.04	1.18	1.33	1.19	1.33	1.48	1.63
361												
362	System Total Flow Rate from Above Calculations	19.7	gpm	from Row 26		19.7	29.5	39.3	49.1	59.0	68.8	78.6
363	System Total Flow Rate from Above Calculations	1.24	liters/second			1.24	1.86	2.48	3.10	3.72	4.34	4.96
364	System Total Flow Rate from Above Calculations	1.24	kg/second	mass flow rate, m dot		1.24	1.85	2.47	3.09	3.71	4.33	4.94
365	C sub P for water	4.1926	kJ/kg-K	Cp		4.1926	4.1926	4.1926	4.1926	4.1926	4.1926	4.1926
366	Bulk Water Temperature Rise From Chiller out to Chiller Return	1.00	C	Formula : Q = m dot * Cp * Delta T, solve for T		0.70	0.54	0.45	0.32	0.30	0.29	0.28
367	Bulk Water Temperature Rise From Chiller out to Chiller Return	1.81	F			1.27	0.96	0.81	0.58	0.54	0.52	0.50
368												
369												
370												
371	**IPND Summaries:**											
372	IPND Line Sizes:											
373	Hose, Pipe or Fitting I.d.	0.125	inch									
374	Pipe Size for TEC header on block	0.75	nominal IPS									
375	Pipe Size for ROW header on block	1.5	nominal IPS									
376	Pipe Size for Block header on block	2	nominal IPS									
377												
378												

	A	B	C	D	E	F	G	H	I	J	K
379	**IPND Volume Summaries:**			Notes or Comments:							
380	24 inch hose volume										
381	Combined Length of Supply and Return hoses	4	feet								
382	Number of TEC / Housings per TEC Header	31									
383	Internal area	0.0122718	square inches								
384	24 inch hose volume, total, for all supply and return TEC hoses	365.21015	in3	B382*B381*12*B383*B389*B396*B403							
385	24 inch hose volume, total, for all supply and return TEC hoses	1.5809963	gallons								
386											
387	TEC Header Volume										
388	Combined Length of supply and return TEC headers on block	15	feet								
389	Number of TEC Headers per Row Header	5									
390	Internal area	0.5332665	square inches								
391	TEC Header Volume, total for all TEC Headers	1919.7594	in3	B389*B388*12*B390*B396*B403							
392	TEC Header Volume, total for all TEC Headers	8.3106468	gallons								
393											
394	ROW Header Volume										
395	Combined Length of supply and return ROW headers on block	40	feet								
396	Number of Row Headers per Block Header	4		this over estimates the volume as the muon catcher is assumed to be a full two blocks wide							
397	Internal area	2.0358306	square inches								
398	ROW Header Volume, Total for all ROW Headers	3908.7947	in3	B396*B395*12*B397*B403							
399	ROW Header Volume, Total for all ROW Headers	16.921189	gallons								
400											
401	Block Header Volume										
402	Combined Length of Block supply and return headers on Detector	150	feet								
403	Number of Block Headers	1									
404	Internal area	3.355605	square inches								
405	Block Header Volume	6040.089	in3	B403*B402*12*B404							
406	Block Header Volume	26.147572	gallons								
407											
408	Total Piping Volume	52.960404	gallons	B385+B392+B399+B406							
409											

	A	B	C	D	E	F	G	H	I	J	K
1	**Basic Data and Design Parameters:**			Notes or Comments:	**Far Detector Simple flow calculations:**						
2	Absolute (dynamic) Viscosity of water at 60 F	1.1	centipoise								
3	Kinematic Viscosity of water at 60 F	1.1	centistokes								
4	density of water at 60 F	62.4	pounds per cubic foot								
5											
6	Minimum Goal TEC Housing Flow Rate	2	ml/second		2	3	4	5	6	7	8
7	Minimum Goal TEC Housing Flow Rate	0.002	liters/second		0.002	0.003	0.004	0.005	0.006	0.007	0.008
8	Minimum Goal TEC Housing Flow Rate	0.12	liters / minute		0.12	0.18	0.24	0.3	0.36	0.42	0.48
9	Minimum Goal TEC Housing Flow Rate	0.0317006	gallons / minute		0.032	0.048	0.063	0.079	0.095	0.111	0.127
10											
11											
12	TEC Flow Rate:	2	ml/second		2	3	4	5	6	7	8
13	TEC Housing Pressure Drop (with Orifice):	8.560	feet		8.560	17.494	30.001	46.080	65.737	88.965	115.767
14	TEC Housing Pressure Drop (Without Orifice):	0.325	feet		0.325	0.731	1.300	2.032	2.926	3.982	5.201
15	24 inch Hose Pressure Drop:	0.418	feet		0.418	0.627	0.888	1.162	1.774	2.415	3.154
16	TEC Header on Block Pressure Drop:	0.039	feet		0.037	0.084	0.149	0.233	0.336	0.457	0.597
17	ROW Header Pressure Drop:	2.751	feet		0.310	0.696	1.238	1.935	2.786	3.792	4.953
18	BLOCK to BLOCK Header Pressure Drop:	0.485	feet		0.485	0.485	0.485	0.485	0.485	0.485	0.485
19	Filter Pressure Drop:	3.270	feet		3.270	4.905	6.540	8.174	9.809	11.444	13.079
20	Heat Exchanger Pressure drop:	3.270	feet		3.270	4.905	6.540	8.174	9.809	11.444	13.079
21											
22	Sum of Pressure Drops (With Orifice)	8.133	psi		7.076	12.636	19.839	28.670	39.270	51.503	65.400
23	Sum of Pressure Drops (With Orifice)	18.8	feet		16.3	29.2	45.8	66.2	90.7	119.0	151.1
24	Sum of Pressure Drops (without Orifice)	4.570	psi		3.512	5.381	7.418	9.606	12.086	14.723	17.549
25	Sum of Pressure Drops (without Orifice)	10.559	feet		8.115	12.434	17.140	22.196	27.926	34.020	40.549
26	Total Flow Rate (System)	23.585	gpm		23.585	35.378	47.171	58.963	70.756	82.548	94.341
27	Total Flow Rate (System)	1415.1	gph		1415.1	2122.7	2830.2	3537.8	4245.4	4952.9	5660.5
28											
29	**TEC Housing Pressure Drop:**										
30	Minimum Goal TEC Housing Flow Rate	0.032	gallons / minute		0.032	0.048	0.063	0.079	0.095	0.111	0.127
31	Pressure drop for TEC Housing (from Mikes measurement)	0.141	psi		0.141	0.317	0.563	0.879	1.266	1.723	2.251
32	Pressure drop for TEC Housing (from Mikes measurement)	0.325	feet		0.325	0.731	1.300	2.032	2.926	3.982	5.201
33	Pressure drop for TEC Housing (Using Leons Orifice)	3.705	psi		3.705	7.571	12.984	19.943	28.450	38.503	50.103
34	Pressure drop for TEC Housing (using Leons Orifice)	8.560	feet		8.560	17.494	30.001	46.080	65.737	88.965	115.767
35											

	A	B	C	D	E	F	G	H	I	J	K
36	**24 inch Hose Pressure Drop:**			Notes or Comments:							
37	Minimum Flow Rate in a TEC Housing	0.0317006	gpm		0.032	0.048	0.063	0.079	0.095	0.111	0.127
38	Pipe Size for TEC header on block	1/9		used in lookup table for pipe or hose dimensions.	1/9	1/9	1/9	1/9	1/9	1/9	1/9
39	24 inch long hose (or Pipe) I.d.	0.125	inch		0.125	0.125	0.125	0.125	0.125	0.125	0.125
40	Pipe Friction Factor for fully turbulent flow	0.034			0.034	0.034	0.034	0.034	0.034	0.034	0.034
41	Reynolds Number	729		laminar	729	1,093	1,457	1,821	2,186	2,550	2,914
42	Internal area	0.0122718	square inches		0.012	0.012	0.012	0.012	0.012	0.012	0.012
43	Velocity	9.9453	inch/second		9.9453	14.9180	19.8906	24.8633	29.8360	34.8086	39.7813
44	Velocity	0.8288	feet / second		0.8288	1.2432	1.6576	2.0719	2.4863	2.9007	3.3151
45	Combined Length of Supply and Return hoses	4	feet		4	4	4	4	4	4	4
46	K (resistance coefficient)	13.056			13.056	13.056	13.056	13.056	13.056	13.056	13.056
47	K (resistance coefficient) for fittings from below	1.50			1.50	1.50	1.50	1.50	1.50	1.50	1.50
48	K (resistance coefficient) total	14.556			14.556	14.556	14.556	14.556	14.556	14.556	14.556
49	Pressure drop for Hose (turbulent flow)	0.0672596	psi	does not apply as Re < 2000	0.067	0.151	0.269	0.420	0.605	0.824	1.076
50	Pressure drop for Hose (turbulent flow)	0.1554099	feet	does not apply as Re < 2000	0.155	0.350	0.622	0.971	1.399	1.904	2.487
51	Pressure drop for hose (laminar flow)	0.1559708	psi	applies	0.156	0.234	0.312	0.390	0.468	0.546	0.624
52	Pressure drop for hose (laminar flow)	0.3603862	feet	applies	0.360	0.541	0.721	0.901	1.081	1.261	1.442
53	Use this Value for Pressure Drop on hose:	0.3603862	feet		0.360	0.541	0.721	0.901	1.399	1.904	2.487
54											
55	**24 inch Hose End Fittings Pressure Drop:**			Notes or Comments:							
56	Hose Size for TEC header on block (used in lookup table)	1/10		used in lookup table for pipe or hose dimensions.	1/10	1/10	1/10	1/10	1/10	1/10	1/10
57	Hose, Pipe or Fitting I.d.	0.075	inch		0.075	0.075	0.075	0.075	0.075	0.075	0.075
58	Pipe Friction Factor for fully turbulent flow	0.038			0.038	0.038	0.038	0.038	0.038	0.038	0.038
59	Reynolds Number	1,214		laminar	1,214	1,821	2,428	3,036	3,643	4,250	4,857
60	Internal area	0.0044179	square inches		0.004	0.004	0.004	0.004	0.004	0.004	0.004
61	Velocity	27.6259	inch/second		27.6259	41.4389	55.2518	69.0648	82.8777	96.6907	110.5036
62	Velocity	2.3022	feet / second		2.3022	3.4532	4.6043	5.7554	6.9065	8.0576	9.2086
63	Combined Length of hose end fitting for both hoses, both ends	0.0833333	feet		0.083	0.083	0.083	0.083	0.083	0.083	0.083
64	K (resistance coefficient)	0.5066667			0.507	0.507	0.507	0.507	0.507	0.507	0.507
65	K (resistance coefficient) for fittings from below	0.00			0.00	0.00	0.00	0.00	0.00	0.00	0.00
66	K (resistance coefficient) total	0.5066667			0.507	0.507	0.507	0.507	0.507	0.507	0.507
67	Pressure drop for Hose (turbulent flow)	0.0180646	psi	does not apply as Re < 2000	0.018	0.041	0.072	0.113	0.163	0.221	0.289
68	Pressure drop for Hose (turbulent flow)	0.0417402	feet	does not apply as Re < 2000	0.042	0.094	0.167	0.261	0.376	0.511	0.668
69	Pressure drop for hose (laminar flow)	0.0250725	psi	applies	0.025	0.038	0.050	0.063	0.075	0.088	0.100
70	Pressure drop for hose (laminar flow)	0.0579325	feet	applies	0.058	0.087	0.116	0.145	0.174	0.203	0.232
71	Use this Value for Pressure Drop on hose:	0.0579325	feet		0.058	0.087	0.167	0.261	0.376	0.511	0.668
72											
73	Use this Value for Pressure Drop on hose + end Fittings:	0.4183187	feet		0.418	0.627	0.888	1.162	1.774	2.415	3.154
74											
75											

	A	B	C	D	E	F	G	H	I	J	K
76	**Far Detector**			Notes or Comments:							
77	**TEC Header on Block Pressure Drop:**										
78	Number of TEC / Housings per TEC Header	31		(assumes services two blocks served by one TEC h	31	31	31	31	31	31	31
79	Minimum Flow Rate in a TEC Header	0.983	gpm		0.983	1.474	1.965	2.457	2.948	3.440	3.931
80	Pipe Size for TEC header on block	3/4	nominal IPS		3/4	3/4	3/4	3/4	3/4	3/4	3/4
81	Pipe I.d.	0.824	inch		0.824	0.824	0.824	0.824	0.824	0.824	0.824
82	Pipe Friction Factor for fully turbulent flow	0.025			0.025	0.025	0.025	0.025	0.025	0.025	0.025
83	Reynolds Number	3,426		turbulent	3,426	5,139	6,852	8,565	10,278	11,991	13,704
84	Internal area	0.533	square inches		0.533	0.533	0.533	0.533	0.533	0.533	0.533
85	Velocity	7.095	inch/second		7.095	10.642	14.190	17.737	21.285	24.832	28.380
86	Velocity	0.591	feet / second		0.591	0.887	1.182	1.478	1.774	2.069	2.365
87	Combined Length of supply and return TEC headers on block	15	feet		14	14	14	14	14	14	14
88	K (resistance coefficient) for pipe	5.461			5.097	5.097	5.097	5.097	5.097	5.097	5.097
89	K (resistance coefficient) for fittings from below	1.77			1.77	1.77	1.77	1.77	1.77	1.77	1.77
90	K (resistance coefficient) total	7.228			6.864	6.864	6.864	6.864	6.864	6.864	6.864
91	Pressure drop for header on block (turbulent flow)	0.017	psi	applies	0.016	0.036	0.065	0.101	0.145	0.198	0.258
92	Pressure drop for header on block (turbulent flow)	0.039	feet	applies	0.037	0.084	0.149	0.233	0.336	0.457	0.597
93	Pressure drop for header on block (laminar flow)	0.010	psi	does not apply as Re > 2000	0.009	0.013	0.018	0.022	0.027	0.031	0.036
94	Pressure drop for header on block (laminar flow)	0.022	feet	does not apply as Re > 2000	0.021	0.031	0.041	0.052	0.062	0.072	0.083
95	Use this Value for Pressure Drop on header on block:	0.039	feet		0.037	0.084	0.149	0.233	0.336	0.457	0.597
96											
97	**ROW Header Pressure Drop:**			Notes or Comments:							
98	Number of TEC Headers per Row Header	24			24	24	24	24	24	24	24
99	Minimum Flow Rate in a ROW Header	23.585	gpm		23.585	35.378	47.171	58.963	70.756	82.548	94.341
100	Pipe Size for ROW header on block	2	nominal IPS		2	2	2	2	2	2	2
101	Pipe I.d.	2.067	inch		2.067	2.067	2.067	2.067	2.067	2.067	2.067
102	Pipe Friction Factor for fully turbulent flow	0.019			0.019	0.019	0.019	0.019	0.019	0.019	0.019
103	Reynolds Number	32,779		turbulent	32,779	49,168	65,558	81,947	98,337	114,726	131,116
104	Internal area	3.356	square inches		3.356	3.356	3.356	3.356	3.356	3.356	3.356
105	Velocity	27.060	inch/second		27.060	40.590	54.120	67.650	81.181	94.711	108.241
106	Velocity	2.255	feet / second		2.255	3.383	4.510	5.638	6.765	7.893	9.020
107	Combined Length of supply and return ROW headers on block	300	feet		20	20	20	20	20	20	20
108	K (resistance coefficient) for pipe	33.091			2.206	2.206	2.206	2.206	2.206	2.206	2.206
109	K (resistance coefficient) for fittings from below	1.71			1.71	1.71	1.71	1.71	1.71	1.71	1.71
110	K (resistance coefficient) total	34.801			3.916	3.916	3.916	3.916	3.916	3.916	3.916
111	Pressure drop for Row header (turbulent flow)	1.191	psi	applies	0.134	0.301	0.536	0.837	1.206	1.641	2.143
112	Pressure drop for Row header (turbulent flow)	2.751	feet	applies	0.310	0.696	1.238	1.935	2.786	3.792	4.953
113	Pressure drop for Row header (laminar flow)	0.116	psi	does not apply as Re > 2000	0.008	0.012	0.016	0.019	0.023	0.027	0.031
114	Pressure drop for Row header (laminar flow)	0.269	feet	does not apply as Re > 2000	0.018	0.027	0.036	0.045	0.054	0.063	0.072
115	Use this Value for Pressure Drop on Row header:	2.751	feet		0.310	0.696	1.238	1.935	2.786	3.792	4.953
116											
117											
118											

	A	B	C	D	E	F	G	H	I	J	K
119	**BLOCK to BLOCK Header Pressure Drop:**			Notes or Comments:							
120	Number of Row Headers per Block Header	1			1	1	1	1	1	1	1
121	Minimum Flow Rate in a Block Header	23.585	gpm		23.585	35.378	47.171	58.963	70.756	82.548	94.341
122	Pipe Size for Block header on block	2	nominal IPS		2	2	2	2	2	2	2
123	Pipe I.d.	2.067	inch		2.067	2.067	2.067	2.067	2.067	2.067	2.067
124	Pipe Friction Factor for fully turbulent flow	0.019			0.019	0.019	0.019	0.019	0.019	0.019	0.019
125	Reynolds Number	32,779		turbulent	32,779	49,168	65,558	81,947	98,337	114,726	131,116
126	Internal area	3.356	square inches		3.356	3.356	3.356	3.356	3.356	3.356	3.356
127	Velocity	27.060	inch/second		27.060	40.590	54.120	67.650	81.181	94.711	108.241
128	Velocity	2.255	feet / second		2.255	3.383	4.510	5.638	6.765	7.893	9.020
129	Combined Length of Block supply and return headers on Detector	50	feet		50	50	50	50	50	50	50
130	K (resistance coefficient) for pipe	5.515			5.515	5.515	5.515	5.515	5.515	5.515	5.515
131	K (resistance coefficient) for fittings from below	0.627			0.627	0.627	0.627	0.627	0.627	0.627	0.627
132	K (resistance coefficient) total	6.142			6.142	6.142	6.142	6.142	6.142	6.142	6.142
133	Pressure drop for header on block (turbulent flow)	0.210	psi	applies	0.210	0.473	0.840	1.313	1.891	2.574	3.362
134	Pressure drop for header on block (turbulent flow)	0.485	feet	applies	0.485	1.092	1.942	3.034	4.369	5.947	7.768
135	Pressure drop for header on block (laminar flow)	0.019	psi	does not apply as Re > 2000	0.019	0.029	0.039	0.049	0.058	0.068	0.078
136	Pressure drop for header on block (laminar flow)	0.045	feet	does not apply as Re > 2000	0.045	0.067	0.090	0.112	0.134	0.157	0.179
137	Use this Value for Pressure Drop on Block to Block header:	0.485	feet		0.485	1.092	1.942	3.034	4.369	5.947	7.768
138											
139											
140											
141	**Fitting Pressure Drop, K values:**										
142	Tee, flow through branch From TEC Header to Hose	1.50		K = 60 f sub T							
143	Tee, flow through branch From Row Header to TEC Header	1.14		K = 60 f sub T							
144	Tee, flow through branch From Block Header to Row Header	1.14		K = 60 f sub T							
145	Elbow, 90 degree, on Row Header	0.57		K = 30 f sub T							
146	Elbow, 90 degree, on Block Header	0.57		K = 30 f sub T							
147	Ball valve, reduced port, on Row Header	0.06		K = 3 f sub T							
148	Ball valve, reduced port, on Block Header	0.06		K = 3 f sub T							
149											
150											
151											
152	**Pressure Drop, Filter, Heatexchanger:**										
153	Full Flow Filter for Jumbo Cartridge, 1 microm rating	1.415	psi	6 psi at 100 gpm linear	1.415	2.123	2.830	3.538	4.245	4.953	5.660
154	Heat Exchanger in the Chiller	1.415	psi	assume same as filter	1.415	2.123	2.830	3.538	4.245	4.953	5.660
155											
156											
157											
158	**PUMP Net Positive Suction Head Available, NPSHA:**										
159	Barometric Pressure, minimum at sight,	28.7	in hg	estimated for 750 feet mean sea level							
160	Barometric Pressure, minimum at sight,	14.09744	psi	unit conversion							
161	Gauge Pressure of open reservior,	0	psi	open reservior = 0 by defination							
162	Vapor Pressure of water at 60 F (start-up conditions)	0.26	psi	from Burkes Pump Engineering Date							
163	Specific Gravity of water at 60 F	0.999		from Burkes Pump Engineering Date							
164	Static Height of reservior surface above pump inlet centerline	2	feet	estimated							
165	Head Loss in the pump Suction Piping	3	feet	estimated							
166											
167	PUMP Net Positive Suction Head Available, NPSHA:	31.0	feet								
168	Pump Net Positive Suction Head Required, NPSHR:	10	feet	from Scot Pump Data Sheet for 50 gpm							
169	Does NPSHA > NPSHR?	Okay									
170											
171											

	A	B	C	D		E	F	G	H	I	J	K
172	**HEAT TRANSFER CALCULATIONS AND ENERGY BALANCE for IPND:**			Notes or Comments:								
173												
174	**Basic Input Parameters:**											
175	Nominal Supply Water Temperature	10	C		283	10	10	10	5	5	5	5
176	Nominal Ambient Air Temperature	35	C		308	20	25	30	20	25	30	35
177	Nominal Supply Water Temperature	50	F			50	50	50	41	41	41	41
178	Nominal Ambient Air Temperature	95	F			68	77	86	68	77	86	95
179												
180	Nominal Insulation Thickness	1	cm			1	1	1	1	1	1	1
181	Nominal Insulation Thermal Conductivity	0.035	W/m-K	from insulation cut sheet		0.035	0.035	0.035	0.035	0.035	0.035	0.035
182	Nominal PVC Pipe Material Thermal Conductivity	0.19	W/m-K	from engineering tool box value		0.19	0.19	0.19	0.19	0.19	0.19	0.19
183	Nominal external natural convection coefficient in free air, h2 below	5		estimated per Incropera & Dewitt, Table 1.1		5	5	5	5	5	5	5
184												
185	Prandt Number for Water at 280 K	10.26		from Incropera & Dewitt, Table A.6		10.26	10.26	10.26	10.26	10.26	10.26	10.26
186	Viscosity of Water at 280 K	1.42E-03	N*s/m2	from Incropera & Dewitt, Table A.6		1.42E-03	1.42E-03	1.42E-03	1.42E-03	1.42E-03	1.42E-03	1.42E-03
187	Thermal Conductivity of Water at 280K	0.582	W/m-K)	from Incropera & Dewitt, Table A.6		0.582	0.582	0.582	0.582	0.582	0.582	0.582
188	Specific Heat of Water at 280 K	4.198	kJ/kg-K	from Incropera & Dewitt, Table A.6								
189												
190	Prandt Number for Water at 283 K	9.39		interpolated from 280 and 285K data		9.39	9.39	9.39	9.39	9.39	9.39	9.39
191	Viscosity of Water at 283 K	1.30E-03	N*s/m2	interpolated from 280 and 285K data		1.30E-03	1.30E-03	1.30E-03	1.30E-03	1.30E-03	1.30E-03	1.30E-03
192	Thermal Conductivity of Water at 283K	0.5868	W/m-K)	interpolated from 280 and 285K data		0.5868	0.5868	0.5868	0.5868	0.5868	0.5868	0.5868
193	Specific Heat of Water at 280 K	4.1926	kJ/kg-K	interpolated from 280 and 285K data		0	0	0	0	0	0	0
194												
195	Prandt Number for Water at 285 K	8.81		from Incropera & Dewitt, Table A.6		8.81	8.81	8.81	8.81	8.81	8.81	8.81
196	Viscosity of Water at 285 K	1.23E-03	N*s/m2	from Incropera & Dewitt, Table A.6		1.23E-03	1.23E-03	1.23E-03	1.23E-03	1.23E-03	1.23E-03	1.23E-03
197	Thermal Conductivity of Water at 285 K	0.59	W/m-K)	from Incropera & Dewitt, Table A.6		0.59	0.59	0.59	0.59	0.59	0.59	0.59
198	Specific Heat of Water at 285 K	4.189	kJ/kg-K	from Incropera & Dewitt, Table A.6								
199												
200	Prandt Number for Water at 290 K	7.56		from Incropera & Dewitt, Table A.6		7.56	7.56	7.56	7.56	7.56	7.56	7.56
201	Viscosity of Water at 290 K	1.08E-03	N*s/m2	from Incropera & Dewitt, Table A.6		1.08E-03	1.08E-03	1.08E-03	1.08E-03	1.08E-03	1.08E-03	1.08E-03
202	Thermal Conductivity of Water at 290 K	0.598	W/m-K)	from Incropera & Dewitt, Table A.6		0.598	0.598	0.598	0.598	0.598	0.598	0.598
203	Specific Heat of Water at 290 K	4.184	kJ/kg-K	from Incropera & Dewitt, Table A.6								
204												
205	Prandt Number for Water at 295 K	6.62		from Incropera & Dewitt, Table A.6		6.62	6.62	6.62	6.62	6.62	6.62	6.62
206	Viscosity of Water at 295 K	9.59E-04	N*s/m2	from Incropera & Dewitt, Table A.6		9.59E-04	9.59E-04	9.59E-04	9.59E-04	9.59E-04	9.59E-04	9.59E-04
207	Thermal Conductivity of Water at 295 K	0.606	W/m-K)	from Incropera & Dewitt, Table A.6		0.606	0.606	0.606	0.606	0.606	0.606	0.606
208	Specific Heat of Water at 295 K	4.181	kJ/kg-K	from Incropera & Dewitt, Table A.6								
209												
210	Prandt Number for Water at 300 K	8.55E-04		from Incropera & Dewitt, Table A.6		8.55E-04	8.55E-04	8.55E-04	8.55E-04	8.55E-04	8.55E-04	8.55E-04
211	Viscosity of Water at 300 K	1.23E-03	N*s/m2	from Incropera & Dewitt, Table A.6		1.23E-03	1.23E-03	1.23E-03	1.23E-03	1.23E-03	1.23E-03	1.23E-03
212	Thermal Conductivity of Water at 300 K	0.613	W/m-K)	from Incropera & Dewitt, Table A.6		0.613	0.613	0.613	0.613	0.613	0.613	0.613
213	Specific Heat of Water at 300 K	4.179	kJ/kg-K	from Incropera & Dewitt, Table A.6								
214												
215												
216												

	A	B	C	D	E	F	G	H	I	J	K
217	**FAR DETECTOR:**										
218	Length of TEC HOSES	4	0		4	4	4	4	4	4	4
219	Length of TEC HOSES	1.2192	meters		1.2192	1.2192	1.2192	1.2192	1.2192	1.2192	1.2192
220	Number of TEC HOSES	744			744	744	744	744	744	744	744
221	Size of TEC Hoses	1/9	0		1/9	1/9	1/9	1/9	1/9	1/9	1/9
222	I.D. of TEC hoses	0.125	inches		0.125	0.125	0.125	0.125	0.125	0.125	0.125
223	O.D. of TEC hoses	0.312	inches		0.312	0.312	0.312	0.312	0.312	0.312	0.312
224	I.D. of TEC hoses	0.003175	meters		0.003	0.003	0.003	0.003	0.003	0.003	0.003
225	O.D. of TEC hoses	0.0079248	meters		0.008	0.008	0.008	0.008	0.008	0.008	0.008
226	Inside area of TEC Hoses	9.0477687	square meters		9.048	9.048	9.048	9.048	9.048	9.048	9.048
227	Outside area of TEC hoses	22.583231	square meters		22.583	22.583	22.583	22.583	22.583	22.583	22.583
228	Reynolds Number	728.53849		laminar	729	1,093	1,457	1,821	2,186	2,550	2,914
229	Nussult Number (Turbulent Flow)	9		Dittus-Boelter Eqn.	9	12	15	18	21	24	27
230	Nussult Number (Laminar Flow, constant surface temperature)	3.66		Incropera & Dewitt 2nd ed. formula 8.53	3.66	3.66	3.66	3.66	3.66	3.66	3.66
231	Use this value of the Nussult Number	3.66			3.7	3.7	3.7	3.7	3.7	23.9	26.6
232	Internal pipe convection coefficient, h = Nussult No * k / D	680.1	W/m2	value of h1 in below calculation	680.1	680.1	680.1	680.1	680.1	4444.8	4945.9
233											
234											
235	R, internal convection	0.0002	W/Deg C	equals 1/(h1*2*pi*r1*L)	0.0221	0.0221	0.0221	0.0221	0.0221	0.0221	0.0221
236	R, wall conduction	0.0008	W/Deg C	equals ln (r2/r1) /(2*pi*k of PVC*length of PCV pi	0.0008	0.0008	0.0008	0.0008	0.0008	0.0008	0.0008
237	R, External convection on bare pipe	0.0089	W/Deg C	equals 1/(h2*2*pi*r1*L)	0.0089	0.0089	0.0089	0.0089	0.0089	0.0089	0.0089
238	R, external insulation conduction	0.0063	W/Deg C	equals ln (r2/r1) /(2*pi*k of insulation*length of i	0.0063	0.0063	0.0063	0.0063	0.0063	0.0063	0.0063
239	R, External convection on insulation o.d.	0.0086	W/Deg C	equals 1/(h2*2*pi*r1*L)	0.0087	0.0086	0.0085	0.0084	0.0083	0.0082	0.0081
240											
241	Heat Transfer Rate, Q, from TEC Hoses, w/o insulation	2535	Watts	equals (Tambient - Tair)/Sum R (not including R ins	314	472	629	472	629	786	943
242	Heat Transfer Rate, Q, from TEC Hoses, with insulation	1545	Watts	equals (Tambient - Tair)/Sum R (including R insulat	262	393	525	393	525	656	787
243											
244											

	A	B	C	D	E	F	G	H	I	J	K
245											
246	**FAR DETECTOR:**										
247	Length of TEC Headers	15	feet		14	14	14	14	14	14	14
248	Length of TEC Headers	4.572	meters		4.2672	4.2672	4.2672	4.2672	4.2672	4.2672	4.2672
249	Number of TEC Headers	24			24	24	24	24	24	24	24
250	Size of TEC Headers	3/4	nominal IPS		3/4	3/4	3/4	3/4	3/4	3/4	3/4
251	I.D. of TEC Headers	0.824	inches		0.824	0.824	0.824	0.824	0.824	0.824	0.824
252	O.D. of TEC Headers	1.05	inches		1.05	1.05	1.05	1.05	1.05	1.05	1.05
253	I.D. of TEC Headers	0.0209296	meters		0.021	0.021	0.021	0.021	0.021	0.021	0.021
254	O.D. of TEC Headers	0.02667	meters		0.027	0.027	0.027	0.027	0.027	0.027	0.027
255	Inside area of TEC Headers	7.2148659	square meters		6.734	6.734	6.734	6.734	6.734	6.734	6.734
256	Outside area of TEC headers	9.1937005	square meters		8.581	8.581	8.581	8.581	8.581	8.581	8.581
257	Reynolds Number	3426.076		turbulent	3,426	5,139	6,852	8,565	10,278	11,991	13,704
258	Nussult Number (Turbulent Flow)	30		Dittus-Boelter Eqn.	30	42	53	63	73	83	92
259	Nussult Number (Laminar Flow, constant surface temperature)	3.66		Incropera & Dewitt 2nd ed. formula 8.53	3.66	3.66	3.66	3.66	3.66	3.66	3.66
260	Use this value of the Nussult Number	30			30	42	53	63	73	83	92
261	Internal pipe convection coefficient, h = Nussult No * k / D	854	W/m2	value of h1 in below calculation	854	1181	1487	1777	2057	2327	2589
262											
263											
264	R, internal convection	0.0002	W/Deg C	equals 1/(h1*2*pi*r1*L)	0.0297	0.0297	0.0297	0.0297	0.0297	0.0297	0.0297
265	R, wall conduction	0.0019	W/Deg C	equals ln (r2/r1) /(2*pi*k of PVC*length of PCV pi	0.0020	0.0020	0.0020	0.0020	0.0020	0.0020	0.0020
266	R, External convection on bare pipe	0.0218	W/Deg C	equals 1/(h2*2*pi*r1*L)	0.0233	0.0233	0.0233	0.0233	0.0233	0.0233	0.0233
267	R, external insulation conduction	0.0232	W/Deg C	equals ln (r2/r1) /(2*pi*k of insulation*length of i	0.0248	0.0248	0.0248	0.0248	0.0248	0.0248	0.0248
268	R, External convection on insulation o.d.	0.0218	W/Deg C	equals 1/(h2*2*pi*r1*L)	0.0233	0.0233	0.0233	0.0233	0.0233	0.0233	0.0233
269											
270	Heat Transfer Rate, Q, from TEC Headers, w/o insulation	1052	Watts	equals (Tambient - Tair)/Sum R (not including R ins	182	273	364	273	364	455	546
271	Heat Transfer Rate, Q, from TEC Headers, with insulation	532	Watts	equals (Tambient - Tair)/Sum R (including R insulat	125	188	251	188	251	313	376
272											
273											

	A	B	C	D	E	F	G	H	I	J	K
274											
275	**FAR DETECTOR:**										
276	Length of ROW Headers	300	feet		20	20	20	20	20	20	20
277	Length of ROW Headers	91.44	meters		6.096	6.096	6.096	6.096	6.096	6.096	6.096
278	Number of ROW Headers	1			1	1	1	1	1	1	1
279	Size of ROW Headers	2	nominal IPS		2	2	2	2	2	2	2
280	I.D. of ROW Headers	2.067	inches		2.067	2.067	2.067	2.067	2.067	2.067	2.067
281	O.D. of ROW Headers	2.375	inches		2.375	2.375	2.375	2.375	2.375	2.375	2.375
282	I.D. of ROW Headers	0.0525018	meters		0.0525018	0.0525018	0.0525018	0.0525018	0.0525018	0.0525018	0.0525018
283	O.D. of ROW Headers	0.060325	meters		0.060325	0.060325	0.060325	0.060325	0.060325	0.060325	0.060325
284	Inside area of ROW Headers	15.082047	square meters		1.005	1.005	1.005	1.005	1.005	1.005	1.005
285	Outside area of ROW headers	17.329396	square meters		1.155	1.155	1.155	1.155	1.155	1.155	1.155
286	Reynolds Number	32778.945		turbulent	32,779	49,168	65,558	81,947	98,337	114,726	131,116
287	Nussult Number (Turbulent Flow)	185		Dittus-Boelter Eqn.	185	255	321	384	444	503	559
288	Nussult Number (Laminar Flow, constant surface temperature)	3.66		Incropera & Dewitt 2nd ed. formula 8.53	3.66	3.66	3.66	3.66	3.66	3.66	3.66
289	Use this value of the Nussult Number	185			185	255	321	384	444	503	559
290	Internal pipe convection coefficient, h = Nussult No * k / D	2073	W/m2	value of h1 in below calculation	2073	2868	3610	4316	4993	5649	6285
291											
292											
293	R, internal convection	0.0000	W/Deg C	equals 1/(h1*2*pi*r1*L)	0.1989	0.1989	0.1989	0.1989	0.1989	0.1989	0.1989
294	R, wall conduction	0.0013	W/Deg C	equals ln (r2/r1) /(2*pi*k of PVC*length of PCV pi	0.0191	0.0191	0.0191	0.0191	0.0191	0.0191	0.0191
295	R, External convection on bare pipe	0.0115	W/Deg C	equals 1/(h2*2*pi*r1*L)	0.1731	0.1731	0.1731	0.1731	0.1731	0.1731	0.1731
296	R, external insulation conduction	0.0142	W/Deg C	equals ln (r2/r1) /(2*pi*k of insulation*length of i	0.2136	0.2136	0.2136	0.2136	0.2136	0.2136	0.2136
297	R, External convection on insulation o.d.	0.0084	W/Deg C	equals 1/(h2*2*pi*r1*L)	0.1731	0.1731	0.1731	0.1731	0.1731	0.1731	0.1731
298											
299	Heat Transfer Rate, Q, from ROW Headers, w/o insulation	1946	Watts	equals (Tambient - Tair)/Sum R (not including R ins	26	38	51	38	51	64	77
300	Heat Transfer Rate, Q, from ROW Headers, with insulation	923	Watts	equals (Tambient - Tair)/Sum R (including R insulat	17	25	33	25	33	41	50
301											
302											

	A	B	C	D	E	F	G	H	I	J	K
303											
304	**FAR DETECTOR:**										
305	Length of BLOCK Headers	50	feet		50	50	50	50	50	50	50
306	Length of BLOCK Headers	15.24	meters		15.24	15.24	15.24	15.24	15.24	15.24	15.24
307	Number of BLOCK Headers	1			1	1	1	1	1	1	1
308	Size of BLOCK Headers	2	nominal IPS		2	2	2	2	2	2	2
309	I.D. of BLOCK Headers	2.067	inches		2.067	2.067	2.067	2.067	2.067	2.067	2.067
310	O.D. of BLOCK Headers	2.375	inches		2.375	2.375	2.375	2.375	2.375	2.375	2.375
311	I.D. of BLOCK Headers	0.0525018	meters		0.053	0.053	0.053	0.053	0.053	0.053	0.053
312	O.D. of BLOCK Headers	0.060325	meters		0.060	0.060	0.060	0.060	0.060	0.060	0.060
313	Inside area of BLOCK Headers	2.5136745	square meters		2.514	2.514	2.514	2.514	2.514	2.514	2.514
314	Outside area of BLOCK headers	2.8882326	square meters		2.888	2.888	2.888	2.888	2.888	2.888	2.888
315	Reynolds Number	32778.945		turbulent	32,779	49,168	65,558	81,947	98,337	114,726	131,116
316	Nussult Number (Turbulent Flow)	185		Dittus-Boelter Eqn.	185	255	321	384	444	503	559
317	Nussult Number (Laminar Flow, constant surface temperature)	3.66		Incropera & Dewitt 2nd ed. formula 8.53	3.66	3.66	3.66	3.66	3.66	3.66	3.66
318	Use this value of the Nussult Number	185			185	255	321	384	444	503	559
319	Internal pipe convection coefficient, h = Nussult No * k / D	2073	W/m2	value of h1 in below calculation	2073	2868	3610	4316	4993	5649	6285
320											
321											
322	R, internal convection	0.0002	W/Deg C	equals 1/(h1*2*pi*r1*L)	0.0002	0.0001	0.0001	0.0001	0.0001	0.0001	0.0001
323	R, wall conduction	0.0076	W/Deg C	equals ln (r2/r1) /(2*pi*k of PVC*length of PCV pi	0.0076	0.0076	0.0076	0.0076	0.0076	0.0076	0.0076
324	R, External convection on bare pipe	0.0692	W/Deg C	equals 1/(h2*2*pi*r1*L)	0.0692	0.0692	0.0692	0.0692	0.0692	0.0692	0.0692
325	R, external insulation conduction	0.0854	W/Deg C	equals ln (r2/r1) /(2*pi*k of insulation*length of i	0.0854	0.0854	0.0854	0.0854	0.0854	0.0854	0.0854
326	R, External convection on insulation o.d.	0.0520	W/Deg C	equals 1/(h2*2*pi*r1*L)	0.0520	0.0520	0.0520	0.0520	0.0520	0.0520	0.0520
327											
328	Heat Transfer Rate, Q, from BLOCK Headers, w/o insulation	324	Watts	equals (Tambient - Tair)/Sum R (not including R ins	130	195	260	195	260	325	390
329	Heat Transfer Rate, Q, from BLOCK Headers, with insulation	154	Watts	equals (Tambient - Tair)/Sum R (including R insulat	62	92	123	92	123	154	185
330											
331											
332											
333											
334											
335											

	A	B	C	D	E	F	G	H	I	J	K
336											
337	**Summary of Heat Loads (Far Detector, FD):**			Notes or Comments:							
338											
339	Heat Load per TEC	3	Watts		3	3	3	3	3	3	3
340	Number of TECs	744			744	744	744	744	744	744	744
341	TEC Heat Load	2232	Watts		2232	2232	2232	2232	2232	2232	2232
342											
343	Heat Load from Pump	1119	Watts	based on 1.5 HP Motor	1119	1119	1119	1119	1119	1119	1119
344											
345	Heat Transfer Rate, Q, from TEC Hoses, w/o insulation	2,535	Watts		314	472	629	472	629	786	943
346	Heat Transfer Rate, Q, from TEC Headers, w/o insulation	1,052	Watts		182	273	364	273	364	455	546
347	Heat Transfer Rate, Q, from ROW Headers, w/o insulation	1,946	Watts		26	38	51	38	51	64	77
348	Heat Transfer Rate, Q, from BLOCK Headers, w/o insulation	324	Watts		130	195	260	195	260	325	390
349											
350	Total Heat Load, w/o insulation	9,208	Watts		4,002	4,328	4,654	4,328	4,654	4,980	5,306
351	Total Heat Load w/o insulation	2.62	Tons		1.14	1.23	1.32	1.23	1.32	1.42	1.51
352											
353											
354	Heat Transfer Rate, Q, from TEC Hoses, with insulation	1545	Watts		262	393	525	393	525	656	787
355	Heat Transfer Rate, Q, from TEC Headers, with insulation	532	Watts		125	188	251	188	251	313	376
356	Heat Transfer Rate, Q, from ROW Headers, with insulation	923	Watts		17	25	33	25	33	41	50
357	Heat Transfer Rate, Q, from BLOCK Headers, with insulation	154	Watts		62	92	123	92	123	154	185
358											
359	Total Heat Load, with insulation	6505	Watts		3816	4049	4282	4049	4282	4515	4748
360	Total Heat Load with insulation	1.85	Tons		1.09	1.15	1.22	1.15	1.22	1.28	1.35
361											
362	System Total Flow Rate from Above Calculations	23.6	gpm	from Row 26	23.6	35.4	47.2	59.0	70.8	82.5	94.3
363	System Total Flow Rate from Above Calculations	1.49	liters/second		1.49	2.23	2.98	3.72	4.46	5.21	5.95
364	System Total Flow Rate from Above Calculations	1.48	kg/second	mass flow rate, m dot	1.48	2.23	2.97	3.71	4.45	5.19	5.93
365	C sub P for water	4.1926	kJ/kg-K	Cp	4.1926	4.1926	4.1926	4.1926	4.1926	4.1926	4.1926
366	Bulk Water Temperature Rise From Chiller out to Chiller Return	1.05	C	Formula : Q = m dot * Cp * Delta T, solve for T	0.61	0.43	0.34	0.26	0.23	0.21	0.19
367	Bulk Water Temperature Rise From Chiller out to Chiller Return	1.88	F		1.10	0.78	0.62	0.47	0.41	0.37	0.34
368											
369											
370											
371	**Far Detector Summaries:**			Notes or Comments:							
372	Far Detector Line Sizes:										
373	24 inch long hose (or Pipe) I.d.	0.125	inch								
374	Pipe Size for TEC header on block	0.75	nominal IPS								
375	Pipe Size for ROW header on block	2	nominal IPS								
376	Pipe Size for Block header on block	2	nominal IPS								
377											
378											

	A	B	C	D	E	F	G	H	I	J	K
379	**Far Detector Volume Summaries:**			Notes or Comments:							
380	24 inch hose volume										
381	Combined Length of Supply and Return hoses	4	feet								
382	Number of TEC / Housings per TEC Header	31									
383	Internal area	0.0122718	square inches								
384	24 inch hose volume, total, for all supply and return TEC hoses	438.25218	in3	B382*B381*12*B383*B389*B396*B403							
385	24 inch hose volume, total, for all supply and return TEC hoses	1.8971956	gallons								
386											
387	TEC Header Volume										
388	Combined Length of supply and return TEC headers on block	15	feet								
389	Number of TEC Headers per Row Header	24									
390	Internal area	0.5332665	square inches								
391	TEC Header Volume, total for all TEC Headers	2303.7113	in3	B389*B388*12*B390*B396*B403							
392	TEC Header Volume, total for all TEC Headers	9.9727762	gallons								
393											
394	ROW Header Volume										
395	Combined Length of supply and return ROW headers on block	300	feet								
396	Number of Row Headers per Block Header	1									
397	Internal area	3.355605	square inches								
398	ROW Header Volume, Total for all ROW Headers	12080.178	in3	B396*B395*12*B397*B403							
399	ROW Header Volume, Total for all ROW Headers	52.295143	gallons								
400											
401	Block Header Volume										
402	Combined Length of Block supply and return headers on Detector	15	feet								
403	Number of Block Headers	1									
404	Internal area	3.355605	square inches								
405	Block Header Volume	604.0089	in3	B403*B402*12*B404							
406	Block Header Volume	2.6147572	gallons								
407											
408	Total Piping Volume	66.779872	gallons	B385+B392+B399+B406							
409											

TEMPEST, Inc.
8510 BESSEMER AVE.
Cleveland, OH 44127
PH: 216/883-6500
FX: 216/883-6766
www.tempest-eng.com

February 24, 2010

Mr. William Gilbert
University of Minnesota

RE: Portable Air Cooled Chiller System
TEMPEST Quote No. 1621-0903-R2

Dear Mr. Gilbert,

Further to your request, TEMPEST is pleased to submit our proposal for a 2 ton air cooled chiller. The chiller sizing is based on your request dated 3-2-09 cooling water application.
Please note this change includes 208 V and the refrigerant changes to R410A because R-22 is no longer in use. We have updated this price to include a Gems Ultrasonic level sensor UCL 510.

Price and equipment details are as follows:

Air Cooled Chiller System

MODEL:	TPAC-2
CAPACITY:	1.8 Tons @ leaving water temperature 50 F LWT @ 95 F Ambient
DESIGN FLUID:	Water
DESIGN FLOW RATE:	30 gallons per minute
REFRIGERANT:	R-410A
ELECTRICAL CLASS:	NEMA 1
NO. OF REFRIGERANT CIRCUITS:	One (1)
NO. OF COMPRESSORS:	One (1)

ENCLOSURE: Portable cabinet with stainless steel panels and 3 ½ X 2" casters

DIMENSIONS: 40H X 33W X 46 L WT. 415 lbs.

COMPRESSOR:
- One (1) scroll compressor

EVAPORATOR:
- Direct expansion based on 59 deg F leaving water
- Brazed plate design

CONDENSER:
- Air cooled tube condenser

INSTRUMENTATION:
- Refrigerant pressure controls
- Pressure safety control
- Refrigerant pressure relief valve
- High pressure safety, low pressure freezestat
- Hot gas by-pass capacity control
- Low level with fault contact closure
- Ultrasonic level Sensor UCL 510

FLUID CIRCUIT:
- Close coupled centrifugal pump rated 30GPM, 35 PSI, 1- 1/2 HP @ 3500 RPM, motor
- Polyethylene 25 gallon expansion tank
- Non-ferrous wetted parts, copper, bronze, brass components.
- 1-1/4" FPT process connections

ELECTRICAL SYSTEM: NEMA 12
- Pre-wired electrical system for single point connection rated for 208/230-460/3/60
- Watlow 96A series Microprocessor based temperature control, with 4-20mA remote set point and Universal retransmission 4-20mA.
- Rotary Disconnect
- Remote Start/Stop terminals
- Operator controls
- Pump run contacts
- 19 FLA AMPS @208/230/3/60 and 10 FLA AMPS @ 460/3/60

Unit is shipped with R-410A refrigerant

NET PRICE **$9,885.00 EACH**

DELIVERY TIME	8-10 WEEKS A.R.O.
F.O.B. POINT	CLEVELAND, OH
PAYMENT TERMS	NET 30 DAYS

FEDERAL, STATE AND/OR LOCAL TAXES ARE NOT INCLUDED

We hope the above information is sufficient to enable a favorable view of our proposal. Due to the ever-changing market this price is good for thirty days or units will have to be requoted at time of purchase. If you have any questions and/or concerns, please feel free to call. We look forward to working with you in the near future.

Regards,

TEMPEST, Inc.

Robert T. Hansford
Sales Manager

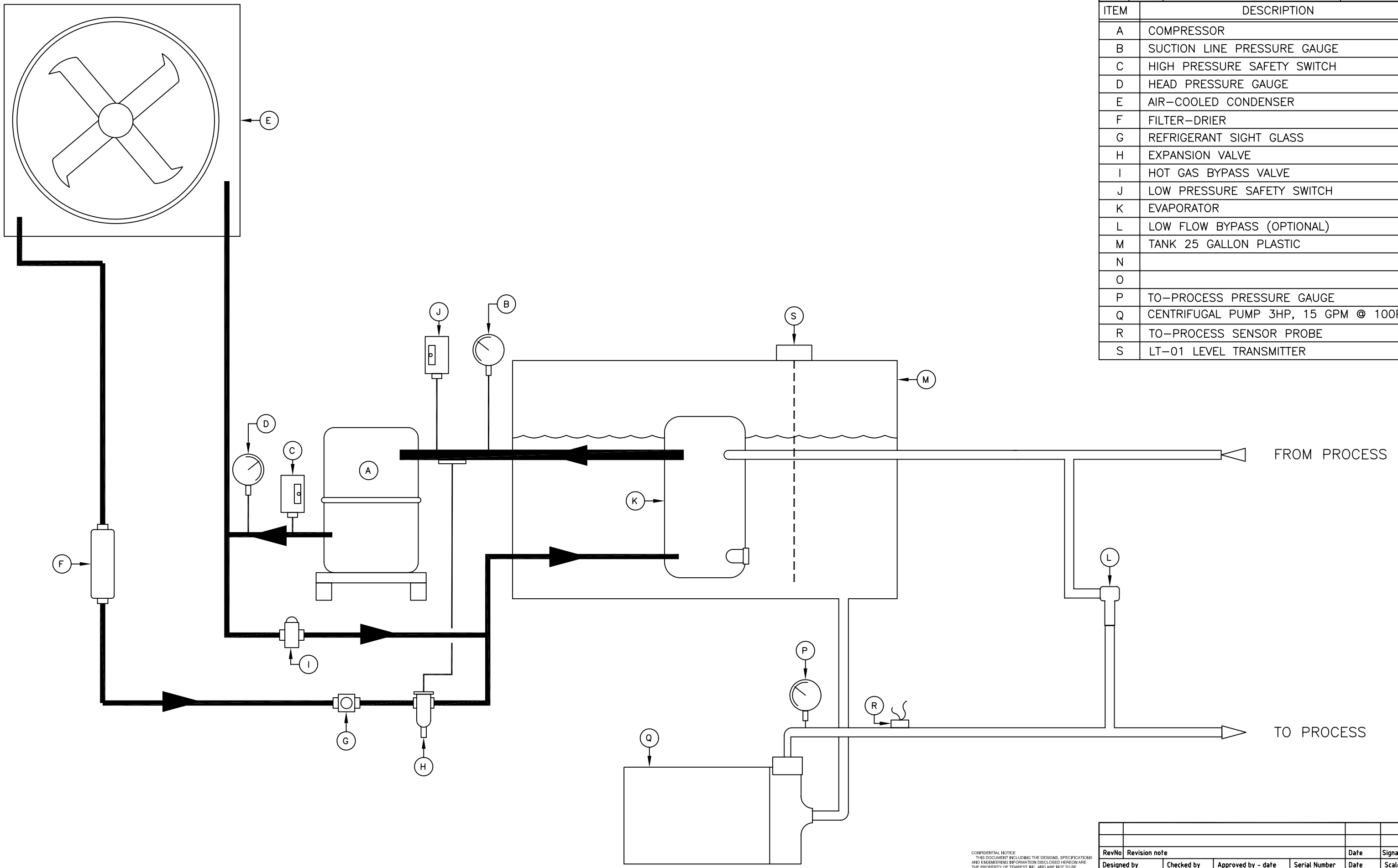

Itemref	Quantity	Title/Name, designation, material, dimension etc	Article No./Reference

ITEM	DESCRIPTION
A	COMPRESSOR
B	SUCTION LINE PRESSURE GAUGE
C	HIGH PRESSURE SAFETY SWITCH
D	HEAD PRESSURE GAUGE
E	AIR–COOLED CONDENSER
F	FILTER–DRIER
G	REFRIGERANT SIGHT GLASS
H	EXPANSION VALVE
I	HOT GAS BYPASS VALVE
J	LOW PRESSURE SAFETY SWITCH
K	EVAPORATOR
L	LOW FLOW BYPASS (OPTIONAL)
M	TANK 25 GALLON PLASTIC
N	
O	
P	TO–PROCESS PRESSURE GAUGE
Q	CENTRIFUGAL PUMP 3HP, 15 GPM @ 100PSI
R	TO–PROCESS SENSOR PROBE
S	LT–01 LEVEL TRANSMITTER

CONFIDENTIAL NOTICE
THIS DOCUMENT INCLUDING THE DESIGNS, SPECIFICATIONS AND ENGINEERING INFORMATION DISCLOSED HEREON ARE THE PROPERTY OF TEMPEST INC. AND ARE NOT TO BE DISSEMINATED OR REPRODUCED WITHOUT EXPRESS WRITTEN CONSENT. THIS DOCUMENT IS LOANED IN CONFIDENCE AND THEN ONLY FOR CONSIDERATION OF THE MATTER HEREON. IN ACCEPTING LOAN OF THIS DOCUMENT, RECIPIENT AGREES TO KEEP IT AND THE MATTER DISCLOSED HEREON IN CONFIDENCE AND NOT TO USE NOR TO PERMIT THERE USE IN ANY WAY DETRIMENTAL TO TEMPEST INC.
8510 BESSEMER AVE. CLEVELAND, OHIO 44127

RevNo	Revision note	Date	Signature	Checked

Designed by	Checked by	Approved by – date	Serial Number	Date	Scale	Type
KBD	JTG	XXX – 00/00/00	1621-0903 R1	04/08/10	1:1	P&ID

TEMPEST

UNIVERSITY OF MINNESOTA

TPAC-2

00PD-1621

Revision	Sheet
0	1/1

Itemref	Quantity	Title/Name, designation, material, dimension etc	Article No./Reference

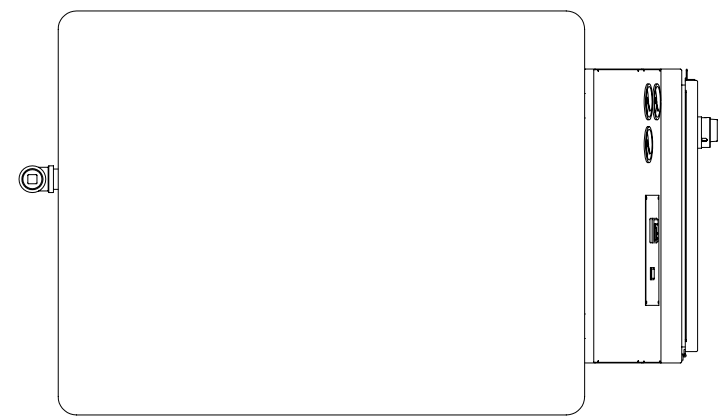

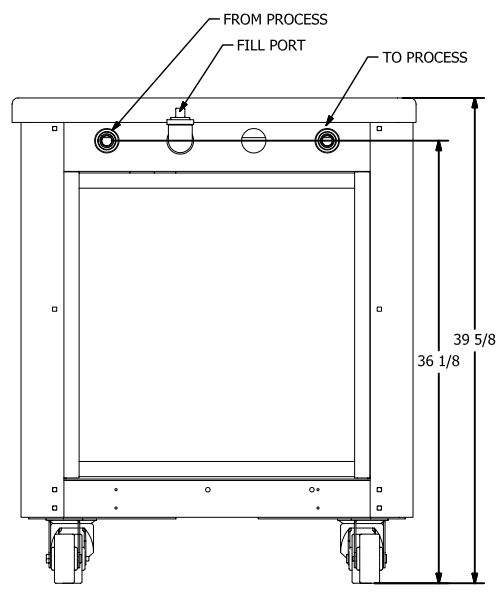

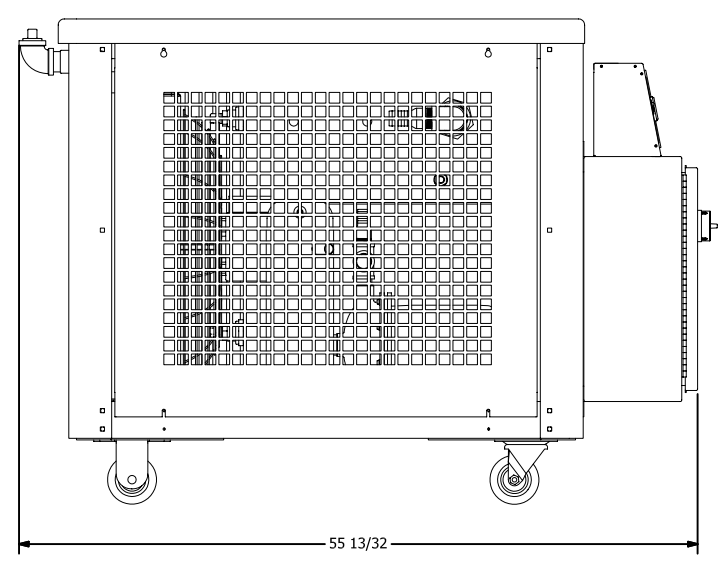

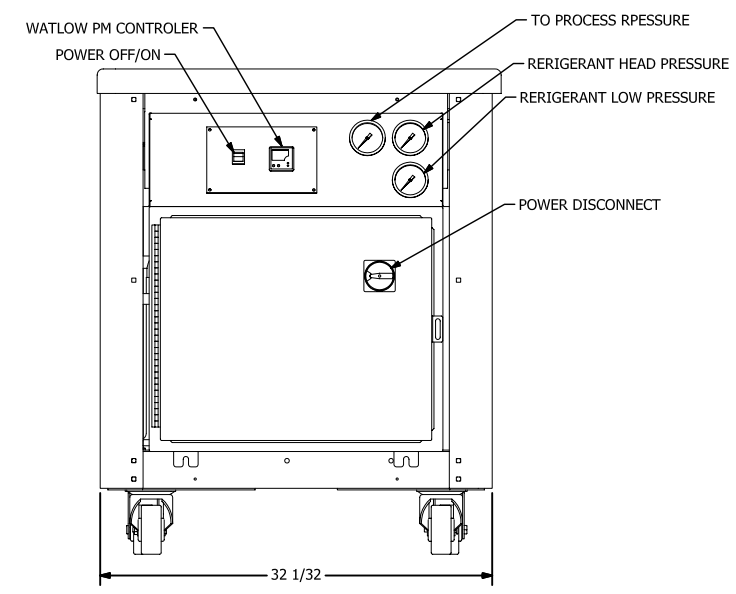

CONFIDENTIAL NOTICE
THIS DOCUMENT INCLUDING THE DESIGNS, SPECIFICATIONS AND ENGINEERING INFORMATION DISCLOSED HEREON ARE THE PROPERTY OF TEMPEST INC. AND ARE NOT TO BE DISSEMINATED OR REPRODUCED WITHOUT EXPRESS WRITTEN CONSENT. THIS DOCUMENT IS LOANED IN CONFIDENCE AND THEN ONLY FOR CONSIDERATION OF THE MATTER HEREON. IN ACCEPTING LOAN OF THIS DOCUMENT, RECIPIENT AGREES TO KEEP IT AND THE MATTER DISCLOSED HEREON IN CONFIDENCE AND NOT TO USE NOR TO PERMIT THERE USE IN ANY WAY DETRIMENTAL TO TEMPEST INC.
8510 BESSEMER AVE. CLEVELAND, OHIO 44127

RevNo	Revision note	Date	Signature	Checked

Designed by	Checked by	Approved by - date	Serial Number	Date	Scale	Type
KBD	JTG	XXX - 00/00/00	1621-0903 R1	04/08/10	1:8	GA

UNIVERSITY OF MINNESOTA

TPAC-2

00GD-1621

Revision	Sheet
0	1/1

Itemref	Quantity	Title/Name, designation, material, dimension etc	Article No./Reference

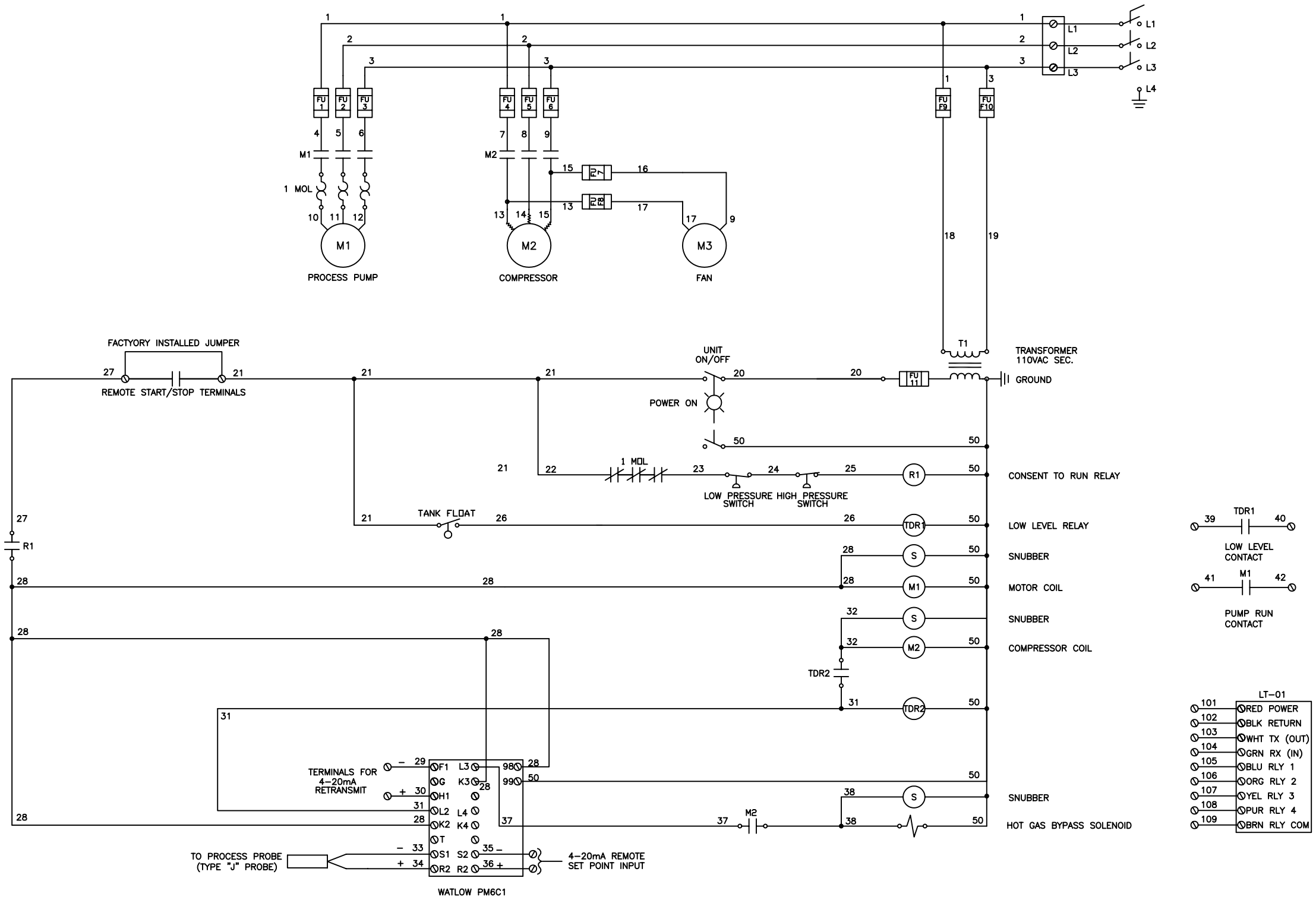

CONFIDENTIAL NOTICE
THIS DOCUMENT INCLUDING THE DESIGNS, SPECIFICATIONS AND ENGINEERING INFORMATION DISCLOSED HEREON ARE THE PROPERTY OF TEMPREST INC. AND ARE NOT TO BE DISSEMINATED OR REPRODUCED WITHOUT EXPRESS WRITTEN CONSENT. THIS DOCUMENT IS LOANED IN CONFIDENCE AND THEN ONLY FOR CONSIDERATION OF THE MATTER HEREON. IN ACCEPTING LOAN OF THIS DOCUMENT, RECIPIENT AGREES TO KEEP IT AND THE MATTER DISCLOSED HEREON IN CONFIDENCE AND NOT TO USE NOR TO PERMIT THERE USE IN ANY WAY DETRIMENTAL TO TEMPREST INC
8510 BESSEMER AVE. CLEVELAND, OHIO 44127

RevNo	Revision note	Date	Signature	Checked

Designed by	Checked by	Approved by - date	Serial Number	Date	Scale	Type
KBD	JTG	XXX - 00/00/00	1621-0903 R1	04/08/10	1:1	ES

TEMPEST

UNIVERSITY OF MINNESOTA

TPAC-2

00ED-1621

Revision	Sheet
0	1/1

Print Report - Scot Division of Ardox Corp.

Company: Tempest

Name: M1-2AHF-W96, Process Pump

Date: 9/11/2007

Pump:

Size: 231-6.3-1.25x1

Type: Stainless
Synch speed: 3600 rpm

Speed: 3500 rpm
Dia: 5.25 in

Curve:

Impeller:

Specific Speeds:

Ns: ---
Nss: ---

Dimensions:

Suction: 1.25 in
Discharge: 1 in

Pump Limits:

Temperature: 250 °F
Pressure: 75 psi g
Sphere size: --- in

Power: --- hp
Eye area: --- in²

Search Criteria:

Flow: 30 US gpm

Head: 79 ft

Fluid:

Water
SG: 1
Viscosity: 1.105 cP

Temperature: 60 °F
Vapor pressure: 0.2563 psi a
Atm pressure: 14.7 psi a

NPSHa: --- ft

Motor:

Standard: NEMA
Enclosure: ODP

Size: 1.5 hp
Speed: 3600
Frame: ---

Sizing criteria: Max Power on Design Curve

---- Data Point ----	
Flow:	30 US gpm
Head:	79.6 ft
Eff:	48%
Power:	1.26 hp
NPSHr:	6 ft

---- Design Curve ----	
Shutoff head:	101 ft
Shutoff dP:	43.7 psi
Min flow:	--- US gpm
BEP:	50% @ 40 US gpm
NOL power:	1.45 hp @ 50 US gpm

-- Max Curve --	
Max power:	3.38 hp @ 70 US gpm

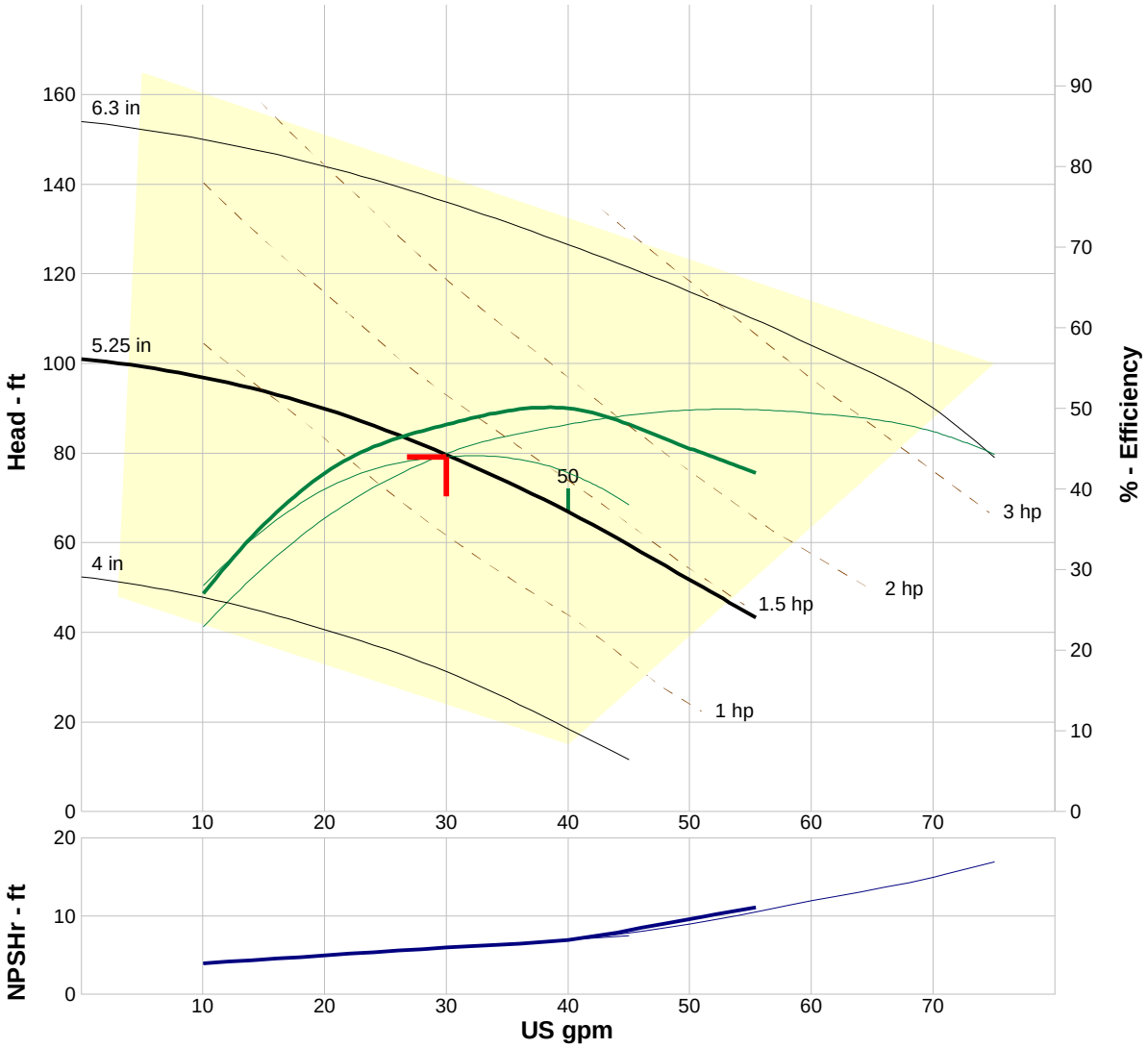

Performance Evaluation:

Flow US gpm	Speed rpm	Head ft	Efficiency %	Power hp	NPSHr ft
36	3500	72	49	1.31	6.6
30	3500	79.6	48	1.26	6
24	3500	85.8	44	1.15	5.4
18	3500	91.3	39	1.05	4.8
12	3500	95.5	30	0.941	4.2

Selected from catalog: Scot.60 Vers: 6.9

Beswick Engineering
MH-1332-031 or equivalent
10-32 brass O-ring boss to hose barb
5/16 in across hex flats
.031 inch orifice, +/- 0.001

Colder Products
valved disconnect insert
PMCD2202 or equivalent

Crimped ferrules

Armstrong Industrial Hose
Type RB-3 or equivalent
1/8in ID, 5/16in OD, EPDM rubber,
w/polyester overbraid

Pressure rating of assembly should be 120 PSI or better

TITLE NOVA Heatsink Hose Assy rev 2	Univ of Minnesota Physics 116 Church St SE Minneapolis MN 55455
DRAWN BY W Gilbert DATE 4/19/2010	
	SHEET 1 OF 1

ASHCROFT®

Bimetal Thermometer Series EL, ASME B40.3 Grade A (±1% of span)

- ***Silicone liquid filled***
- ***External adjustment***
- ***Durable polycarbonate window***
- ***Maxivision® dial***
- ***±1% full-span accuracy (ASME B40.3 Grade A)***
- ***All-welded stainless steel construction***
- ***Limited five-year warranty***

This series – liquid filled – is available in 3″ rear, 5″ rear and 5″ Everyangle™ connections. The external adjustment is standard.

The Ashcroft® liquid-filled thermometer provides the same features as the EI style with the added benefit of liquid filling.

The potential wear problem caused by excessive vibration is minimized through dampening and the instrument life is prolonged. The liquid medium also improves readability.

IN A RUSH? ASK FOR ASHCROFT GOLD SERVICE

SELECTION TABLE

Case Size		Style Code	Stem				Stem Lengths Available		Temperature Range					
Dial	Code		Connection	Code	Location	Code	"S" Length (inches)	Code	°F* Fahrenheit	°/Div.	Fig. Inter.	°C Celsius	°/Div.	Fig. Inter.
3″	30	EL	½ NPT	60	Rear	R	2½	025	–40/160	2	20	–20/120	2	20
							4	040	–20/120†	2	20	–10/110	2	10
							6	060	30/130†	1	10			
5″	50		½ NPT Union	42	Everyangle	E	9	090	0/200	2	20	0/50†	1	5
							12	120	0/250	2	50	0/100	1	10
			½ NPT	60			15	150	50/300	2	50	10/150	2	20
							18	180	50/550	5	50	0/300	5	50
			½ NPT	60	Rear	R	24	240						

*Dual scale ranges available for all standard °F ranges.
†Minimum stem length for Everyangle connection is 4″.
•Use Ashcroft Duratemp® thermometers for ranges above and below those listed above.

•Thermowells must be used on all pressure or velocity applications, to protect the stem of thermometer from corrosion and physical damage, and to facilitate removal of the thermometer without disturbing the process. Maximum ambient temperature is 150°F (65°C).

Overtemperature Limits	
Top of Range °F	Maximum Overtemperature
up to 160	100% of span
160/300	300°F
300/550	550°F

TO ORDER THIS EL SERIES BIMETAL THERMOMETER:

Select: 30 EL 60 R 040 0/250°F XNH

1. Case Size: 3″ Code 30
2. Style: Code EL
3. Stem Conn: ½ NPT Code 60
4. Stem Location: Rear Code R
5. Stem Length: 4″ Code 040
6. Range: Code 0/250°F
7. Options: Stainless Steel Tag (see Page 210)

Consult factory for guidance in product selection
Phone (203) 385-0217, Fax (203) 385-0602 or
visit our web site at www.ashcroft.com

MADE IN U.S.A.

KING INSTRUMENT COMPANY

When it comes to flow...we're instrumental.

7200 Series - Acrylic

A real value in general purpose rotameters. Now available with 8 new, lower flow ranges.
Vertical connections are from 3/8" NPT to 2" NPT.

Description

Metering Tube
Machined Cast Acrylic

Internal Components
316L Stainless Steel

Inlet/Outlet Fittings
NPT, Vertical

Fitting Material
Standard: PVC (not for air service)
Optional: 316 Stainless Steel, Brass, Aluminum

Elastomers
Standard: EPR
Optional: Buna-N, Viton®

Options

Certified Calibrations
Conform to ISA RP 16.6

Scales
Can be produced in any volumetric unit

Liquid Compatible

Gas Compatible

Performance

Capacities
1 to 200 GPM — Water
4 to 245 SCFM — Air

Scale
127 mm (5") Direct reading

Accuracy
± 3% to ± 6% of Full Scale Flow
See Specifications Table

Turndown
10:1 to 12.5:1 unless otherwise indicated

Repeatability
1% to 2% See Specifications Table

Max Temperature
Water — 130° F (54° C)
Air — 100° F (38° C)

Max Pressure
Water — 150 psig
Air — 100 psig

Ambient Temperature
33° F to 125° F (1° C to 52° C)

Caution: Meters used in gas service are designed to operate at 14.7 psia. Meters used in pressure gas service must be shielded using 3/8" polycarbonate to protect personnel and equipment in the event of tube failure.

Materials Of Construction

Part	Standard	Optional
Meter Tube	Acrylic	—
Fittings	PVC*	Brass, 316L SS, Aluminum
Float	316L SS	—
Guide Rod	316L SS	—
Float Stops	Polysulfone	Stainless Steel
O-rings	EPR	Viton®, Buna-N

*Not for air service

Specifications

Order Number	Flow GPM - Water	Flow SCFM - Air	F.S. Accuracy± / Repeatability	Press. Drop (In. / W.C.)	Connection Size	Dimensions A	Dimensions B
0051	1	4	3% / 2%	2.9	3/8" FNPT	1.375"	8.25"
0052	1	4	3% / 2%	2.9	1/2" FNPT	1.375"	8.25"

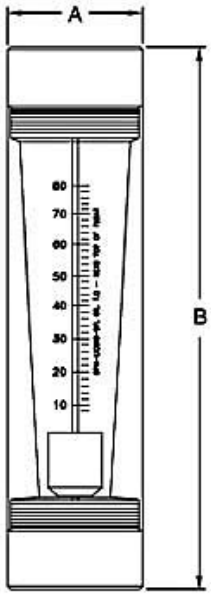

0061	2	8	3% / 2%	5.2	3/8” FNPT	1.375”	8.25”
0062	2	8	3% / 2%	5.2	1/2” FNPT	1.375”	8.25”
0071	3.5	14	3% / 2%	9.5	3/8” FNPT	1.375”	8.25”
0072	3.5	14	3% / 2%	9.5	1/2” FNPT	1.375”	8.25”
0081	5	20	3% / 2%	13.1	3/8” FNPT	1.375”	8.25”
0082	5	20	3% / 2%	13.1	1/2” FNPT	1.375”	8.25”
0151	5	20	3%/1%	10	1” FNPT	2.000”	10.25”
0161	10	43	3%/1%	12	1” FNPT	2.000”	10.25”
0171	15	62	3% / 1%	18	1” FNPT	2.000”	10.25”
0181	21	86	3% / 1%	22	1” FNPT	2.000”	10.25”
0191	30.5	—	3% / 1%	26	1” FNPT	2.000”	10.25”
0201	40	—	6% / 2%	32	1 1/2” MNPT	2.000”	12.06”
0211	50	—	6% / 2%	38	1 1/2” MNPT	2.000”	12.06”
0221	40	165	4% / 1%	18	2” FNPT	3.000”	13.25”
0231	60	245	4% / 1%	25	2” FNPT	3.000”	13.25”
0241	80	—	4% / 1%	30	2” FNPT	3.000”	13.25”
0251	100*	—	4% / 1%	35	2” FNPT	3.000”	13.25”
0261	120*	—	6% / 2%	45	2” FNPT	3.000”	13.25”
0271	160*	—	6% / 2%	60	2” FNPT	3.000”	13.25”
0281	200*	—	6% / 2%	80	2” FNPT	3.000”	13.25”

*** These meters have less than 10:1 turndown.**

Order Number	Flow Range	Actual Turndown
0251	20 - 100 GPM	5:1
0261	30 - 120 GPM	4:1
0271	45 - 160 GPM	3.55:1
0281	55 - 200 GPM	3.63:1

Max. Pressure		Max. Temperature	
Water	Air	Water	Air
150 psig	100 psig	130° F	100° F

Ordering:

Use the following guide to determine the specific product number you require.

7 2 0 5	☐☐☐☐	☐	☐	☐
Meter Series	**Order number**	**Fitting Material**	**O-Ring Material**	**Fluid To Be Metered**
	From specifications table	Brass - 1	EPR - 1	GPM – Liquid - W
		316 SSL - 2	Buna-N - 2	SCFM – Air - A
		PVC - 3	Viton® - 3	
		Aluminum - 6		

Example: 7205 - 0281 - 3 - 1 - W

Download Product Specifications in PDF Format

PVC Ball Valves

One-Piece Molded PVC Body • Threaded or Socket Ends

150 PSI/10.3 Bar Non-Shock Cold Working Pressure to 73° F/23° C
NSF Listed to NSF/ANSI 14

4660-S
Socket Weld

4660-T
Threaded
(not shown)

MATERIAL LIST

PART	SPECIFICATION
1. Handle Cap	ABS
2. Screw	Zinc Plated Steel
3. Handle	ABS
4. O-Ring	EPDM
5. Seat Seal	PTFE, EPDM
6. Ball	PVC
7. Body	PVC

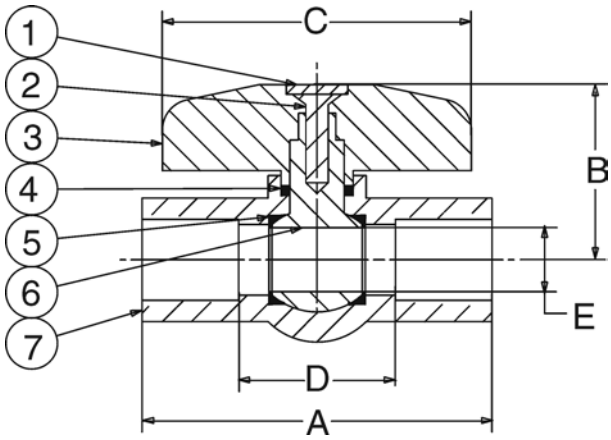

4660-S
Socket x Socket

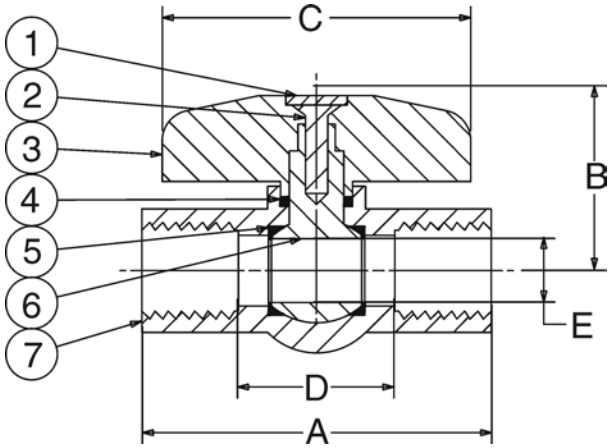

4660-T
Threaded x Threaded

DIMENSIONS—WEIGHTS—QUANTITIES

Size		Dimensions A		B		C		D		E		4660-S		4660-T	
In.	mm.	In.	mm.	In.	mm.	In.	mm.	In.	mm.	In.	mm.	Lbs.	Kg.	Lbs.	Kg.
½	15	3.27	83	1.69	42	2.76	70	1.52	39	0.55	14	0.17	0.08	0.18	0.08
¾	20	3.74	95	2.13	54	3.46	88	1.74	44	0.79	20	0.30	0.14	0.32	0.14
1	25	4.17	106	2.56	65	3.94	100	1.92	49	0.98	25	0.47	0.21	0.51	0.23
1 ¼	32	4.49	114	2.64	67	3.94	100	1.99	50	1.18	30	0.58	0.26	0.63	0.29
1 ½	40	5.12	130	3.07	78	4.29	109	2.37	61	1.42	36	0.91	0.41	0.97	0.44
2	50	5.79	147	3.50	89	5.28	134	2.79	71	1.83	46	1.50	0.68	1.60	0.73
2 ½	65	8.03	204	4.13	105	7.01	178	4.53	115	2.36	60	2.78	1.26	2.93	1.33
3	80	9.01	229	4.88	124	8.82	224	5.27	134	3.03	77	4.05	1.84	4.33	1.97
4	100	11.81	300	5.83	148	10.87	276	7.31	197	3.98	101	8.18	3.92	8.44	3.84

Note: Socket ends per ASTM D 2466
Thread ends per ANSI B1.20.1

NIBCO INC. WORLD HEADQUARTERS • 1516 MIDDLEBURY ST. • ELKHART, IN 46516-4740 • USA • PH: 1.800.234.0227
TECH SERVICES PH: 1.888.446.4226 • FAX: 1.888.336.4226 • INTERNATIONAL OFFICE PH: +1.574.295.3327 • FAX: +1.574.295.3455
www.nibco.com

Flow-Max® Pleated Cartridges For Reduced Filtration Costs

Get more filtration for the money with Flow-Max® pleated cartridges for high flow, long life, greater sediment removal and reduced filtration costs.

Flow-Max filter cartridges outperform wound, spun, melt blown, resin bonded and other "depth" type filter elements because our cartridges are pleated to provide increased surface area and longer life.

Lower pressure drop is another significant advantage, using Flow-Max pleated cartridges, which allows for increased flow rates and the use of smaller filter housings to reduce capital equipment costs.

Further savings are provided because our 100% synthetic filter media is cleanable, five micron and up, to lower cartridge replacement costs.

Flow-Max filter cartridges outperform other pleated elements because our high-performance filter media is systematically produced using 100% synthetic fibers, with no binders or additives to leave a residue, foam or contaminate.

Our filter media is dramatically thicker than other products. For this reason, Flow-Max cartridges provide "depth" filtration for greater sediment removal, along with more surface area with our pleated design.

A multi-ply laminate is used with our sub and one micron absolute grades for longer life and greater solids removal. (See right.)

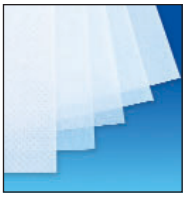

Features

Filter media is pleated for greater surface area.

Synthetic filter media is cellulose-free.

"Thicker" filter media has a greater capacity to capture and retain particles, compared to thin, more rigid media types, which have less void space for particle retention.

One micron absolute and 0.35 media use a multi-ply laminate for superior performance.

Long lengths have netting to hold pleats in place.

All cartridge types and lengths are wrapped.

Full product line (types, lengths & micron ratings).

Benefits

Low pressure drop; long life; reduced filtration costs, compared to wound and spun cartridges.

No additives or binders, which may cause foaming.

Increased dirt holding capacity; longer life; fewer cartridge replacements needed; and reduced filtration costs, compared to other pleated cartridge suppliers.

Increased particle removal efficiency; longer life; and reduced cost per gallon filtered.

Superior performance and appearance.

Provides security at no additional cost.

Greater selection from your single source supplier!

Flow-Max® cartridges cost less to use . . . regardless what they cost to buy!

Lower pressure drop for higher flow rates

Flow-Max® cartridges are pleated, so initial pressure drop is significantly less compared to depth cartridges, such a wound, spun, melt blown and resin bonded. As a result, higher flow rates are possible, reducing filter housing size requirements to lower capital equipment costs.

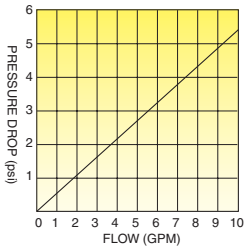

Depth cartridge
(5 micron)

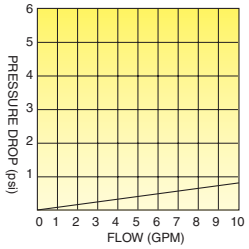

Flow-Max® cartridge
(5 micron)

Use the pressure drop charts shown below to help determine the ideal flow rate for your particular application:

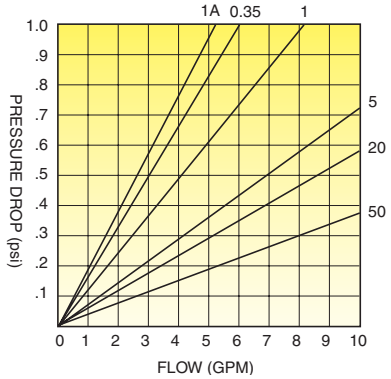

Standard cartridges (9-3/4")

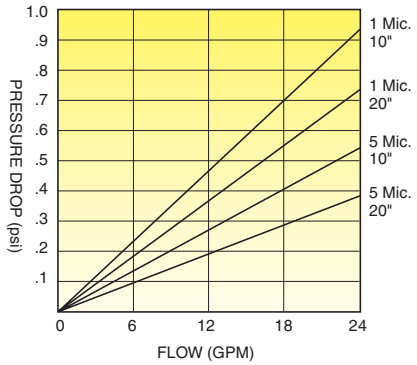

Full-Flow (B-B) cartridges

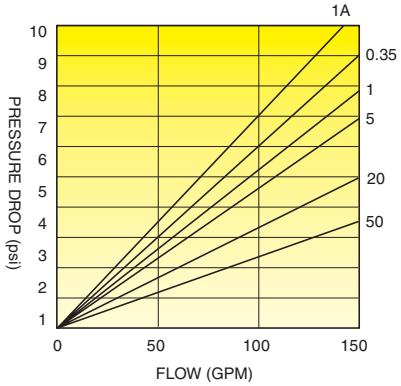

Jumbo cartridges

Note: Pressure drop data shown above include filter housing and cartridge.

Flow rates

Maximum flow rate guidelines for Flow-Max cartridges are shown below:

Micron Rating	Maximum Flow Rates Per Cartridge (GPM)							
	Standard Cartridge			10" Full-Flow	20" Full-Flow	Jumbo Cartridge		
	9-3/4"	20"	29-1/4"			40	90	170
1 Absolute	3	6	9	8	12	20	40	80
0.35 Micron	4	8	12	9	13	25	50	100
1 Micron	4	8	12	10	15	30	60	120
5 Micron	7	14	21	15	25	50	100	150
20 Micron	8	16	24	15	25	50	100	150
50 Micron	10	20	30	15	25	50	100	150

Note: Filter housing selection should also be considered when flow rate per cartridge is determined.

Washable & reusable

Flow-Max® cartridges are washable and reusable, five micron and up to reduce filtration costs. For best results, direct spray into pleats to dislodge sediment. Or, let dry and brush off filter cake from surface of the media.

All Flow-Max® cartridges are individually shrink wrapped for purity

Flow-Max® Standard 2-3/4” OD Cartridges

With cellulose-free filter media for water filtration applications

Standard 2-3/4” OD x 9-3/4” length

Product Code	Media Type	Micron Rating	Number Per Case
FM-1A-975	Synthetic	1 Absolute	24
FM-0.35-975	Synthetic	0.35	24
FM-1-975	Synthetic	1	24
FM-5-975	Synthetic	5	24
FM-20-975	Synthetic	20	24
FM-50-975	Synthetic	50	24
FM-100-975	Synthetic	100	24

Standard 2-3/4” OD x 19-1/2” length

Product Code	Media Type	Micron Rating	Number Per Case
FM-1-195	Synthetic	1	24
FM-5-195	Synthetic	5	24
FM-20-195	Synthetic	20	24
FM-50-195	Synthetic	50	24

Standard 2-3/4” OD x 20” length

Product Code	Media Type	Micron Rating	Number Per Case
FM-1A-20	Synthetic	1 Absolute	24
FM-0.35-20	Synthetic	0.35	24
FM-1-20	Synthetic	1	24
FM-5-20	Synthetic	5	24
FM-20-20	Synthetic	20	24
FM-50-20	Synthetic	50	24

Standard 2-3/4” OD x 29-1/4” length

Product Code	Media Type	Micron Rating	Number Per Case
FM-1A-2925	Synthetic	1 Absolute	24
FM-0.35-2925	Synthetic	0.35	24
FM-1-2925	Synthetic	1	24
FM-5-2925	Synthetic	5	24
FM-20-2925	Synthetic	20	24
FM-50-2925	Synthetic	50	24

Standard 2-3/4” OD x 40” length

Product Code	Media Type	Micron Rating	Number Per Case
FM-1-40	Synthetic	1	24
FM-5-40	Synthetic	5	24
FM-20-40	Synthetic	20	24
FM-50-40	Synthetic	50	24

Specifications

Filter media	Synthetic (100% cellulose-free)
End caps	Plastisol (PVC)
Center tubes	Polypropylene
Temperature range	40°F - 140°F (4.4°C - 60°C)
Maximum Pressure	40 PSID
Recommended change out	20 - 30 PSID
Flow rate per 10” cartridge	3-10 GPM, depending on micron rating

Flow-Max® Full-Flow Cartridges

4-1/2" OD cartridges with cellulose-free filter media for water filtration applications

One micron absolute rated and 0.35 nominal micron cartridges

Ideal for water filtration to remove Cryptosporidium and Giardia cysts. Both grades utilize a multi-ply filter media for greater retention efficiencies and long life.

Full-Flow (B-B) 4-1/2" OD x 9-3/4" length

Product Code	Length	Media Type	Micron Rating	Number Per Case
FM-BB-10-1A	9-3/4"	Synthetic	1 Absolute	8
FM-BB-10-0.35	9-3/4"	Synthetic	0.35	8
FM-BB-10-1	9-3/4"	Synthetic	1	8
FM-BB-10-5	9-3/4"	Synthetic	5	8
FM-BB-10-20	9-3/4"	Synthetic	20	8
FM-BB-10-50	9-3/4"	Synthetic	50	8

Note: Cartridges listed above fit in Full-Flow and Big-Blue® filter housings.

Full-Flow (B-B) 4-1/2" OD x 20" length

Product Code	Length	Media Type	Micron Rating	Number Per Case
FM-BB-20-1A	20"	Synthetic	1 Absolute	4
FM-BB-20-0.35	20"	Synthetic	0.35	4
FM-BB-20-1	20"	Synthetic	1	4
FM-BB-20-5	20"	Synthetic	5	4
FM-BB-20-20	20"	Synthetic	20	4
FM-BB-20-50	20"	Synthetic	50	4

Note: Cartridges listed above fit in Full-Flow and Big-Blue® filter housings.

Specifications (synthetic media for sediment)

Maximum temperature	140°F (60°C)	Center tubes	PVC
Minimum temperature	40°F (4.4°C)	End caps	Molded urethane
Maximum pressure	40 PSID	Maximum flow rate, model 40	50 GPM (12M³HR)
Recommended change out	25-30 PSID	Maximum flow rate, model 90	100 GPM (24M³HR)
Filter media	PE & PP	Maximum flow rate, model 170	150 GPM (36M³HR)

Flow-Max® Jumbo Filter Cartridges

With cellulose-free filter media for water filtration applications

Standard Synthetic Media

Flow-Max jumbo filter cartridge

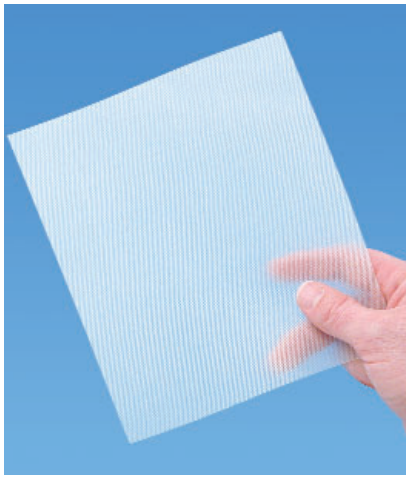

PP Mesh Media

Model 40

Filter Housing Model Number	Micron Rating	Product Code with Synthetic Media	Product Code with Mesh Media	Number Per Case
40	1 Absolute	FMHC-40-1A	N. A.	1
	0.35	FMHC-40-0.35	N. A.	1
	1	FMHC-40-1	N. A.	1
	5	FMHC-40-5	N. A	1
	20	FMHC-40-20	N. A.	1
	50	FMHC-40-50	FMJC-40-50M	1
	100	FMHC-40-100	N. A.	1
	150	N. A.	FMJC-40-150M	1

Model 90

Filter Housing Model Number	Micron Rating	Product Code with Synthetic Media	Product Code with Mesh Media	Number Per Case
90	1 Absolute	FMHC-90-1A	N. A.	1
	0.35	FMHC-90-0.35	N. A.	1
	1	FMHC-90-1	N. A.	1
	5	FMHC-90-5	N. A	1
	20	FMHC-90-20	N. A.	1
	50	FMHC-90-50	FMJC-90-50M	1
	100	FMHC-90-100	N. A.	1
	150	N. A.	FMJC-90-150M	1

Model 170

Filter Housing Model Number	Micron Rating	Product Code with Synthetic Media	Product Code with Mesh Media	Number Per Case
170	1 Absolute	FMHC-170-1A	N. A.	1
	0.35	FMHC-170-0.35	N. A.	1
	1	FMHC-170-1	N. A.	1
	5	FMHC-170-5	N. A	1
	20	FMHC-170-20	N. A.	1
	50	FMHC-170-50	FMJC-170-50M	1
	100	FMHC-170-100	N. A.	1
	150	N. A.	FMJC-170-150M	1

Flow-Max®
Phenolic Impregnated Cellulose Cartridges

For Industrial Hot Water & Non-Aqueous Applications

Applications

- High temperature industrial water filtration
- Lubricating oil
- Cutting fluids
- Solvents
- Distillate fuel
- Fuel oil
- Hydraulic fluids

Specifications	Data
Maximum temperature	250˚F (121˚C)
Minimum temperature	-20˚F (-29˚C)
Maximum pressure	70 PSID (482 k PA)
Recommended change out	25 PSID (172 k PA)
Media	Phenolic impregnated cellulose
End caps, cores, outer body	Electro plated tin

Jumbo Model 40 (7-3/4” x 9-5/8”) for flow rates to 50 GPM

Part Number	Model Number	Length	Micron	No. / case
FMPIC-40-5-HT	40	9-5/8”	5	1
FMPIC-40-20-HT	40	9-5/8”	20	1
FMPIC-40-50-HT	40	9-5/8”	50	1

Jumbo Model 90 (7-3/4” x 19-1/2”) for flow rates to 100 GPM

Part Number	Model Number	Length	Micron	No. / case
FMPIC-90-5-HT	90	19-1/2”	5	1
FMPIC-90-20-HT	90	19-1/2”	20	1
FMPIC-90-50-HT	90	19-1/2”	50	1

Jumbo Model 170 (7-3/4” x 30-3/4”) for flow rates to 150 GPM

Part Number	Model Number	Length	Micron	No. / case
FMPIC-170-5-HT	170	30-3/4”	5	1
FMPIC-170-20-HT	170	30-3/4”	20	1
FMPIC-170-50-HT	170	30-3/4”	50	1

Note: Jumbo 40. 90 and 170 cartridges listed above fit in Flow-Max housings only. Phenolic impregnated cellulose cartridges are not cleanable or reusable; and they are not suitable for potable water.

Flow-Max® HP Series Cartridges

100% polypropylene construction with efficiencies to 99.98%.

High efficiency pleated cartridges

Flow-Max HP series cartridges are cost efficient, disposable filter elements for a wide range of applications. Constructed entirely of polypropylene, they are ideally suited for critical filtration, including high purity water and aggressive chemicals.

Applications

- High purity water
- Pre-filtration for RO
- Plating solutions
- Inks
- Bottled water
- Rinse water for electronics
- Edible oils
- Traps for DI resin

Initial pressure drop per 10" cartridge

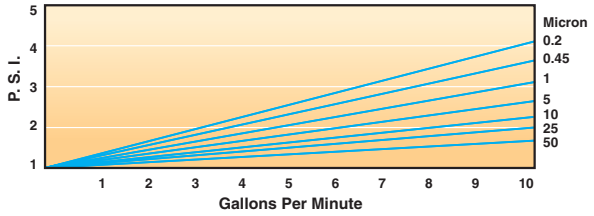

Product codes

Part Number	Micron	Length	End Cap	Number / Case	Ship Wt. (lbs.)
FPP-0.2-975-DOE	0.2	9-3/4"	DOE	24	12
FPP-0.2-20-DOE	0.2	20"	DOE	12	11
FPP-0.2-30-DOE	0.2	30"	DOE	12	17
FPP-0.2-40-DOE	0.2	40"	DOE	12	21
FPP-0.2-10-222	0.2	10"	222 / Flat	24	12
FPP-0.2-20-222	0.2	20"	222 / Flat	12	11
FPP-0.2-30-222	0.2	30"	222 / Flat	12	17
FPP-0.2-40-222	0.2	40"	222 / Flat	12	21
FPP-0.2-10-222F	0.2	10"	222 / Fin	24	12
FPP-0.2-20-222F	0.2	20"	222 / Fin	12	11
FPP-0.2-30-222F	0.2	30"	222 / Fin	12	17
FPP-0.2-40-222F	0.2	40"	222 / Fin	12	21
FPP-1-975-DOE	1	9-3/4"	DOE	24	12
FPP-1-20-DOE	1	20"	DOE	12	11
FPP-1-30-DOE	1	30"	DOE	12	17
FPP-1-40-DOE	1	40"	DOE	12	21
FPP-1-10-222	1	10"	222 / Flat	24	12
FPP-1-20-222	1	20"	222 / Flat	12	11
FPP-1-30-222	1	30"	222 / Flat	12	17
FPP-1-40-222	1	40"	222 / Flat	12	21

Additional micron ratings and types are available. Please inquire.

Flow-Max® Filters

MADE IN U.S.A.

Distributed by:

WATTS®

WATER QUALITY & CONDITIONING PRODUCTS

Flow-Max® Filters

Top quality stainless steel filter housings and a full range of pleated cartridges for liquid filtration applications.

Flow-Max® Filter Housings & Cartridges Provide High Performance and Reduce Filtration Costs

Check out these many features and benefits:

- ***100% stainless steel for durability.***
- ***All stainless steel construction.***
- ***Convenient band clamp lid closure is standard for easy cartridge replacement.***
- ***Pipe fittings are readily accessible for easy installation.***
- ***Adjustable top plate accepts variable length cartridges for more options.***
- ***Two drains provided for clean and dirty fluids.***
- ***Legs and mounting tabs are available.***

- ***Knife edge seals are provided at both ends of all DOE cartridges for superior performance.***
- ***Rated for temperatures to 250° F. (No plastic holding rods.)***
- ***Pressure rating to 150 psi.***
- ***Housings for pressures to 300 psi are available.***
- ***Optional sanitary connections.***
- ***Models to accept DOE, 222 and cartridges with 226 end caps.***
- ***Protective poly-coat over stainless steel standard finish.***
- ***Electo-polishing is available.***
- ***Standard, Premium Series and Jumbo models are in stock for immediate shipment.***

Specifications

Material:	Multi-cartridge and Jumbo filter housings are constructed using stainless steel.
Pressure rating:	Housings are rated for pressures to 150 psi (10 bar). 300 psi pressure rating is available.
Temperature:	Filters are rated for temperatures to 250° F (121° C). Please consider cartridges to be used.
Gaskets & seals:	Buna-N is standard. Viton, EDPM and Teflon are available.
Finish:	Protective poly-coat over stainless is standard finish. Electro-polishing available.
Pressure drop:	Initial pressure drop is <1 psi at designed flow rates for housings only.
Cartridge types:	Housings are designed to accept DOE cartridges. Adapters for 222 & 226 cartridges available.

Models

4 & 5 round models

7 round

12 round

22 round

Premium Series

Standard multi-cartridge filter housings

Heavy-duty housings in stainless steel, rated for pressures to 150 psi and temperatures to 250°F. Filters accept DOE cartridges, with optional adapters for 222 and 226 elements available. Bolt-on tabs for 4 & 5 round housings available for skid mounting.

Model	Max. Flow	Std. Cartridge	Pipe Size	Drain Size
FM4X1-1	30 GPM	9-3/4” or 10”	1” NPT	1/2” NPT
FM5X1	30 GPM	9-3/4” or 10”	2” NPT	1/2” NPT
FM4X2	60 GPM	20”	2” NPT	1/2” NPT
FM4X3	90 GPM	29-1/4” or 30”	2” NPT	1/2” NPT
FM4X4	120 GPM	40” (or two 20” per rod)	2” NPT	1/2” NPT
FM5X4	150 GPM	40” (or two 20” per rod)	2” NPT	1/2” NPT
FM12X3	250 GPM	29-1/4” or 30”	3” flange	1/2” NPT
FM12X4	300 GPM	40” (or two 20” per rod)	3” flange	1/2” NPT
FM22X3	500 GPM	29-1/4” or 30”	4” flange	1/2” NPT
FM22X4	600 GPM	40” (or two 20” per rod)	4” flange	1/2” NPT

Premium Series

Heavy-duty housings in stainless steel with mounting legs and pressure gauges pre-installed on inlet and outlet fittings. Rated for pressures to 150 psi and temperatures to 250°F.

Model	Max. Flow	Std. Cartridge	Pipe Size	Drain Size
FMPS4X2	60 GPM	20”	2” NPT	1/2” NPT
FMPS5X3	120 GPM	29-1/4” or 30”	2” NPT	1/2” NPT
FMPS5X4	150 GPM	40” (or two 20” per rod)	2” NPT	1/2” NPT
FMPS7X4	200 GPM	40” (or two 20” per rod)	2” NPT	1/2” NPT

Legs and pressure gauges are standard.

Single cartridge housing (Rated for 250°F and 250 psi)

Models with nickel plated brass heads & 304 sumps; all 304; and all 316 housings for cartridges with o-ring style end caps.

Model	Cartridge	Pipe	Head	Sump
FM10-BN-304-34T*	10” (9-3/4” rigid)	3/4”	BN	304
FM20-BN-304-34T*	20”	3/4”	BN	304
FM30-BN-304-34T*	30”	3/4”	BN	304
FM10-304-34	10” (9-3/4” rigid)	3/4”	304	304
FM20-304-34	20”	3/4”	304	304
FM10-316-34-222	10” with 222	3/4”	316	316
FM20-316-1-222	20” with 222	1”	316	316

*T-handle cap nut included for sump removal.

Flow-Max Jumbo Cartridge filters

Compression cap

Jumbo cartridges

Jumbo Cartridge Filter Housings

The ideal filter housings for convenience and savings, in all stainless steel. Single cartridge is easy to install, easy to remove and they are washable and reusable, five micron and up! Housings come with band clamp lid closure, mounting legs, pressure gauges installed on inlet and outlet fittings and compression cap for superior sealing. Housings are rated for pressures to 150 psi. Standard cartridges are rated for temperatures to 140° F.

Model	Max. Flow	Cartridge	Pipe Size
FMJCH40	50 GPM	1 “40”	2” NPT
FMJCH90	100 GPM	1 “90”	2” NPT
FMJCH170	150 GPM	1 “170”	2” NPT
FMJCH3X170	450 GPM	3 “170”	4” flange
FMJCH5X170	750 GPM	5 “170”	6” flange
FMJCH8X170	1200 GPM	8 “170”	8” flange

Warranty: Flow-Max housings come with a limited warranty for one year from date of installation. Optional electro-polishing available for aggressive and high TDS water.

Note: Seven (7) round premium series housings accept DOE and 222 cartridges without the need for special adapters.

Flow-Max® stainless steel filters for standard and “jumbo” cartridges.

Flow-Max pleated cartridges

We offer a wide range of filter housings, which accept standard 2-3/4” OD cartridges, or one single “jumbo” cartridge to provide optimum convenience.

Either way, both cartridge types are pleated for more surfacre area, greater through-put and reduced filtration costs.

Flow-Max pleated cartridges cost less to use, regardless what they cost to buy!

Flow-Max jumbo cartridge

Mounting tabs
For 4 & 5 round models if floor mounting is required.

Flange fittings with legs
Standard on 12 and 22 round models.

Cartridges adapters
Available by special order for 222 and 226 cartridges.

Electro-polishing
For high purity water and increased resistance to corrosion.

Spare parts and options for multi-cartridge filters

Description	Part Number	Description	Part Number
Gasket, Buna-N, 4 & 5	FM8017-B	Hold down plate, 4 round	FM8110-4
Gasket, Buna-N, 12	FM12021-B	Hold down plate, 5 round	FM8110-5
Gasket, Buna-N, 22	FM16021-B	Hold down plate, 12 round	FM12008
Gasket, Viton, 4 & 5	FM8017-V	Hold down plate, 22 round	FM16008
Gasket, Viton, 12	FM12021-V	Center post, one high	FM3014-12
Gasket, Viton, 22	FM16021-V	Center post, two high	FM3014-22
V-post, one high	FM8050-S	Center post, three high	FM3014-32
V-post, two high	FM8051-S	Center post, four high	FM3014-42
V-post, three high	FM8052-S	Vent plug, 1/4”	FM2013
V-post, four high	FM8053-S	Drain plug, 1/2”	FM8011
Knob, 4 round	FM8019	Drain plug, 3/4”	FMDP34
Knob, 5, 12, 22	FM8020	Electro-polishing, 4 & 5	FMEP-4/5
T-bolt, 4 & 5 round	FM8006	Electro-polishing, 12	FMEP-12
T-handle, 4 & 5 round	FM8007	Electro-polishing, 22	FMEP-22
Cover clamp, 12 round v-band	FM12011	Flange fittings,1-1/2”	FMFF-1.5
Cover clamp, 22 round v-band	FM16011	Flange fittings, 2”	FMFF-2
Mounting tabs (4 & 5 round)	FMTABS	222 adapters (one / column)	FMA-222
FMA-222-316 Spring assembly	FMSA	226 adapters (one / column)	FMA-226

Spare parts and options for jumbo cartridge filters

Description	Part Numbers	Description	Part Number
Gasket, Buna-N, single cartridge	FM10017-B	Drain plug, 1/2”	FM8011
Gasket, Viton, single cartridge	FM10017-V	Vent plug, 1/4”	FM2013
Cover clamp, single cartridge	FM10008	Head cover	FM10001
Compression cap	FMCC	Center post, 40	FMCP40
Knob for compression cap, 1/2”	FM8020	Center post, 90	FMCP90
Pressure gauges	PGO15L25	Center post, 170	FMCP170

© 2006 Watts Water Quality & Conditioning Products

WATTS®
WATER QUALITY & CONDITIONING PRODUCTS

Distributed by:

Fermilab

PURCHASE REQUISITION

Print... Exit Preview

Requisition

Requisition Number (Filled in by System)	Oracle Preparer (Filled in by System)	Date	Request Originator:	Extension:	8767
		6/17/2010	Dave Pushka	MS:	219
Division/Section Approval		Date	NEPA Approval		
Business Office Appr		Date			
Directorate Approval		Date			

Requisition Header

Description (of entire requisition)
TEC Manifold Parts

Note to Approver

Justification (To Approver)

Requisition Entry Defaults

Requestor	Deliver-To-Location	Buyers Note (Use attachments I.E. Previous PO)	
Dave Pushka	lab F		
Suggested Vendor Columbia Pipe Supply	Suggested Vendor Site	Suggested Vendor Contact	Suggested Vendor Telephone #
Reference # 0 / Need-By-Date	Project/Task/Expenditure Type and Expenditure Organization	Building Maintenance: Yes ☐ or No ☐ FIMS#	
Note To Receiver		Total of Requisition $2,155.00	

Requisition Lines

Line #	Line Type	PO Line Category	Description (Start with a Noun) (240 Characters Maximum, Enter Additional Descripton in Cell Below Line Item)	Quantity, Unit of Measure and Price		Project Information		Split Coding Qty's
1	GR	Mechanical	Pipe, 3/4" schedule 40, PVC ASTM D-1785, class 1120 in 10'-0 lengths UN Number Hazard Class	Quantity	450	Project		
				Unit of Measure	ft	Task		
				Price Per Unit	$1.60	Exp. Type		
				Extended Price	$720.00	Exp. Org.		
2	GR	Mechanical	Tee, 3/4" by 3/4" by 1/2" (run by run by branch), PVC ASTM D-1784 schedule 40 socket weld ends UN Number Hazard Class	Quantity	950	Project		
				Unit Of Measure	ea	Task		
				Price Per Unit	$0.60	Exp. Type		
				Extended Price	$570.00	Exp. Org.		
3	GR	Mechanical	Reducing insert, 3/4" socket weld by 1/4" FNPT PVC ASTM D-1785 schedule 40. UN Number Hazard Class	Quantity	950	Project		
				Unit of Measure	ea	Task		
				Price Per Unit	$0.70	Exp. Type		
				Extended Price	$665.00	Exp. Org.		

Line #	Line Type	PO Line Category	Description (Start with a Noun) (240 Characters Maximum, Enter Additional Descripton in Cell Below Line Item)	Quantity, Unit of Measure and Price		Project Information		Split Coding Qty's
4	GR	Mechanical	Cement, Medium Duty for PVC, Meets ASTM D2564. 1 quart bruch top can	Quantity	8	Project		
				Units of Measure	quart	Task		
				Price Per Unit	$12.00	Exp. Type		
			UN Number Hazard Class	Extended Price	$96.00	Exp. Org.		
5	GR	Mechanical	Primer, for PVC, Meets ASTM D656. 1 quart bruch top can	Quantity	8	Project		
				Unitof Measure	quart	Task		
				Price Per Unit	$13.00	Exp. Type		
			UN Number Hazard Class	Extended Price	$104.00	Exp. Org.		
6	GR	Mechanical		Quantity	0	Project		
				Unit of Measure		Task		
				Price Per Unit	$0.00	Exp. Type		
			UN Number Hazard Class	Extended Price	$0.00	Exp. Org.		

ITEMS TO BE COMPLETED BY THE REQUESTER:

NOTE: Bolded item **must** be filled-in before requisition can be processed.

1. APPROVALS	Area for your Division/Section, Business Office, NEPA and Directorate approvals
2. REQUEST ORIGINATOR	Name, extension and mail station of person completing the requisition
3. DESCRIPTION ON ENTIRE REQUISITION	Short description (240 characters) identifying what is being purchased.
4. NOTE TO APPROVER	Short note (240 characters) to approver
5. JUSTIFICATION	Short note (240 characters) to justify purchase of item
6. REQUESTER	**Name of person expecting delivery of item**
7. DELIVER TO LOCATION	**Location where Fermilab's Receiving Dept. is to deliver the item once it comes in. Mail Station is not a valid location.**
8. NOTE TO BUYER	Short note (240 characters) to buyer indicationg previous P.O. number etc., must be placed in attachments
9. SUGGESTED VENDOR/SITE/CONTACT/TELEPHONE	Your recommendation for selecting a vendor, including name, address, contact, telephone number
10. REFERENCE #	Your internal means of identifying a requisition
11. NEED-BY-DATE	**Desire date of delivery**
12. PROJECT/TASK/EXP. TYPE AND EXP. ORG	**Project/Task and Exp. Type where entire requisition is charged and Exp. Org.- organization spending the money**
13. BUILDING MAINTENANCE	**Check Yes or No, if yes is Checked FIMS number is required**
14. NOTE TO RECEIVER	Short note (240 characters) to Fermilab's Receiving Dept.
15. TOTAL OF REQUISITION	Total amount of all items listed on requisition
16. LINE TYPE	**Valid type used to determine whether item is for goods or services; example: GR (goods receipt), SN (service non-receipt)**
17. PO LINE CATEGORY	**Valid category for item being requested; example - clothing, furniture, medical, computers/pc's, etc.**
18. DESCRIPTION OF LINE	**A description for each item (240 characters)**
19. QUANTITY	**The number of units requested per item.**
20. UNIT OF MEASURE	**Unit of measure for each item requested**
21. PRICE PER UNIT	**The dollar amount you have authorized the Procurement Department to spend for an item**
22. EXTENDED PRICE	Extended price for each item requested
23. PROJECT/TASK/EXP. TYPE AND EXP. ORG	**Project/Task and Exp. Type where the line items are charged and Exp. Org. - organization spending the money, if different from above**
24. SPLIT CODING QUANTITIES	**Quantities applied to each Project/Task/Expenditure Type and Expenditure Organization**

Fermilab

PURCHASE REQUISITION

Requisition

Requisition Number (Filled in by System)	Oracle Preparer (Filled in by System)	Date	Request Originator:	Extension:	0
		6/25/2010	Dave Pushka	MS:	0
Division/Section Approval		Date	NEPA Approval		
Business Office Appr		Date			
Directorate Approval		Date			

Requisition Header

Description (of entire requisition)
Flow Meters for NOvA TEC Cooling System

Note to Approver

Justification (To Approver)

Requisition Entry Defaults

Requestor	Deliver-To-Location	Buyers Note (Use attachments I.E. Previous PO)	
Dave Pushka	Lab F		
Suggested Vendor	Suggested Vendor Site	Suggested Vendor Contact	Suggested Vendor Telephone #
Harrington Plastics	471 W Wrightwood Ave, Elmhurst		630-530-2067

Reference #	Need-By-Date	Project/Task/Expenditure Type and Expenditure Organization	Building Maintenance: Yes ☐ or No ☑
0		425 1.6.5.4	FIMS#
Note To Receiver			Total of Requisition $1,803.00

Requisition Lines

Line #	Line Type	PO Line Category	Description (Start with a Noun) (240 Characters Maximum, Enter Additional Descripton in Cell Below Line Item)	Quantity, Unit of Measure and Price		Project Information		Split Coding Qty's
1	grgr	Mechanical	King Instrument□7200 Series, O Order Number 0231 6 to 60 gpm range UN Number Hazard Class	Quantity	1	Project		
				Unit of Measure	ea	Task		
				Price Per Unit	$454.62	Exp. Type		
				Extended Price	$454.62	Exp. Org.		
2	GR	Mechanical	King Instrument□7200 Series, O Order Number 0181 3 to 21 gpm range UN Number Hazard Class	Quantity	4	Project		
				Unit Of Measure	ea	Task		
				Price Per Unit	$149.82	Exp. Type		
				Extended Price	$599.28	Exp. Org.		
3	GR	Mechanical	King Instrument□7200 Series, O Order Number 0151 1 to 5 gpm range UN Number Hazard Class	Quantity	5	Project		
				Unit of Measure	ea	Task		
				Price Per Unit	$149.82	Exp. Type		
				Extended Price	$749.10	Exp. Org.		

Line #	Line Type	PO Line Category	Description (Start with a Noun) (240 Characters Maximum, Enter Additional Descripton in Cell Below Line Item)	Quantity, Unit of Measure and Price		Project Information		Split Coding Qty's
4	GR	Mechanical		Quantity	0	Project		
				Units of Measure		Task		
				Price Per Unit	$0.00	Exp. Type		
			UN Number Hazard Class	Extended Price	$0.00	Exp. Org.		
5	GR	Mechanical		Quantity	0	Project		
				Unitof Measure		Task		
				Price Per Unit	$0.00	Exp. Type		
			UN Number Hazard Class	Extended Price	$0.00	Exp. Org.		
6				Quantity	0	Project		
				Unit of Measure		Task		
				Price Per Unit	$0.00	Exp. Type		
			UN Number Hazard Class	Extended Price	$0.00	Exp. Org.		

ITEMS TO BE COMPLETED BY THE REQUESTER:

NOTE: Bolded item **must** be filled-in before requisition can be processed.

1. APPROVALS	Area for your Division/Section, Business Office, NEPA and Directorate approvals
2. REQUEST ORIGINATOR	Name, extension and mail station of person completing the requisition
3. DESCRIPTION ON ENTIRE REQUISITION	Short description (240 characters) identifying what is being purchased.
4. NOTE TO APPROVER	Short note (240 characters) to approver
5. JUSTIFICATION	Short note (240 characters) to justify purchase of item
6. REQUESTER	**Name of person expecting delivery of item**
7. DELIVER TO LOCATION	**Location where Fermilab's Receiving Dept. is to deliver the item once it comes in. Mail Station is not a valid location.**
8. NOTE TO BUYER	Short note (240 characters) to buyer indicationg previous P.O. number etc., must be placed in attachments
9. SUGGESTED VENDOR/SITE/CONTACT/TELEPHONE	Your recommendation for selecting a vendor, including name, address, contact, telephone number
10. REFERENCE #	Your internal means of identifying a requisition
11. NEED-BY-DATE	**Desire date of delivery**
12. PROJECT/TASK/EXP. TYPE AND EXP. ORG	**Project/Task and Exp. Type where entire requisition is charged and Exp. Org.- organization spending the money**
13. BUILDING MAINTENANCE	**Check Yes or No, if yes is Checked FIMS number is required**
14. NOTE TO RECEIVER	Short note (240 characters) to Fermilab's Receiving Dept.
15. TOTAL OF REQUISITION	Total amount of all items listed on requisition
16. LINE TYPE	**Valid type used to determine whether item is for goods or services; example: GR (goods receipt), SN (service non-receipt)**
17. PO LINE CATEGORY	**Valid category for item being requested; example - clothing, furniture, medical, computers/pc's, etc.**
18. DESCRIPTION OF LINE	**A description for each item (240 characters)**
19. QUANTIT	**The number of units requested per item.**
20. UNIT OF MEASURE	**Unit of measure for each item requested**
21. PRICE PER UNIT	**The dollar amount you have authorized the Procurement Department to spend for an item**
22. EXTENDED PRICE	Extended price for each item requested
23. PROJECT/TASK/EXP. TYPE AND EXP. ORG	**Project/Task and Exp. Type where the line items are charged and Exp. Org. - organization spending the money, if different from above**
24. SPLIT CODING QUANTITIES	**Quantities applied to each Project/Task/Expenditure Type and Expenditure Organization**

Fermilab

PURCHASE REQUISITION

Print... Exit Preview

Requisition

Requisition Number (Filled in by System)	Oracle Preparer (Filled in by System)	Date	Request Originator:	Extension:	8767
		6/17/2010	Dave Pushka	MS:	219
Division/Section Approval		Date	NEPA Approval		
Business Office Appr		Date			
Directorate Approval		Date			

Requisition Header

Description (of entire requisition)

Filter and housing for APD cooling at IPND

Note to Approver

Justification (To Approver)

Requisition Entry Defaults

Requestor	Deliver-To-Location	Buyers Note (Use attachments I.E. Previous PO)	
Dave Pushka	Lab F		
Suggested Vendor	Suggested Vendor Site	Suggested Vendor Contact	Suggested Vendor Telephone #
Quantrol Inc / QuanAir		Dan Cmiel	866-782-6876

Reference #	Need-By-Date	Project/Task/Expenditure Type and Expenditure Organization	Building Maintenance: Yes ☐ or No ☑
0	6/30/2010	425 1.5.10	FIMS#
Note To Receiver			Total of Requisition $2,113.00

Requisition Lines

Line #	Line Type	PO Line Category	Description (Start with a Noun) (240 Characters Maximum, Enter Additional Descripton in Cell Below Line Item)	Quantity, Unit of Measure and Price		Project Information		Split Coding Qty's
1	GR	Mechanical	Filter Housing, Watts part number FMJCH90, for use with below filter element	Quantity	1	Project		
				Unit of Measure	ea	Task		
				Price Per Unit	$1,775.00	Exp. Type		
			UN Number Hazard Class	Extended Price	$1,775.00	Exp. Org.		
2	GR	Mechanical	Filter Element, Watts part number FMPIC-90-5-HT for use with above filter housing	Quantity	2	Project		
				Unit Of Measure	ea	Task		
				Price Per Unit	$169.00	Exp. Type		
			UN Number Hazard Class	Extended Price	$338.00	Exp. Org.		
3				Quantity	0	Project		
				Unit of Measure		Task		
				Price Per Unit	$0.00	Exp. Type		
			UN Number Hazard Class	Extended Price	$0.00	Exp. Org.		

Line #	Line Type	PO Line Category	Description (Start with a Noun) (240 Characters Maximum, Enter Additional Descripton in Cell Below Line Item)	Quantity, Unit of Measure and Price		Project Information		Split Coding Qty's
4				Quantity	0	Project		
				Units of Measure		Task		
				Price Per Unit	$0.00	Exp. Type		
			UN Number Hazard Class	Extended Price	$0.00	Exp. Org.		
5				Quantity	0	Project		
				Unitof Measure		Task		
				Price Per Unit	$0.00	Exp. Type		
			UN Number Hazard Class	Extended Price	$0.00	Exp. Org.		
6				Quantity	0	Project		
				Unit of Measure		Task		
				Price Per Unit	$0.00	Exp. Type		
			UN Number Hazard Class	Extended Price	$0.00	Exp. Org.		

ITEMS TO BE COMPLETED BY THE REQUESTER:

NOTE: Bolded item **must** be filled-in before requisition can be processed.

1. APPROVALS	Area for your Division/Section, Business Office, NEPA and Directorate approvals
2. REQUEST ORIGINATOR	Name, extension and mail station of person completing the requisition
3. DESCRIPTION ON ENTIRE REQUISITION	Short description (240 characters) identifying what is being purchased.
4. NOTE TO APPROVER	Short note (240 characters) to approver
5. JUSTIFICATION	Short note (240 characters) to justify purchase of item
6. REQUESTER	**Name of person expecting delivery of item**
7. DELIVER TO LOCATION	**Location where Fermilab's Receiving Dept. is to deliver the item once it comes in. Mail Station is not a valid location.**
8. NOTE TO BUYER	Short note (240 characters) to buyer indicationg previous P.O. number etc., must be placed in attachments
9. SUGGESTED VENDOR/SITE/CONTACT/TELEPHONE	Your recommendation for selecting a vendor, including name, address, contact, telephone number
10. REFERENCE #	Your internal means of identifying a requisition
11. NEED-BY-DATE	**Desire date of delivery**
12. PROJECT/TASK/EXP. TYPE AND EXP. ORG	**Project/Task and Exp. Type where entire requisition is charged and Exp. Org.- organization spending the money**
13. BUILDING MAINTENANCE	**Check Yes or No, if yes is Checked FIMS number is required**
14. NOTE TO RECEIVER	Short note (240 characters) to Fermilab's Receiving Dept.
15. TOTAL OF REQUISITION	Total amount of all items listed on requisition
16. LINE TYPE	**Valid type used to determine whether item is for goods or services; example: GR (goods receipt), SN (service non-receipt)**
17. PO LINE CATEGORY	**Valid category for item being requested; example - clothing, furniture, medical, computers/pc's, etc.**
18. DESCRIPTION OF LINE	**A description for each item (240 characters)**
19. QUANTITY	**The number of units requested per item.**
20. UNIT OF MEASURE	**Unit of measure for each item requested**
21. PRICE PER UNIT	**The dollar amount you have authorized the Procurement Department to spend for an item**
22. EXTENDED PRICE	Extended price for each item requested
23. PROJECT/TASK/EXP. TYPE AND EXP. ORG	**Project/Task and Exp. Type where the line items are charged and Exp. Org. - organization spending the money, if different from above**
24. SPLIT CODING QUANTITIES	**Quantities applied to each Project/Task/Expenditure Type and Expenditure Organization**

Fermilab

PURCHASE REQUISITION

Requisition

Requisition Number (Filled in by System)	Oracle Preparer (Filled in by System)	Date	Request Originator:	Extension:	8767
		6/28/2010	Dave Pushka	MS:	219
Division/Section Approval		Date	NEPA Approval		
Business Office Appr		Date			
Directorate Approval		Date			

Requisition Header

Description (of entire requisition)

Pressure and Temperature Gauges for IPND cooling

Note to Approver

Justification (To Approver)

Requisition Entry Defaults

Requestor	Deliver-To-Location	Buyers Note (Use attachments I.E. Previous PO)	
Dave Pushka	Lab F		
Suggested Vendor	Suggested Vendor Site	Suggested Vendor Contact	Suggested Vendor Telephone #
Affiliated Steam		Jackie Lewellen	708-824-3302

Reference #	Need-By-Date	Project/Task/Expenditure Type and Expenditure Organization	Building Maintenance: Yes ☐ or No ☑
0		425 1.6.5.4	FIMS#
Note To Receiver			Total of Requisition $584.00

Requisition Lines

Line #	Line Type	PO Line Category	Description (Start with a Noun) (240 Characters Maximum, Enter Additional Descripton in Cell Below Line Item)	Quantity, Unit of Measure and Price		Project Information		Split Coding Qty's
1	GR	Mechanical	Thermometer, Ashcroft Part # 50EL60E040 -20/120 as quoted on proposal JAL-1404	Quantity	3	Project		
				Unit of Measure	ea	Task		
				Price Per Unit	$123.00	Exp. Type		
			UN Number Hazard Class	Extended Price	$369.00	Exp. Org.		
2	GR	Mechanical	Gauge, Pressure, Ashcroft Part # 25-1009AWL02L 0 - 60 psi as quoted on proposal JAL-1404	Quantity	5	Project		
				Unit Of Measure	ea	Task		
				Price Per Unit	$43.00	Exp. Type		
			UN Number Hazard Class	Extended Price	$215.00	Exp. Org.		
3				Quantity	0	Project		
				Unit of Measure		Task		
				Price Per Unit	$0.00	Exp. Type		
			UN Number Hazard Class	Extended Price	$0.00	Exp. Org.		

Line #	Line Type	PO Line Category	Description (Start with a Noun) (240 Characters Maximum, Enter Additional Descripton in Cell Below Line Item)	Quantity, Unit of Measure and Price		Project Information		Split Coding Qty's
4				Quantity	0	Project		
				Units of Measure		Task		
				Price Per Unit	$0.00	Exp. Type		
			UN Number Hazard Class	Extended Price	$0.00	Exp. Org.		
5				Quantity	0	Project		
				Unitof Measure		Task		
				Price Per Unit	$0.00	Exp. Type		
			UN Number Hazard Class	Extended Price	$0.00	Exp. Org.		
6				Quantity	0	Project		
				Unit of Measure		Task		
				Price Per Unit	$0.00	Exp. Type		
			UN Number Hazard Class	Extended Price	$0.00	Exp. Org.		

ITEMS TO BE COMPLETED BY THE REQUESTER:

NOTE: Bolded item **must** be filled-in before requisition can be processed.

1. APPROVALS	Area for your Division/Section, Business Office, NEPA and Directorate approvals
2. REQUEST ORIGINATOR	Name, extension and mail station of person completing the requisition
3. DESCRIPTION ON ENTIRE REQUISITION	Short description (240 characters) identifying what is being purchased.
4. NOTE TO APPROVER	Short note (240 characters) to approver
5. JUSTIFICATION	Short note (240 characters) to justify purchase of item
6. REQUESTER	**Name of person expecting delivery of item**
7. DELIVER TO LOCATION	**Location where Fermilab's Receiving Dept. is to deliver the item once it comes in. Mail Station is not a valid location.**
8. NOTE TO BUYER	Short note (240 characters) to buyer indicationg previous P.O. number etc., must be placed in attachments
9. SUGGESTED VENDOR/SITE/CONTACT/TELEPHONE	Your recommendation for selecting a vendor, including name, address, contact, telephone number
10. REFERENCE #	Your internal means of identifying a requisition
11. NEED-BY-DATE	**Desire date of delivery**
12. PROJECT/TASK/EXP. TYPE AND EXP. ORG	**Project/Task and Exp. Type where entire requisition is charged and Exp. Org.- organization spending the money**
13. BUILDING MAINTENANCE	**Check Yes or No, if yes is Checked FIMS number is required**
14. NOTE TO RECEIVER	Short note (240 characters) to Fermilab's Receiving Dept.
15. TOTAL OF REQUISITION	Total amount of all items listed on requisition
16. LINE TYPE	**Valid type used to determine whether item is for goods or services; example: GR (goods receipt), SN (service non-receipt)**
17. PO LINE CATEGORY	**Valid category for item being requested; example - clothing, furniture, medical, computers/pc's, etc.**
18. DESCRIPTION OF LINE	**A description for each item (240 characters)**
19. QUANTIT	**The number of units requested per item.**
20. UNIT OF MEASURE	**Unit of measure for each item requested**
21. PRICE PER UNIT	**The dollar amount you have authorized the Procurement Department to spend for an item**
22. EXTENDED PRICE	Extended price for each item requested
23. PROJECT/TASK/EXP. TYPE AND EXP. ORG	**Project/Task and Exp. Type where the line items are charged and Exp. Org. - organization spending the money, if different from above**
24. SPLIT CODING QUANTITIES	**Quantities applied to each Project/Task/Expenditure Type and Expenditure Organization**

Fermilab

PURCHASE REQUISITION

Requisition

Requisition Number (Filled in by System)	Oracle Preparer (Filled in by System)	Date	Request Originator:	Extension:	0
		6/17/2010	Dave Pushka	MS:	0
Division/Section Approval		Date	NEPA Approval		
Business Office Appr		Date			
Directorate Approval		Date			

Requisition Header

Description (of entire requisition)
TEC Manifold Parts

Note to Approver

Justification (To Approver)

Requisition Entry Defaults

Requestor	Deliver-To-Location	Buyers Note (Use attachments I.E. Previous PO)	
Dave Pushka	lab F		
Suggested Vendor	Suggested Vendor Site	Suggested Vendor Contact	Suggested Vendor Telephone #
Columbia Pipe Supply			

Reference #	Need-By-Date	Project/Task/Expenditure Type and Expenditure Organization	Building Maintenance: Yes ☐ or No ☑
0	7/21/2010	425 1.6.4.5	FIMS#
Note To Receiver			Total of Requisition $636.50

Requisition Lines

Line #	Line Type	PO Line Category	Description (Start with a Noun) (240 Characters Maximum, Enter Additional Descripton in Cell Below Line Item)	Quantity, Unit of Measure and Price		Project Information		Split Coding Qty's
1	GR	Mechanical	Reducing insert, 1/2" socket weld by 1/4" FNPT PVC ASTM D-1785 schedule 40.	Quantity	950	Project		
				Unit of Measure	ea	Task		
				Price Per Unit	$0.67	Exp. Type		
			UN Number Hazard Class	Extended Price	$636.50	Exp. Org.		
2				Quantity	0	Project		
				Unit Of Measure		Task		
				Price Per Unit	$0.00	Exp. Type		
			UN Number Hazard Class	Extended Price	$0.00	Exp. Org.		
3				Quantity	0	Project		
				Unit of Measure		Task		
				Price Per Unit	$0.00	Exp. Type		
			UN Number Hazard Class	Extended Price	$0.00	Exp. Org.		

Line #	Line Type	PO Line Category	Description (Start with a Noun) (240 Characters Maximum, Enter Additional Descripton in Cell Below Line Item)	Quantity, Unit of Measure and Price		Project Information		Split Coding Qty's
4				Quantity	0	Project		
				Units of Measure		Task		
				Price Per Unit	$0.00	Exp. Type		
			UN Number Hazard Class	Extended Price	$0.00	Exp. Org.		
5				Quantity	0	Project		
				Unitof Measure		Task		
				Price Per Unit	$0.00	Exp. Type		
			UN Number Hazard Class	Extended Price	$0.00	Exp. Org.		
6				Quantity	0	Project		
				Unit of Measure		Task		
				Price Per Unit	$0.00	Exp. Type		
			UN Number Hazard Class	Extended Price	$0.00	Exp. Org.		

ITEMS TO BE COMPLETED BY THE REQUESTER:

NOTE: Bolded item **must** be filled-in before requisition can be processed.

1. APPROVALS	Area for your Division/Section, Business Office, NEPA and Directorate approvals
2. REQUEST ORIGINATOR	Name, extension and mail station of person completing the requisition
3. DESCRIPTION ON ENTIRE REQUISITION	Short description (240 characters) identifying what is being purchased.
4. NOTE TO APPROVER	Short note (240 characters) to approver
5. JUSTIFICATION	Short note (240 characters) to justify purchase of item
6. REQUESTER	**Name of person expecting delivery of item**
7. DELIVER TO LOCATION	**Location where Fermilab's Receiving Dept. is to deliver the item once it comes in. Mail Station is not a valid location.**
8. NOTE TO BUYER	Short note (240 characters) to buyer indicationg previous P.O. number etc., must be placed in attachments
9. SUGGESTED VENDOR/SITE/CONTACT/TELEPHONE	Your recommendation for selecting a vendor, including name, address, contact, telephone number
10. REFERENCE #	Your internal means of identifying a requisition
11. NEED-BY-DATE	**Desire date of delivery**
12. PROJECT/TASK/EXP. TYPE AND EXP. ORG	**Project/Task and Exp. Type where entire requisition is charged and Exp. Org.- organization spending the money**
13. BUILDING MAINTENANCE	**Check Yes or No, if yes is Checked FIMS number is required**
14. NOTE TO RECEIVER	Short note (240 characters) to Fermilab's Receiving Dept.
15. TOTAL OF REQUISITION	Total amount of all items listed on requisition
16. LINE TYPE	**Valid type used to determine whether item is for goods or services; example: GR (goods receipt), SN (service non-receipt)**
17. PO LINE CATEGORY	**Valid category for item being requested; example - clothing, furniture, medical, computers/pc's, etc.**
18. DESCRIPTION OF LINE	**A description for each item (240 characters)**
19. QUANTIT	**The number of units requested per item.**
20. UNIT OF MEASURE	**Unit of measure for each item requested**
21. PRICE PER UNIT	**The dollar amount you have authorized the Procurement Department to spend for an item**
22. EXTENDED PRICE	Extended price for each item requested
23. PROJECT/TASK/EXP. TYPE AND EXP. ORG	**Project/Task and Exp. Type where the line items are charged and Exp. Org. - organization spending the money, if different from above**
24. SPLIT CODING QUANTITIES	**Quantities applied to each Project/Task/Expenditure Type and Expenditure Organization**

REV	DESCRIPTION	DRAWN	DATE
		APPROVED	DATE

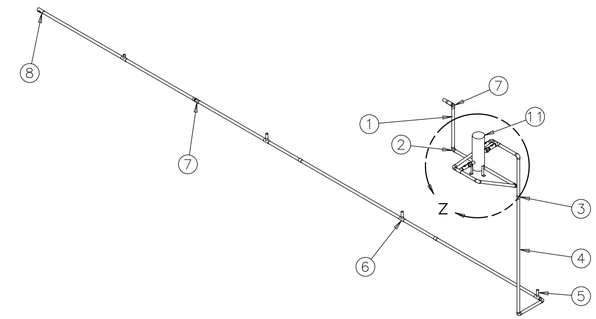

ISO VIEW

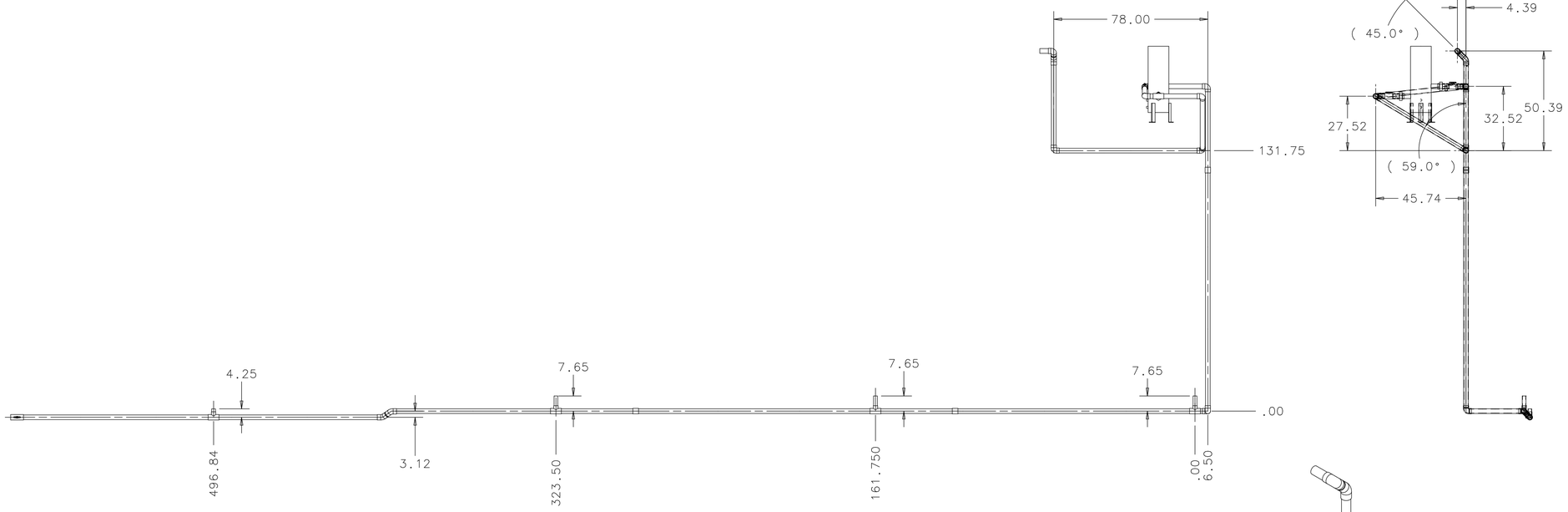

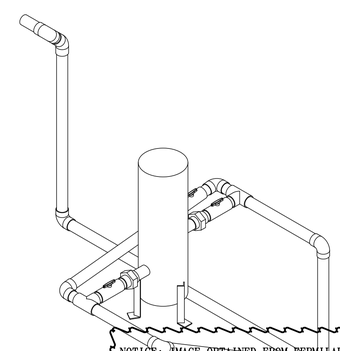

ITEM	PART NO.	DESCRIPTION OR SIZE	QTY.
11	FLOWMAX	FILTER FMJCH90	1
10	COML	TEE SW ENDS ø2.0 SCHD 40 PVC	2
9	COML	UNION ø2.0 NPTF X SW ENDS SCHD 40 PVC	2
8	MCMASTER	BALL VALVE ø2 PVC DOUBLE UNION 4852T56	4
7	COML	ELBOW ø2.0 45° SCHD 40 PVC	3
6	COML	REDUCING TEE SW ENDS ø2 X ø1.5 X ø2 SCHD 40 PVC	4
5	COML	PIPE ø1.5 X LENGTH TO SUIT SCH 40 PVC	4
4	COML	PIPE ø2.0 X 120" LG SCHD 40 PVC	3
3	COML	COUPLING ø2.0 SW ENDS SCHD 40 PVC	3
2	COML	ELBOW ø2.0 90° SCHD 40 PVC	9
1	COML	PIPE ø2.0 X LENGTH TO SUIT SCHD 40 PVC	24

PARTS LIST

UNLESS OTHERWISE SPECIFIED			ORIGINATOR	M.ZUCKERBROT	15-JUL-2010
.XX	.XXX	ANGLES	DRAWN	S.HENTSCHEL	15-JUL-2010
± .12	± ---	± ---	CHECKED	D.FRIEND	28-JUL-2010
			APPROVED	D.PUSHKA	28-JUL-2010

1. BREAK ALL SHARP EDGES MAX.
2. DO NOT SCALE DRAWING.
3. DIMENSIONS BASED UPON ASME Y14.5M 1994
4. MAX. ALL MACH. SURFACES 250
5. DRAWING UNITS: U.S. INCHES

USED ON: ME-486092

MATERIAL: SEE PARTS LIST ABOVE

FERMI NATIONAL ACCELERATOR LABORATORY
UNITED STATES DEPARTMENT OF ENERGY

NOVA-UTILITIES
APD TEC IPND COOLING
NOVA CHILL SYS MAIN RTRN

SCALE	DRAWING NUMBER	SHEET	REV
N/A	3929.500-MD-486109	1 OF 1	

CREATED WITH : Ideas12NXSeries | GROUP: PPD/MECHANICAL DEPARTMENT

NOTICE: IMAGE OBTAINED FROM FERMILAB WEB SITE
This information is provided for REFERENCE use only. Not for MANUFACTURE, or DESIGN INFORMATION. All information contained in this document represents work performed by an agency of the U.S. Government. Neither the U.S. Government nor any agency thereof, nor Universities Research Association, Inc., nor any of their Employees or officers, makes any warranty, express or implied, or assumes any legal liability or responsibility for the accuracy, completeness, or usefulness of any information, apparatus, product or process disclosed, or represents that its use would not infringe privately owned rights.

REV	DESCRIPTION	DRAWN	DATE
		APPROVED	DATE

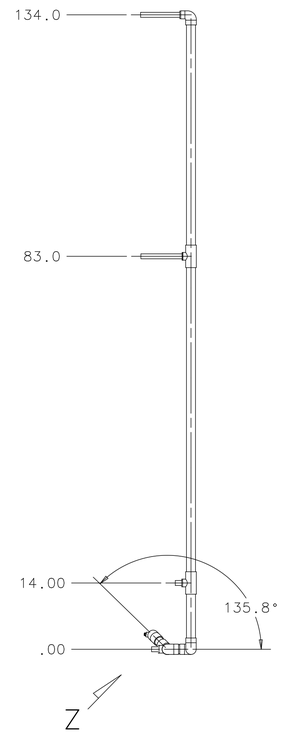

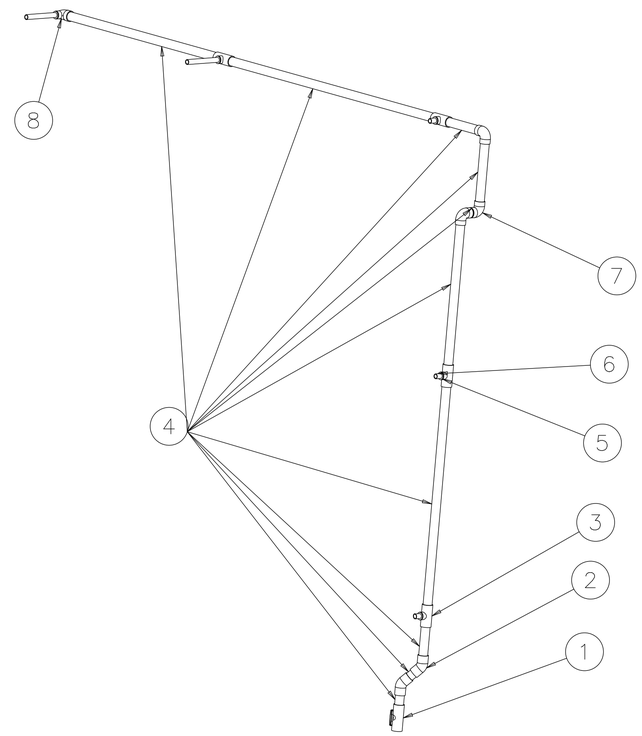

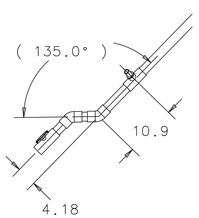

VIEW Z

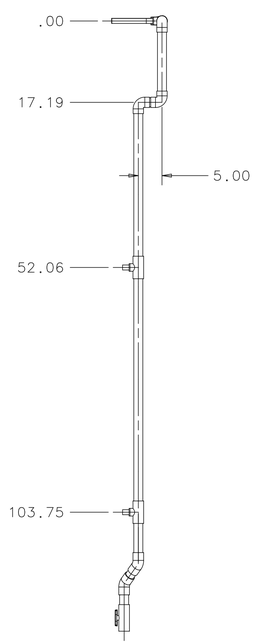

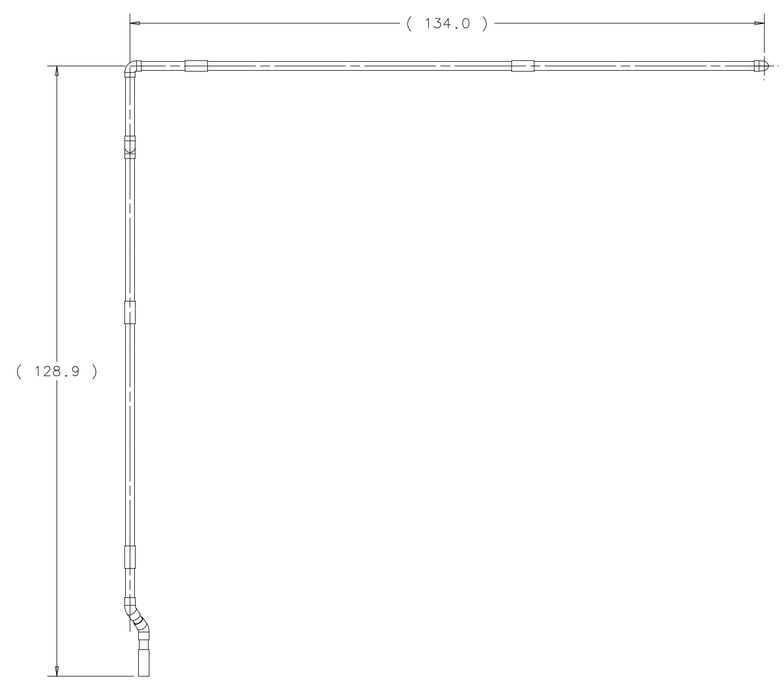

ITEM	PART NO.	DESCRIPTION OR SIZE	QTY.
8	COML	REDUCING 90° ELBOW SCHD 40 PVC SW ENDS ø 1 X ø1.5	1
7	COML	90° ELBOW PVC SCHD 40 SW ENDS 1 1/2 X 1 1/2	3
6	COML	PIPE ø3/4 SCHD 40 PVC LENGTH TO SUIT	5
5	COML	REDUCER SCHD 40 PVC SPIGOT 1 SPIGOT X 3/4 SW END	5
4	COML	PIPE ø1 1/2 SCHED 40 PVC LENGTH TO SUIT	10
3	COML	REDUCING TEE SW ENDS 1 1/2 X 1 X 1 1/2	4
2	COML	ELBOW 45° SW ENDS 1 1/2 X 1 1/2	2
1	MCMASTER	BALL VALVE PVC DOUBLE UNION 4852T55	1

PARTS LIST

UNLESS OTHERWISE SPECIFIED					
.XX	.XXX	ANGLES	ORIGINATOR	M.ZUCKERBROT	14-JUL-2010
± .12	± ---	± ---	DRAWN	S.HENTSCHEL	14-JUL-2010
			CHECKED	D.FRIEND	28-JUL-2010
			APPROVED	D.PUSHKA	28-JUL-2010

1. BREAK ALL SHARP EDGES MAX.
2. DO NOT SCALE DRAWING.
3. DIMENSIONS BASED UPON ASME Y14.5M 1994
4. MAX. ALL MACH. SURFACES 250
5. DRAWING UNITS: U.S. INCHES

USED ON: ME-486093

MATERIAL: SEE PARTS LIST ABOVE

FERMI NATIONAL ACCELERATOR LABORATORY
UNITED STATES DEPARTMENT OF ENERGY

NOVA-UTILITIES
APD TEC IPND COOLING
NOVA MUON BLK CHIL RTN FEED

SCALE	DRAWING NUMBER	SHEET	REV
1:8	3929.500-MD-486107	1 OF 1	

CREATED WITH : Ideas12NXSeries | GROUP: PPD/MECHANICAL DEPARTMENT

NOTICE: IMAGE OBTAINED FROM FERMILAB WEB SITE

This information is provided for REFERENCE use only. Not for MANUFACTURE, or DESIGN INFORMATION. All information contained in this document represents work sponsored by an agency of the U.S. Government. Neither the U.S. Government nor any agency thereof, nor Universities Research Association, Inc., nor any of their employees or officers, makes any warranty, express or implied, or assumes any legal liability or responsibility for the accuracy, completeness, or usefulness of any information, apparatus, product or process disclosed, or represents that its use would not infringe privately owned rights.

REV	DESCRIPTION	DRAWN	DATE
		APPROVED	DATE

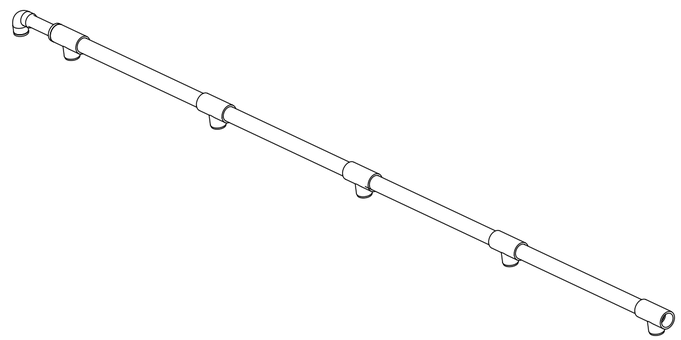

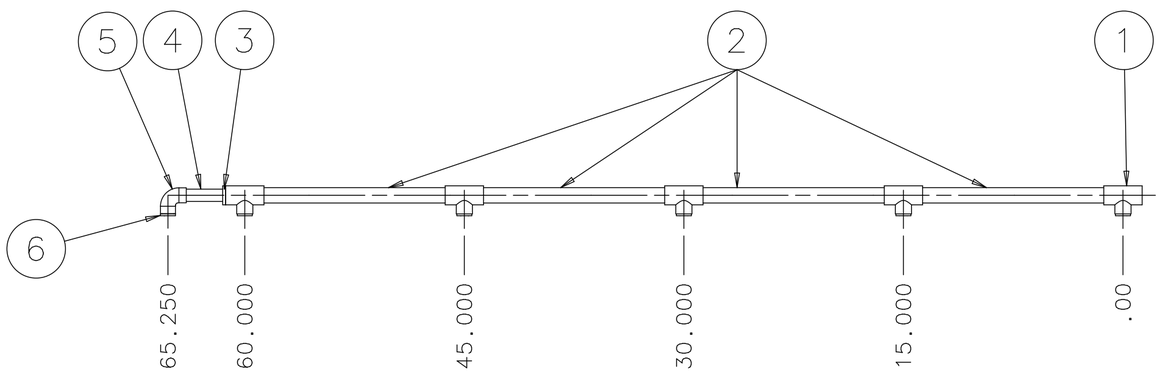

ITEM	PART NO.	DESCRIPTION OR SIZE	QTY.
6	COML	SLIPTHREADED BUSHING, 1/2" SPIGOT X 1/4"FIPS, PVC SCH. 40	6
5	COML	ELBOW, 90° SW ENDS: 1/2" PVC SCH. 40	1
4	COML	PIPE, ø1/2"; LENGTH AS REQUIRED PVC SCH. 40	1
3	COML	SLIP BUSHING SPIGOT x SW END, 3/4" SPIGOT X 1/2"S PVC SCH. 40	1
2	COML	PIPE, ø3/4"; LENGTH AS REQUIRED PVC SCH. 40	4
1	COML	REDUCING TEE SW ENDS; 3/4" X 1/2" X 3/4" PVC SCH. 40	5

PARTS LIST

UNLESS OTHERWISE SPECIFIED					
.XX	.XXX	ANGLES	ORIGINATOR	M.ZUCKERBROT	14-JUL-2010
± .12	± ---	± ---	DRAWN	S.HENTSCHEL	14-JUL-2010
			CHECKED	D.FRIEND	28-JUL-2010
			APPROVED	D.PUSHKA	28-JUL-2010

1. BREAK ALL SHARP EDGES MAX.
2. DO NOT SCALE DRAWING.
3. DIMENSIONS BASED UPON ASME Y14.5M 1994
4. MAX. ALL MACH. SURFACES 250
5. DRAWING UNITS: U.S. INCHES

USED ON: ME-486093

MATERIAL: SEE PARTS LIST ABOVE

FERMI NATIONAL ACCELERATOR LABORATORY
UNITED STATES DEPARTMENT OF ENERGY

NOVA-UTILITIES
COOLING SYSTEMS-MANIFOLDS
CHIL BLK MU VERT RTN MANF

SCALE	DRAWING NUMBER	SHEET	REV
1:8	3929.500-MC-486106	1 OF 1	

CREATED WITH : Ideas12NXSeries | GROUP: PPD/MECHANICAL DEPARTMENT

NOTICE: IMAGE OBTAINED FROM FERMILAB WEB SITE

This information is provided for REFERENCE use only. Not for MANUFACTURE, or DESIGN INFORMATION. All information contained in this document represents work sponsored by an agency of the U.S. Government. Neither the U.S. Government nor any agency thereof, nor Universities Research Association, Inc., nor any of their employees or officers, makes any warranty, express or implied, or assumes any legal liability or responsibility for the accuracy, completeness, or usefulness of any information, apparatus, product or process disclosed, or represents that its use would not infringe privately owned rights.

REV	DESCRIPTION	DRAWN	DATE
		APPROVED	DATE

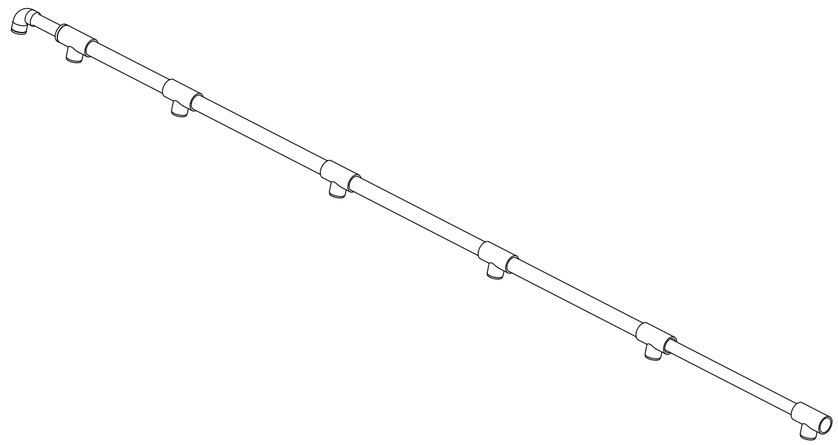

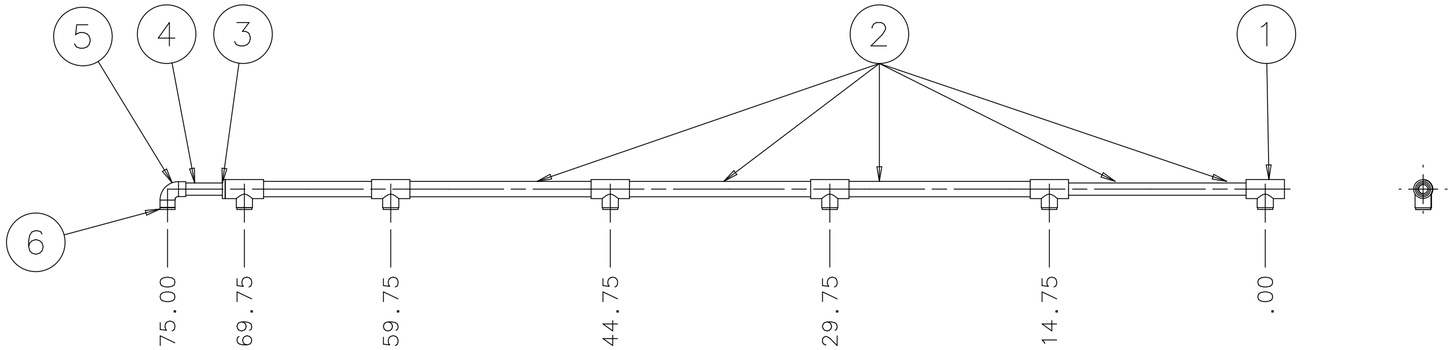

ITEM	PART NO.	DESCRIPTION OR SIZE	QTY.
6	COML	SLIPTHREADED BUSHING, 1/2" SPIGOT X 1/4"FIPS, PVC SCH. 40	7
5	COML	ELBOW, 90°SW ENDS: 1/2" PVC SCH. 40	1
4	COML	PIPE, ø1/2"; LENGTH AS REQUIRED PVC SCH. 40	1
3	COML	SLIP BUSHING SPIGOT x SW END, 3/4" SPIGOT X 1/2"S PVC SCH. 40	1
2	COML	PIPE, ø3/4"; LENGTH AS REQUIRED PVC SCH. 40	5
1	COML	REDUCING TEE SW ENDS; 3/4" X 1/2" X 3/4" PVC SCH. 40	6

PARTS LIST

UNLESS OTHERWISE SPECIFIED					
.xx	.xxx	ANGLES	ORIGINATOR	M.ZUCKERBROT	14-JUL-2010
± .12	± ---	± ---	DRAWN	S.HENTSCHEL	14-JUL-2010
			CHECKED	D.FRIEND	28-JUL-2010
			APPROVED	D.PUSHKA	28-JUL-2010

1. BREAK ALL SHARP EDGES MAX.
2. DO NOT SCALE DRAWING.
3. DIMENSIONS BASED UPON ASME Y14.5M 1994
4. MAX. ALL MACH. SURFACES 250
5. DRAWING UNITS: U.S. INCHES

USED ON: ME-486093

MATERIAL: SEE PARTS LIST ABOVE

FERMI NATIONAL ACCELERATOR LABORATORY
UNITED STATES DEPARTMENT OF ENERGY

NOVA-UTILITIES
COOLING SYSTEMS-MANIFOLDS
NOVA CHL BLK MU HOR RTN TP MANF

SCALE	DRAWING NUMBER	SHEET	REV
1:8 AS NOTED	3929.500-MC-486105	1 OF 1	

CREATED WITH : Ideas12NXSeries | GROUP: PPD/MECHANICAL DEPARTMENT

NOTICE: IMAGE OBTAINED FROM FERMILAB WEB SITE

This information is provided for REFERENCE use only. Not for MANUFACTURE, or DESIGN INFORMATION. All information contained in this document represents work sponsored by an agency of the U.S. Government. Neither the U.S. Government nor any agency thereof, nor Universities Research Association, Inc., nor any of their employees or officers, makes any warranty, express or implied, or assumes any legal liability or responsibility for the accuracy, completeness, or usefulness of any information, apparatus, product or process disclosed, or represents that its use would not infringe privately owned rights.

REV	DESCRIPTION	DRAWN	DATE
		APPROVED	DATE

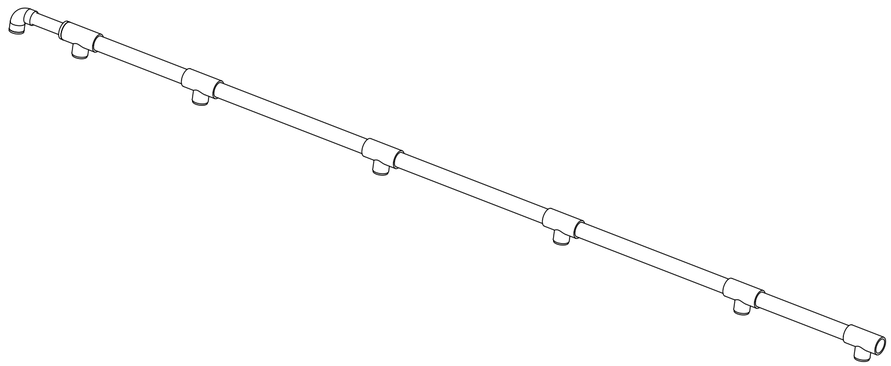

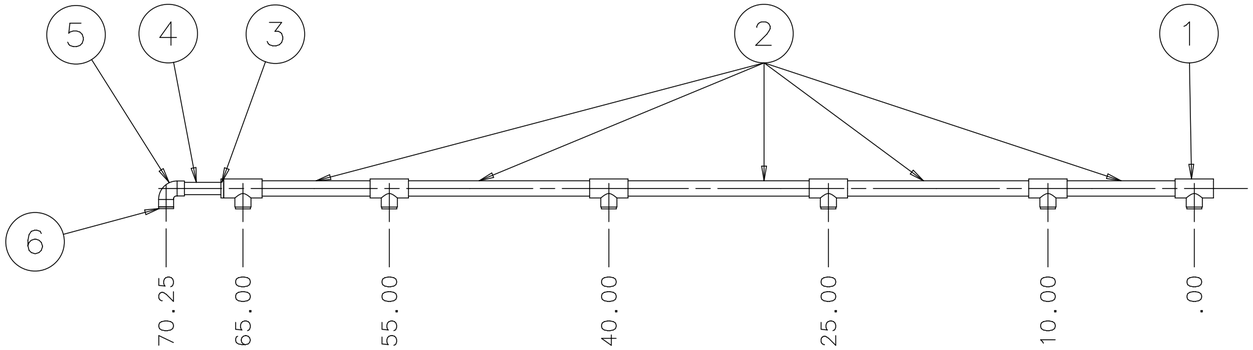

ITEM	PART NO.	DESCRIPTION OR SIZE	QTY.
6	COML	SLIPTHREADED BUSHING, 1/2" SPIGOT X 1/4"FIPS, PVC SCH. 40	7
5	COML	ELBOW, 90°SW ENDS: 1/2" PVC SCH. 40	1
4	COML	PIPE, ø1/2"; LENGTH AS REQUIRED PVC SCH. 40	1
3	COML	SLIP BUSHING SPIGOT X SW END, 3/4" SPIGOT X 1/2"SW PVC SCH. 40	1
2	COML	PIPE, ø3/4"; LENGTH AS REQUIRED PVC SCH. 40	5
1	COML	REDUCING TEE SW ENDS; 3/4" X 1/2" X 3/4" PVC SCH. 40	6

PARTS LIST

UNLESS OTHERWISE SPECIFIED			ORIGINATOR	M.ZUCKERBROT	14-JUL-2010
.XX	.XXX	ANGLES	DRAWN	S.HENTSCHEL	14-JUL-2010
± .12	± ---	± ---	CHECKED	D.FRIEND	28-JUL-2010
			APPROVED	D.PUSHKA	28-JUL-2010

1. BREAK ALL SHARP EDGES MAX.
2. DO NOT SCALE DRAWING.
3. DIMENSIONS BASED UPON ASME Y14.5M 1994
4. MAX. ALL MACH. SURFACES 250
5. DRAWING UNITS: U.S. INCHES

USED ON: 486093

MATERIAL: SEE PARTS LIST ABOVE SCH 40 PVC PIPE

FERMI NATIONAL ACCELERATOR LABORATORY
UNITED STATES DEPARTMENT OF ENERGY

NOVA-UTILITIES
COOLING SYSTEMS-MANIFOLDS
NOVA CHILL BLK MU HOR RTN MANF

SCALE	DRAWING NUMBER	SHEET	REV
1:8 AS NOTED	3929.500-MC-486104	1 OF 1	

CREATED WITH : Ideas12NXSeries | GROUP: PPD/MECHANICAL DEPARTMENT

NOTICE: IMAGE OBTAINED FROM FERMILAB WEB SITE

This information is provided for REFERENCE use only. Not for MANUFACTURE, or DESIGN INFORMATION. All information contained in this document represents work sponsored by an agency of the U.S. Government. Neither the U.S. Government nor any agency thereof, nor Universities Research Association, Inc., nor any of their employees or officers, makes any warranty, express or implied, or assumes any legal liability or responsibility for the accuracy, completeness, or usefulness of any information, apparatus, product or process disclosed, or represents that its use would not infringe privately owned rights.

REV	DESCRIPTION	DRAWN	DATE
		APPROVED	DATE

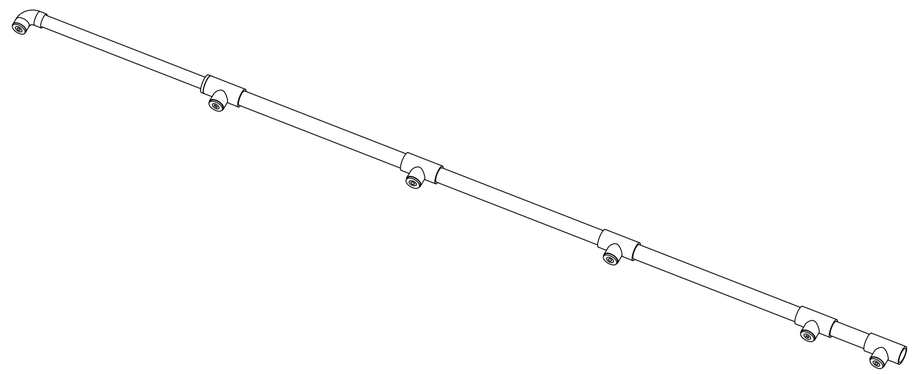

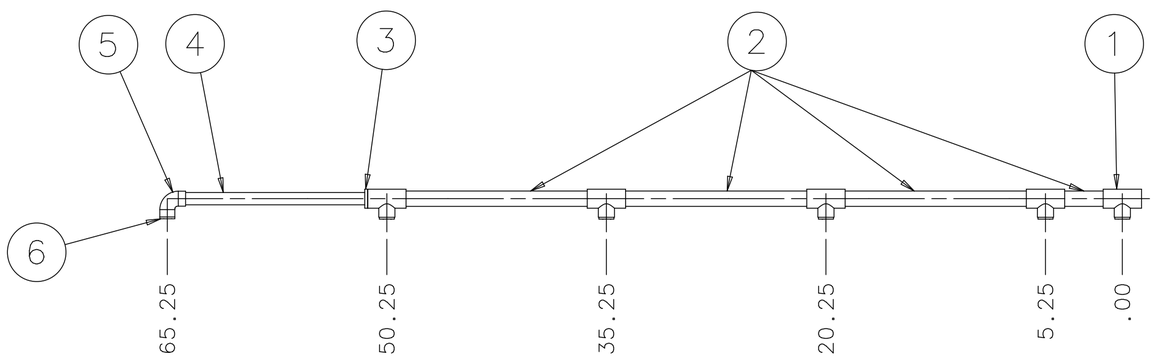

ITEM	PART NO.	DESCRIPTION OR SIZE	QTY.
6	COML	SLIPTHREADED BUSHING, 1/2" SPIGOT X 1/4"FIPS, PVC SCH. 40	6
5	COML	ELBOW, 90°SW ENDS: 1/2" PVC SCH. 40	1
4	COML	PIPE, ø1/2"; LENGTH AS REQUIRED PVC SCH. 40	1
3	COML	SLIP BUSHING SPIGOT x SW 3/4" SPIGOT X 1/2" SW PVC SCH. 40	1
2	COML	PIPE, ø3/4"; LENGTH AS REQUIRED PVC SCH. 40	4
1	COML	REDUCING TEE SW END 3/4" X 1/2" X 3/4" PVC SCH. 40	5

PARTS LIST

UNLESS OTHERWISE SPECIFIED			ORIGINATOR	M.ZUCKERBROT	14-JUL-2010
.XX	.XXX	ANGLES	DRAWN	S.HENTSCHEL	14-JUL-2010
± .12	± ---	± ---	CHECKED	D.FRIEND	28-JUL-2010
			APPROVED	D.PUSHKA	28-JUL-2010

1. BREAK ALL SHARP EDGES MAX.
2. DO NOT SCALE DRAWING.
3. DIMENSIONS BASED UPON
4. MAX. ALL MACH. SURFACES 250
5. DRAWING UNITS: U.S. INCHES

USED ON: 486094

MATERIAL: SEE PARTS LIST ABOVE SCH 40 PVC PIPE

FERMI NATIONAL ACCELERATOR LABORATORY
UNITED STATES DEPARTMENT OF ENERGY

NOVA-UTILITIES
COOLING SYSTEMS-MANIFOLDS
NOVA CHIL BLK MU VRT SPY MANF

SCALE	DRAWING NUMBER	SHEET	REV
1:8 AS NOTED	3929.500-MC-486103	1 OF 1	

CREATED WITH : Ideas12NXSeries | GROUP: PPD/MECHANICAL DEPARTMENT

NOTICE: IMAGE OBTAINED FROM FERMILAB WEB SITE

This information is provided for REFERENCE use only. Not for MANUFACTURE, or DESIGN INFORMATION. All information contained in this document represents work sponsored by an agency of the U.S. Government. Neither the U.S. Government nor any agency thereof, nor Universities Research Association, Inc., nor any of their employees or officers, makes any warranty, express or implied, or assumes any legal liability or responsibility for the accuracy, completeness, or usefulness of any information, apparatus, product or process disclosed, or represents that its use would not infringe privately owned rights.

REV	DESCRIPTION	DRAWN	DATE
		APPROVED	DATE

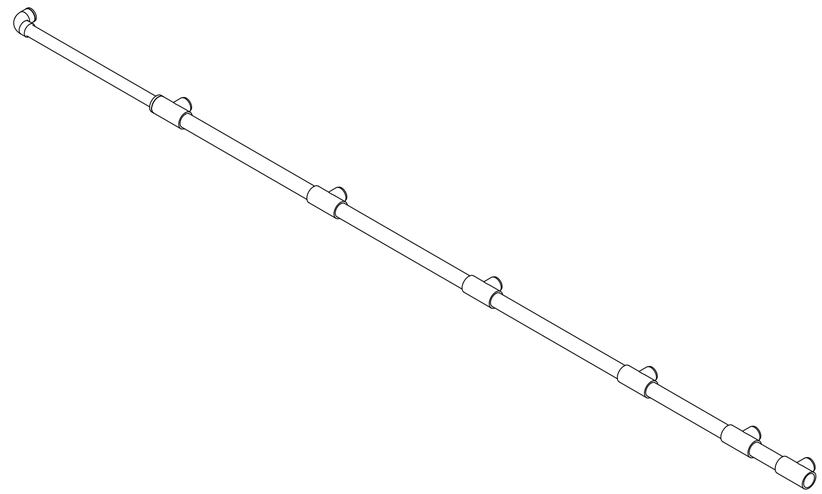

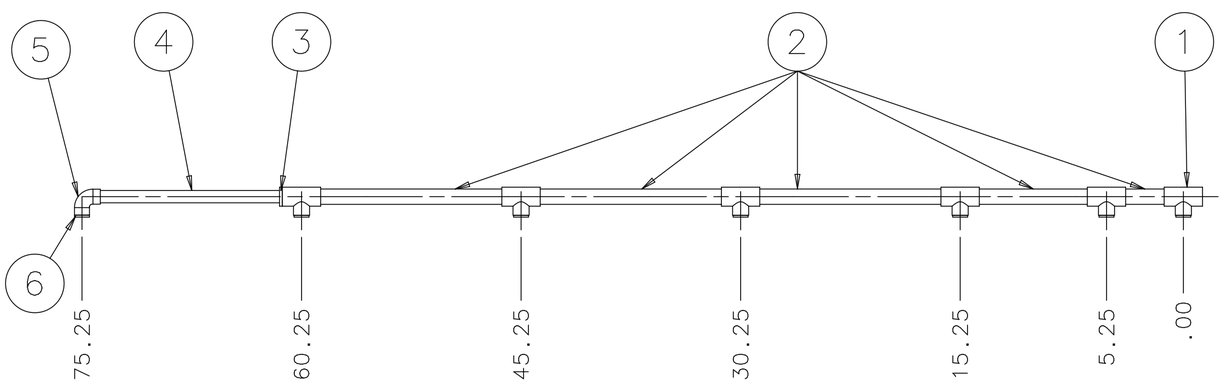

ITEM	PART NO.	DESCRIPTION OR SIZE	QTY.
6	COML	SLIPTHREADED BUSHING, 1/2" SPIGOT X 1/4"FIPS, PVC SCH. 40	7
5	COML	ELBOW, 90°SW ENDS: 1/2" PVC SCH. 40	1
4	COML	PIPE, ø1/2"; LENGTH AS REQUIRED PVC SCH. 40	1
3	COML	SLIP BUSHING SPIGOT x SW, 3/4" SPIGOT X 1/2"S PVC SCH. 40	1
2	COML	PIPE, ø3/4"; LENGTH AS REQUIRED PVC SCH. 40	5
1	COML	REDUCING TEE SW ENDS; 3/4" X 1/2" X 3/4" PVC SCH. 40	6

PARTS LIST

UNLESS OTHERWISE SPECIFIED			ORIGINATOR	M.ZUCKERBROT	14-JUL-2010
.XX	.XXX	ANGLES	DRAWN	S.HENTSCHEL	14-JUL-2010
± .12	± ---	± ---	CHECKED	D.FRIEND	28-JUL-2010
			APPROVED	D.PUSHKA	28-JUL-2010

1. BREAK ALL SHARP EDGES MAX.
2. DO NOT SCALE DRAWING.
3. DIMENSIONS BASED UPON ASME Y14.5M 1994
4. MAX. ALL MACH. SURFACES 250
5. DRAWING UNITS: U.S. INCHES

USED ON: 486094

MATERIAL: SEE PARTS LIST ABOVE SCH 40 PVC PIPE

FERMI NATIONAL ACCELERATOR LABORATORY
UNITED STATES DEPARTMENT OF ENERGY

NOVA-UTILITIES
COOLING SYSTEMS-MANIFOLDS
NOVA CHIL BLK MU HOR SPY MANF TP

SCALE	DRAWING NUMBER	SHEET	REV
1:8 AS NOTED	3929.500-MC-486102	1 OF 1	

CREATED WITH : Ideas12NXSeries | GROUP: PPD/MECHANICAL DEPARTMENT

NOTICE: IMAGE OBTAINED FROM FERMILAB WEB SITE

This information is provided for REFERENCE use only. Not for MANUFACTURE, or DESIGN INFORMATION. All information contained in this document represents work sponsored by an agency of the U.S. Government. Neither the U.S. Government nor any agency thereof, nor Universities Research Association, Inc., nor any of their employees or officers, makes any warranty, express or implied, or assumes any legal liability or responsibility for the accuracy, completeness, or usefulness of any information, apparatus, product or process disclosed, or represents that its use would not infringe privately owned rights.

REV	DESCRIPTION	DRAWN	DATE
		APPROVED	DATE

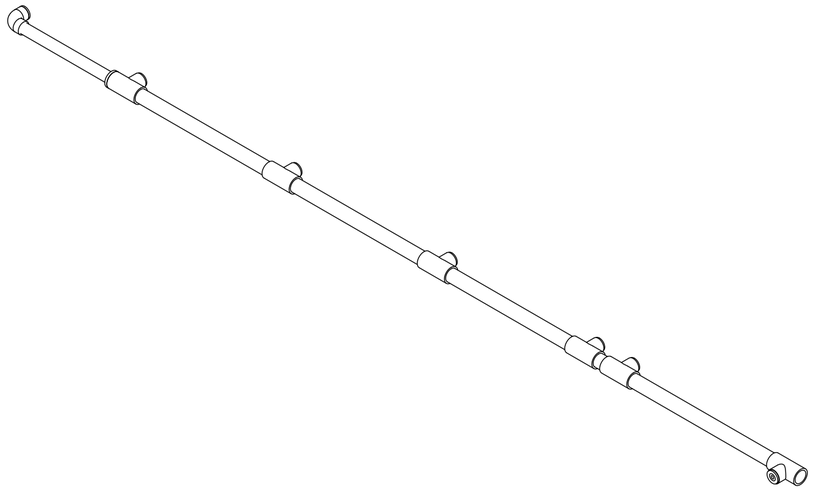

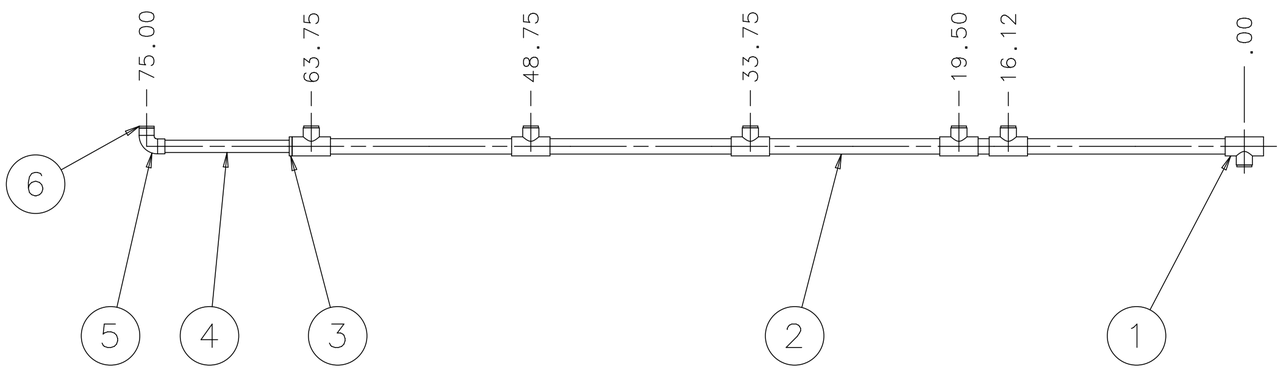

ITEM	PART NO.	DESCRIPTION OR SIZE	QTY.
6	COML	SLIPTHREADED BUSHING, 1/2" SPIGOT X 1/4"FIPS, PVC SCH. 40	7
5	COML	ELBOW, 90° SW ENDS: 1/2" PVC SCH. 40	1
4	COML	PIPE, ø1/2"; LENGTH AS REQUIRED PVC SCH. 40	1
3	COML	SLIP BUSHING SPIGOT x SW, 3/4" SPIGOT X 1/2"S PVC SCH. 40	1
2	COML	PIPE, ø3/4"; LENGTH AS REQUIRED PVC SCH. 40	5
1	COML	REDUCING TEE SW ENDS; 3/4" X 1/2" X 3/4" PVC SCH. 40	6

PARTS LIST

UNLESS OTHERWISE SPECIFIED			ORIGINATOR	M.ZUCKERBROT	13-JUL-2010
.XX	.XXX	ANGLES	DRAWN	S.HENTSCHEL	13-JUL-2010
± .12	± ---	± ---	CHECKED	D.FRIEND	28-JUL-2010
			APPROVED	D.PUSHKA	28-JUL-2010

1. BREAK ALL SHARP EDGES MAX.
2. DO NOT SCALE DRAWING.
3. DIMENSIONS BASED UPON ASME Y14.5M 1994
4. MAX. ALL MACH. SURFACES 250
5. DRAWING UNITS: U.S. INCHES

USED ON: ME-486094

MATERIAL: SEE PARTS LIST ABOVE

FERMI NATIONAL ACCELERATOR LABORATORY
UNITED STATES DEPARTMENT OF ENERGY

NOVA-COOLING_SYSTEMS
COOLING SYSTEMS-MANIFOLDS
NOVA CHIL BLK MU HOR SPY MANF MD

SCALE	DRAWING NUMBER	SHEET	REV
1:8	3929.500-MC-486100	1 OF 1	

CREATED WITH : Ideas12NXSeries | GROUP: PPD/MECHANICAL DEPARTMENT

NOTICE: IMAGE OBTAINED FROM FERMILAB WEB SITE

This information is provided for REFERENCE use only. Not for MANUFACTURE, or DESIGN INFORMATION. All information contained in this document represents work sponsored by an agency of the U.S. Government. Neither the U.S. Government nor any agency thereof, nor Universities Research Association, Inc., nor any of their employees or officers, makes any warranty, express or implied, or assumes any legal liability or responsibility for the accuracy, completeness, or usefulness of any information, apparatus, product or process disclosed, or represents that its use would not infringe privately owned rights.

REV	DESCRIPTION	DRAWN	DATE
		APPROVED	DATE

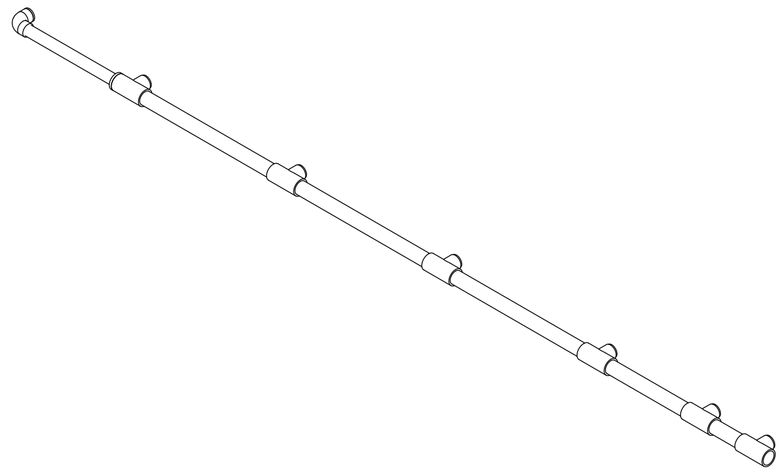

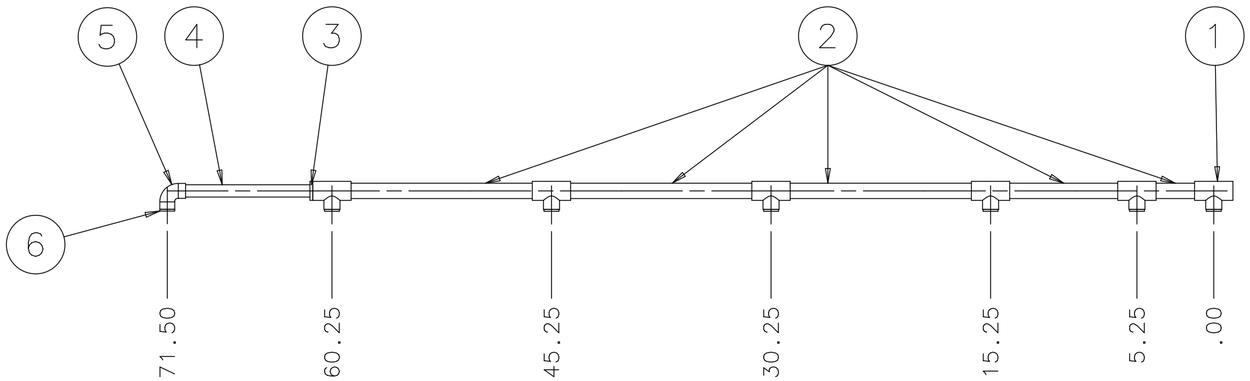

ITEM	PART NO.	DESCRIPTION OR SIZE	QTY.
6	COML	SLIPTHREADED BUSHING, 1/2" SPIGOT X 1/4"FIPS, PVC SCH. 40	7
5	COML	ELBOW, 90°SW ENDS: 1/2" PVC SCH. 40	1
4	COML	PIPE, ø1/2"; LENGTH AS REQUIRED PVC SCH. 40	1
3	COML	SLIP BUSHING SPIGOT x SW END 3/4" SPIGOT X 1/2"S PVC SCH. 40	1
2	COML	PIPE, ø3/4"; LENGTH AS REQUIRED PVC SCH. 40	5
1	COML	REDUCING TEE SW ENDS; 3/4" X 1/2" X 3/4" PVC SCH. 40	6

PARTS LIST

UNLESS OTHERWISE SPECIFIED			ORIGINATOR	M.ZUCKERBROT	13-JUL-2010
.XX	.XXX	ANGLES	DRAWN	S.HENTSCHEL	13-JUL-2010
± .12	± ---	± ---	CHECKED	D.FRIEND	28-JUL-2010
			APPROVED	D.PUSHKA	28-JUL-2010

1. BREAK ALL SHARP EDGES MAX.
2. DO NOT SCALE DRAWING.
3. DIMENSIONS BASED UPON ASME Y14.5M 1994
4. MAX. ALL MACH. SURFACES 250
5. DRAWING UNITS: U.S. INCHES

USED ON: ME-486094

MATERIAL: SEE PARTS LIST ABOVE

FERMI NATIONAL ACCELERATOR LABORATORY
UNITED STATES DEPARTMENT OF ENERGY

NOVA-UTILITIES
COOLING SYSTEMS-MANIFOLDS
NOVA CHIL BLK MU HOR SPY MANF BT

SCALE	DRAWING NUMBER	SHEET	REV
1:8	3929.500-MC-486099	1 OF 1	

CREATED WITH : Ideas12NXSeries | GROUP: PPD/MECHANICAL DEPARTMENT

NOTICE: IMAGE OBTAINED FROM FERMILAB WEB SITE

This information is provided for REFERENCE use only. Not for MANUFACTURE, or DESIGN INFORMATION. All information contained in this document represents work sponsored by an agency of the U.S. Government. Neither the U.S. Government nor any agency thereof, nor Universities Research Association, Inc., nor any of their employees or officers, makes any warranty, express or implied, or assumes any legal liability or responsibility for the accuracy, completeness, or usefulness of any information, apparatus, product or process disclosed, or represents that its use would not infringe privately owned rights.

REV	DESCRIPTION	DRAWN	DATE
		APPROVED	DATE

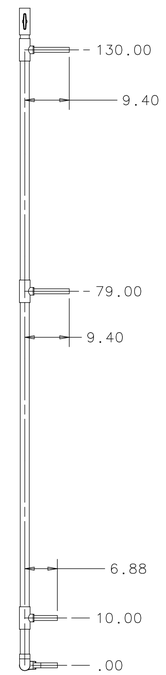

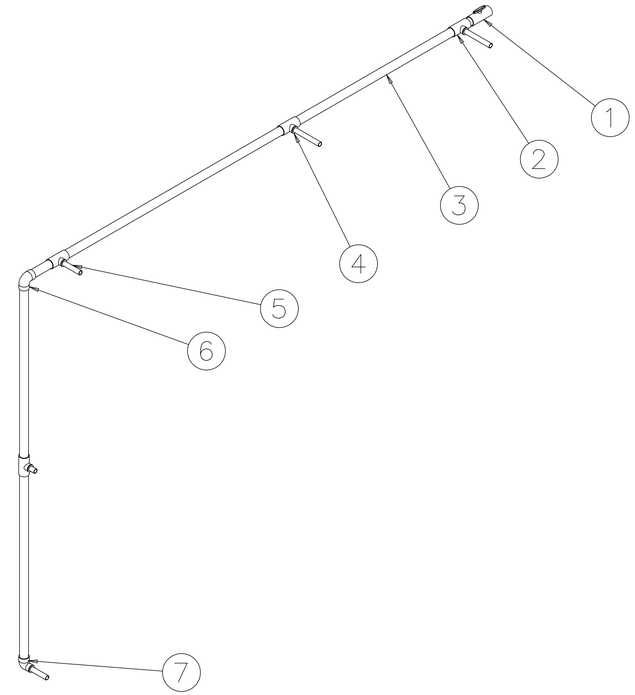

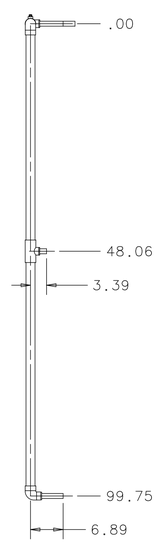

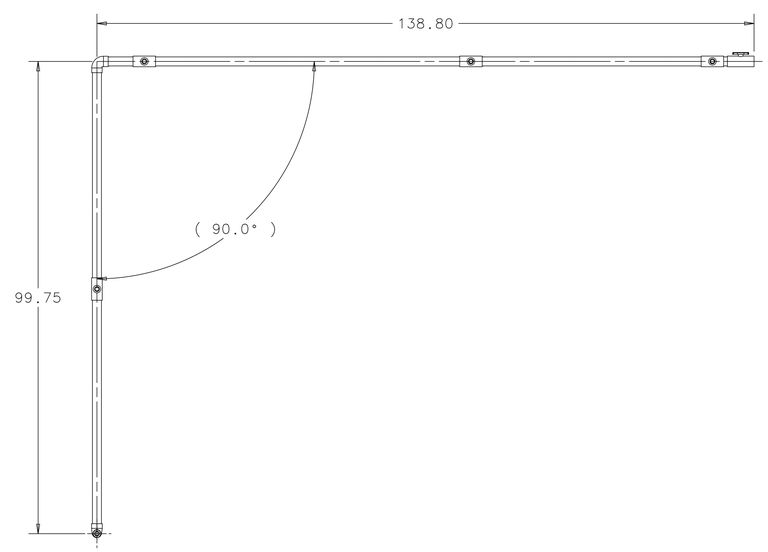

ITEM	PART NO.	DESCRIPTION OR SIZE	QTY.
7	COML	REDUCING ELBOW 90° SCHD 40 PVC SW ENDS ø 1 X ø1.5	1
6	COML	90° ELBOW PVC SCHD 40, SW ENDS 1 1/2	1
5	COML	PIPE SCHD 40 PVC, ø3/4 LENGTH TO SUIT	5
4	COML	REDUCER SCHD 40 PVC SPIGOT X SW 1 SPIGOT X 3/4 SW END	5
3	COML	PIPE SCHED 40 PVC, ø1 1/2 LENGTH TO SUIT	6
2	COML	REDUCING TEE SW ENDS 1 1/2 X 1 X 1 1/2	4
1	MCMASTER	BALL VALVE PVC DOUBLE UNION 4852T55	1

PARTS LIST

UNLESS OTHERWISE SPECIFIED					
.XX	.XXX	ANGLES	ORIGINATOR	M.ZUCKERBROT	06-JUL-2010
± .12	± ---	± ---	DRAWN	S.HENTSCHEL	06-JUL-2010
			CHECKED	D.FRIEND	28-JUL-2010
			APPROVED	D.PUSHKA	28-JUL-2010

1. BREAK ALL SHARP EDGES MAX.
2. DO NOT SCALE DRAWING.
3. DIMENSIONS BASED UPON MSME Y14.5M 1994
4. MAX. ALL MACH. SURFACES 250
5. DRAWING UNITS: U.S. INCHES

USED ON: ME-486094

MATERIAL: SEE PARTS LIST ABOVE SCH 40 PVC PIPE

FERMI NATIONAL ACCELERATOR LABORATORY
UNITED STATES DEPARTMENT OF ENERGY

NOVA-UTILITIES
IPND APD COOLING SYSTEM
NOVA MUON BLK SUPY FEED

SCALE	DRAWING NUMBER	SHEET	REV
N/A	3929.500-MD-486098	1 OF 1	

CREATED WITH : Ideas12NXSeries | GROUP: PPD/MECHANICAL DEPARTMENT

NOTICE: IMAGE OBTAINED FROM FERMILAB WEB SITE

This information is provided for REFERENCE use only. Not for MANUFACTURE, or DESIGN INFORMATION. All information contained in this document represents work sponsored by an agency of the U.S. Government. Neither the U.S. Government nor any agency thereof, nor Universities Research Association, Inc., nor any of their employees or officers, makes any warranty, express or implied, or assumes any legal liability or responsibility for the accuracy, completeness, or usefulness of any information, apparatus, product or process disclosed, or represents that its use would not infringe privately owned rights.

REV	DESCRIPTION	DRAWN	DATE
		APPROVED	DATE

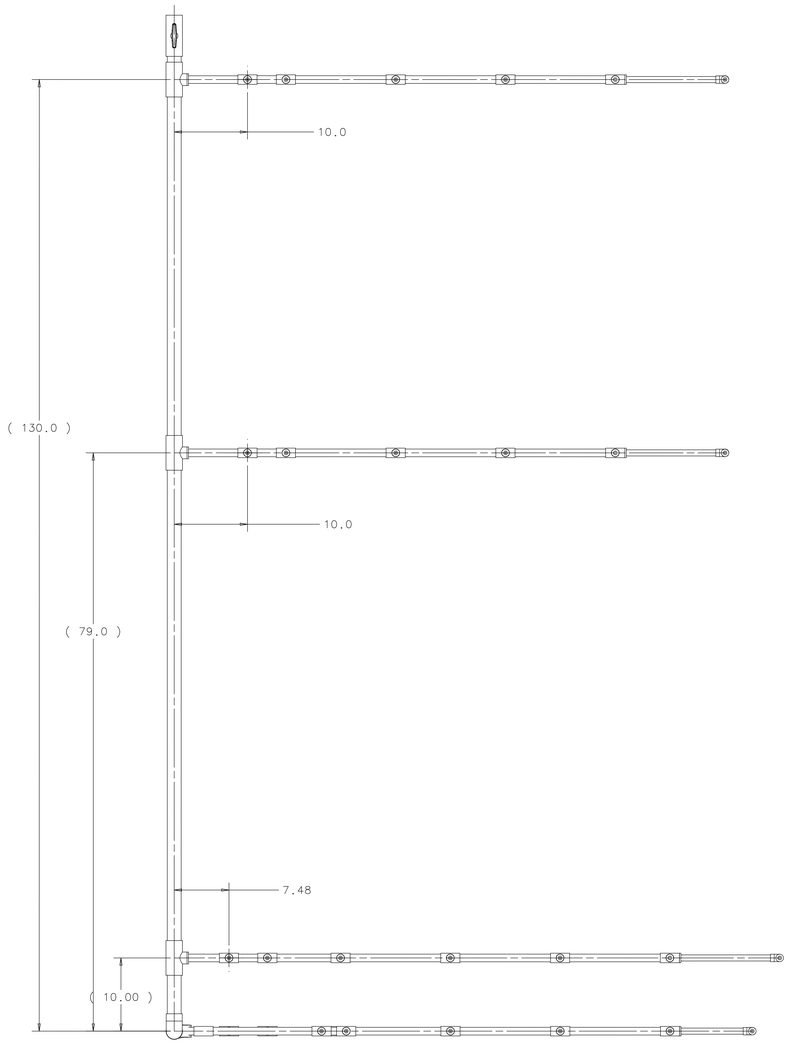

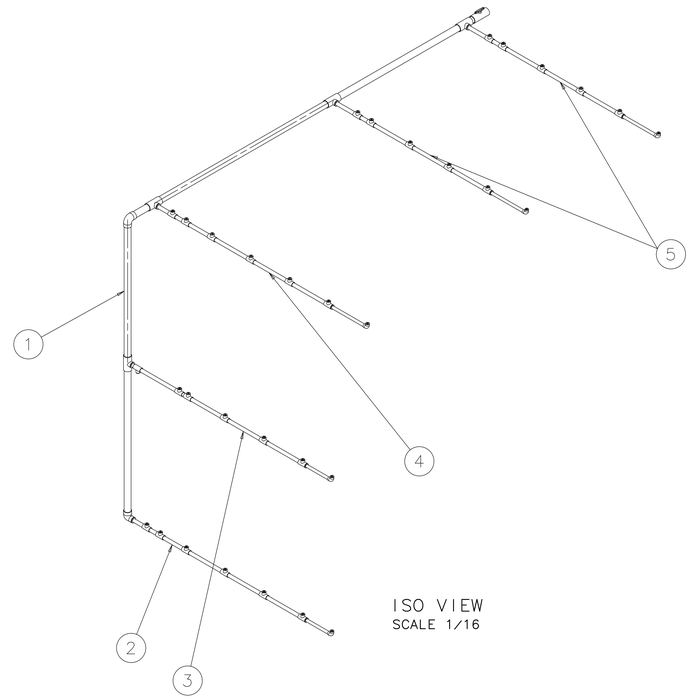

ISO VIEW
SCALE 1/16

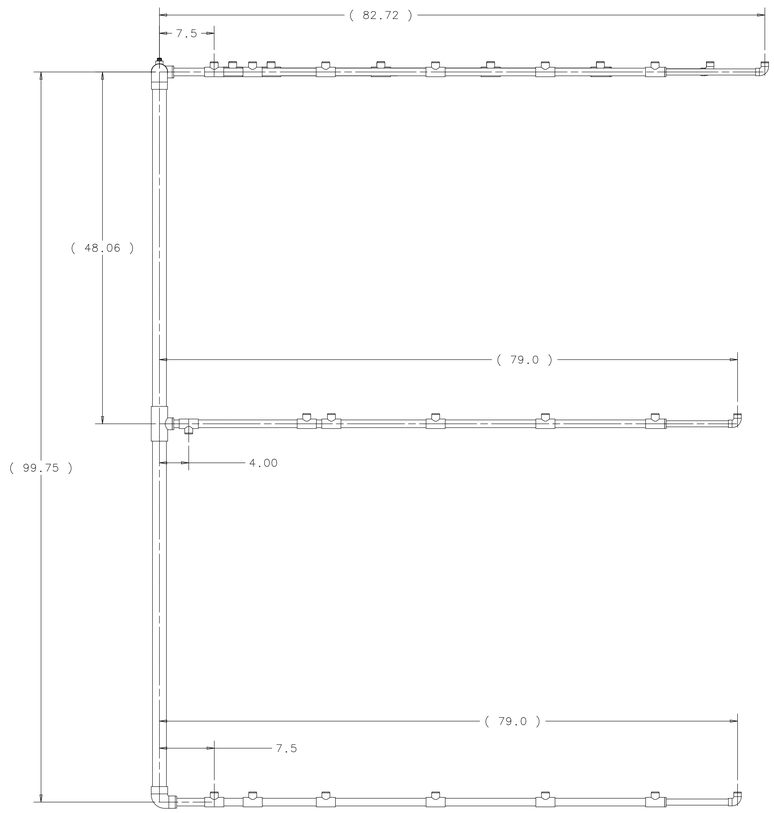

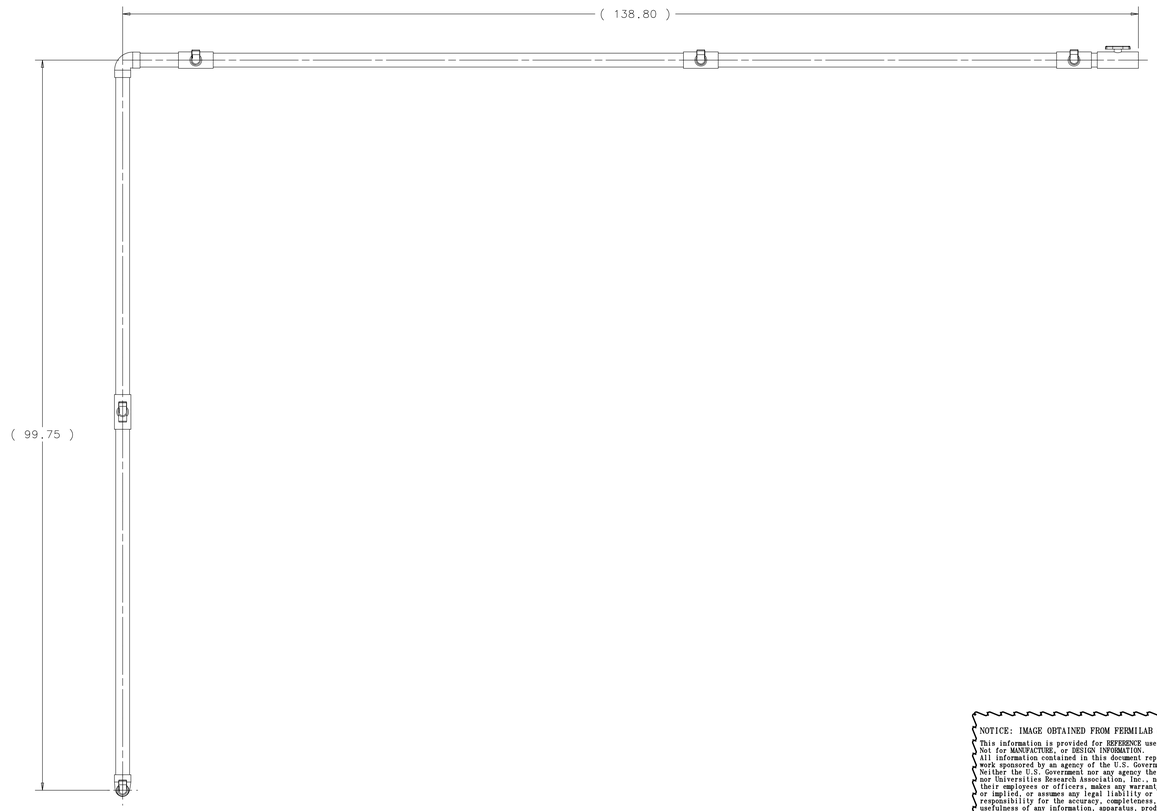

ITEM	PART NO.	DESCRIPTION OR SIZE	QTY.
5	MC-486103	CHIL BLK MU VERT SPLY MANF	2
4	MC-486102	CHIL BLK MU HOR SPLY MANF TP	1
3	MC-486100	CHIL BLK MU HOR SPLY MANF MD	1
2	MC-486099	CHIL BLK MU HOR SPLY MANF BT	1
1	MD-486098	NOVA MUON BLK SUPY FEED	1

PARTS LIST

UNLESS OTHERWISE SPECIFIED			ORIGINATOR	M.ZUCKERBROT	13-JUL-2010
.XX	.XXX	ANGLES	DRAWN	S.HENTSCHEL	13-JUL-2010
± .12	± ---	± ---	CHECKED	D.FRIEND	28-JUL-2010
			APPROVED	D.PUSHKA	28-JUL-2010

1. BREAK ALL SHARP EDGES MAX.
2. DO NOT SCALE DRAWING.
3. DIMENSIONS BASED UPON ASME Y14.5M 1994
4. MAX. ALL MACH. SURFACES 250
5. DRAWING UNITS: U.S. INCHES

USED ON: ME-486092

MATERIAL: SEE PARTS LIST ABOVE

FERMI NATIONAL ACCELERATOR LABORATORY
UNITED STATES DEPARTMENT OF ENERGY

NOVA-UTILITIES
APD TEC IPND COOLING
NOVA MUON CHILL SPY ASSM

SCALE	DRAWING NUMBER	SHEET	REV
1/8	3929.500-ME-486094	1 OF 1	

CREATED WITH : Ideas12NXSeries | GROUP: PPD/MECHANICAL DEPARTMENT

NOTICE: IMAGE OBTAINED FROM FERMILAB WEB SITE
This information is provided for REFERENCE use only.
Not for MANUFACTURE, or DESIGN INFORMATION.
All information contained in this document represents work sponsored by an agency of the U.S. Government.
Neither the U.S. Government nor any agency thereof, nor Universities Research Association, Inc., nor any of their employees or officers, makes any warranty, express or implied, or assumes any legal liability or responsibility for the accuracy, completeness, or usefulness of any information, apparatus, product or process disclosed, or represents that its use would not infringe privately owned rights.

REV	DESCRIPTION	DRAWN	DATE
		APPROVED	DATE

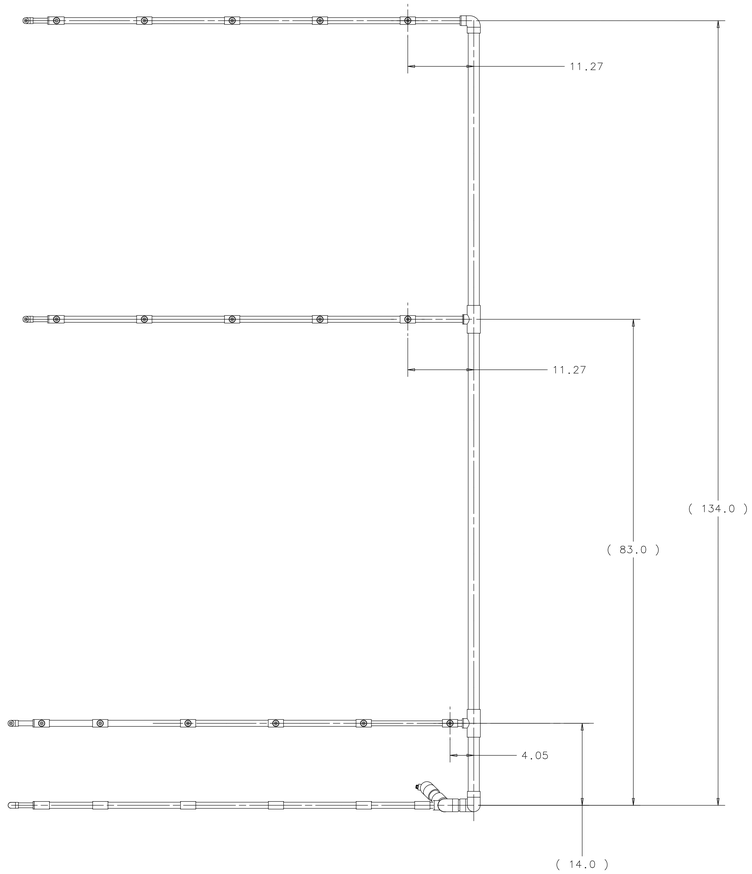

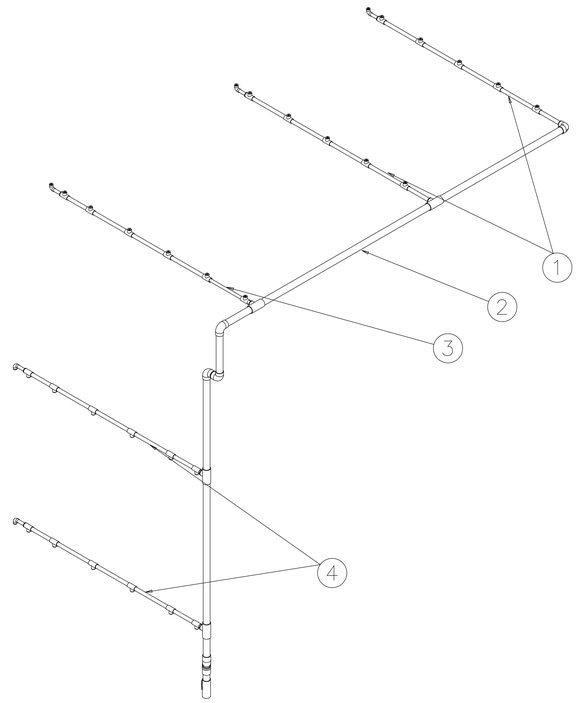

ISO VIEW
SCALE 1/16

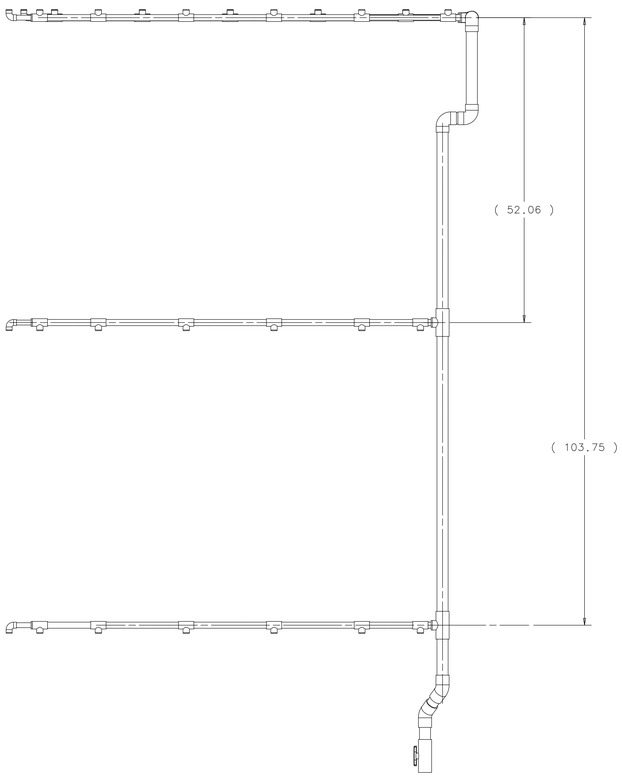

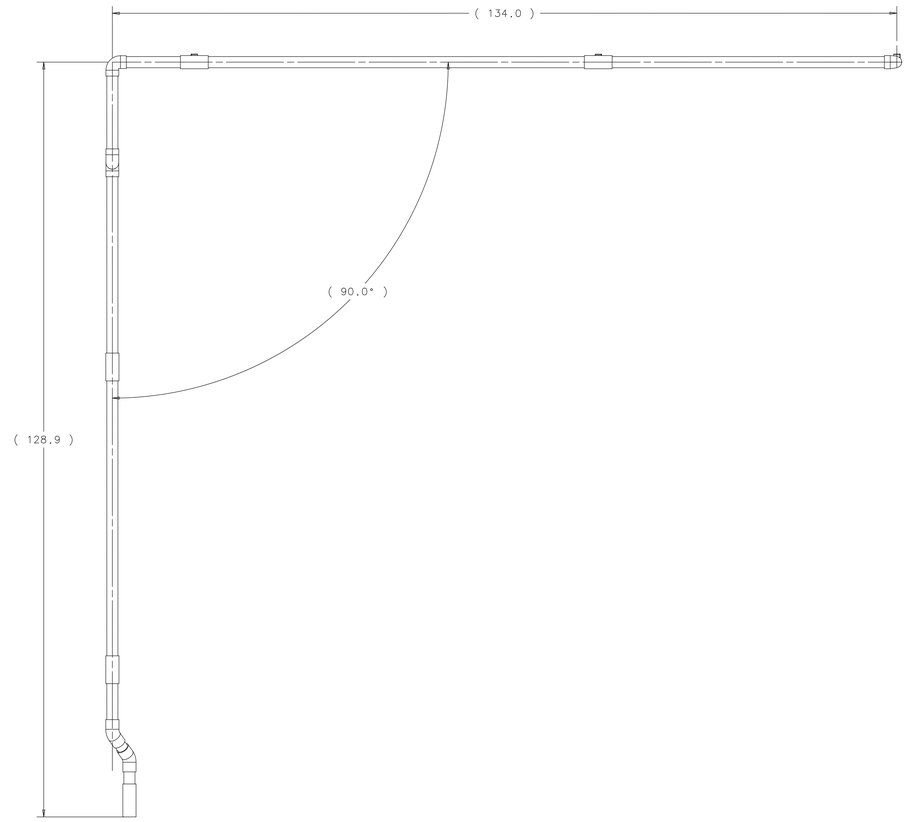

ITEM	PART NO.	DESCRIPTION OR SIZE	QTY.
4	MC-486104	NOVA CHIL BLK MU HOR RTN MANF	2
3	MC-486105	CHIL BLK MU HOR RTN TP MANF	1
2	MD-486107	NOVA MUON BLK CHIL RTN FEED	1
1	MC-486106	CHIL BLK MU VERT RTN MANF	2

PARTS LIST

UNLESS OTHERWISE SPECIFIED			ORIGINATOR	M.ZUCKERBROT	06-JUL-2010
.xx	.xxx	ANGLES	DRAWN	S.HENTSCHEL	06-JUL-2010
± .12	± ---	± ---	CHECKED	D.FRIEND	28-JUL-2010
1. BREAK ALL SHARP EDGES MAX.			APPROVED	D.PUSHKA	28-JUL-2010
2. DO NOT SCALE DRAWING. 3. DIMENSIONS BASED UPON ASME			USED ON	ME-486092	
4. MAX. ALL MACH. SURFACES 250			MATERIAL	SEE PARTS LIST ABOVE	
5. DRAWING UNITS: U.S. INCHES					

FERMI NATIONAL ACCELERATOR LABORATORY
UNITED STATES DEPARTMENT OF ENERGY

NOVA-UTILITIES
IPND APD COOLING SYSTEM
NOVA CHILL MUON RTN ASSY

SCALE	DRAWING NUMBER	SHEET	REV
1:10	3929.500-ME-486093	1 OF 1	

CREATED WITH : Ideas12NXSeries GROUP: PPD/MECHANICAL DEPARTMENT

NOTICE: IMAGE OBTAINED FROM FERMILAB WEB SITE
This information is provided for REFERENCE use only.
Not for MANUFACTURE, or DESIGN INFORMATION.
All information contained in this document represents work sponsored by an agency of the U.S. Government. Neither the U.S. Government nor any agency thereof, nor Universities Research Association, Inc., nor any of their employees or officers, makes any warranty, express or implied, or assumes any legal liability or responsibility for the accuracy, completeness, or usefulness of any information, apparatus, product or process disclosed, or represents that its use would not infringe privately owned rights.

REV	DESCRIPTION	DRAWN	DATE
		APPROVED	DATE

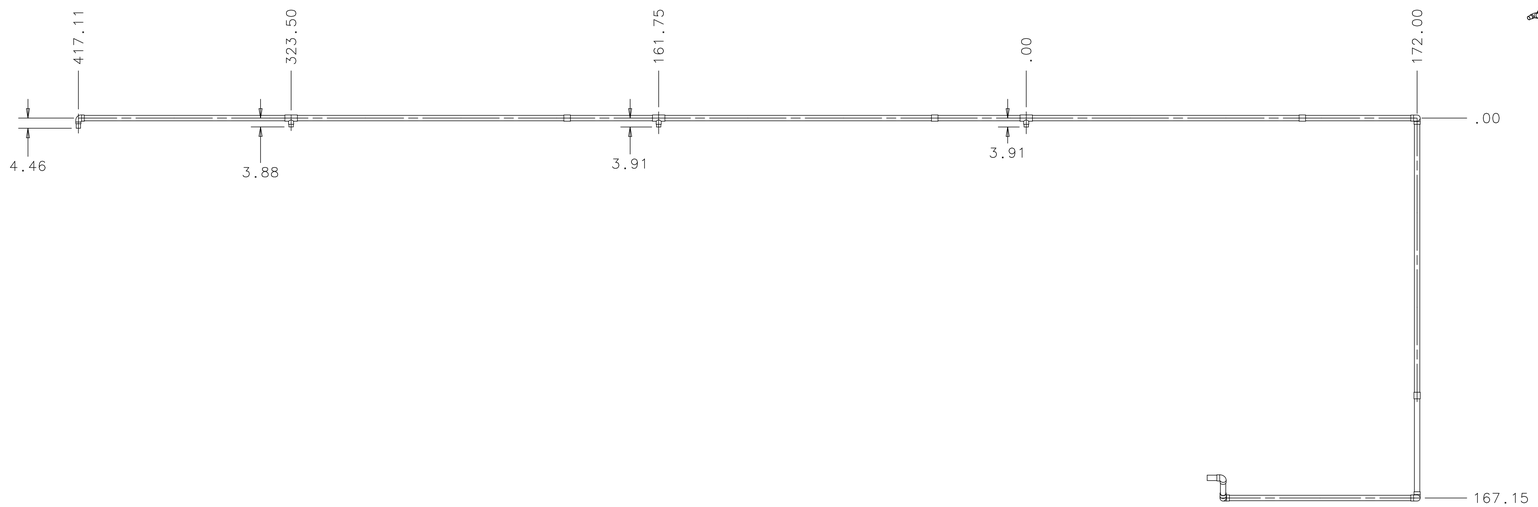

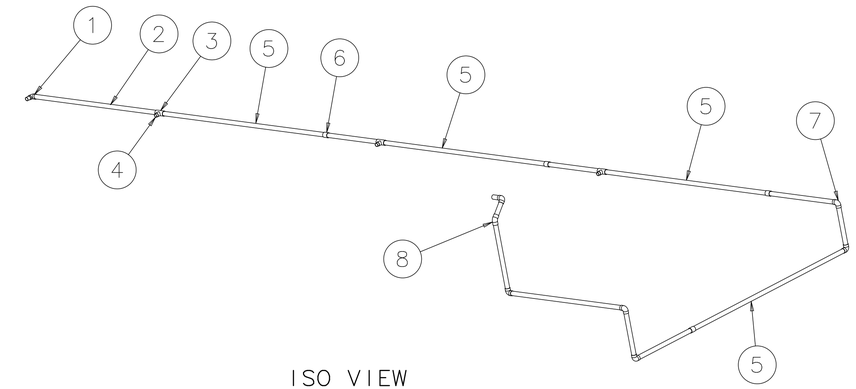

ISO VIEW

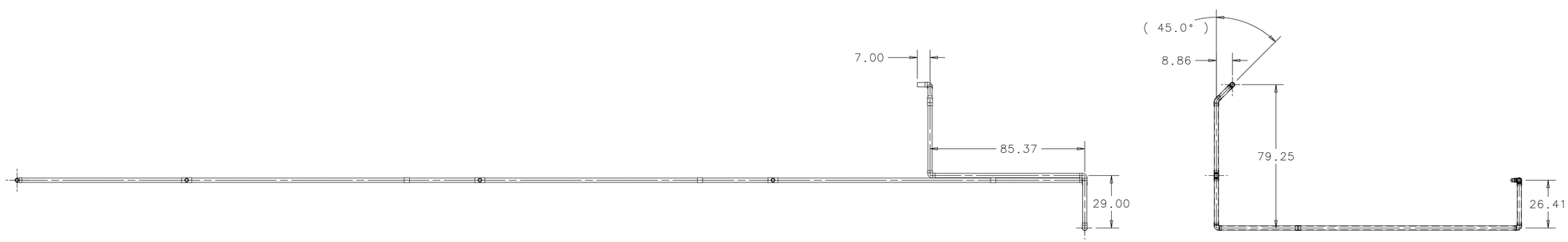

ITEM	PART NO.	DESCRIPTION OR SIZE	QTY.
8	COML	45° ELBOW ø2 SW ENDS SCHD 40 PVC	1
7	COML	90° ELBOW ø2 SW ENDS SCHD 40 PVC	6
6	COML	COUPLING ø2, SW ENDS SCHD 40 PVC	4
5	COML	PIPE ø2 X 120" LG SCHD 40 PVC	4
4	COML	PIPE ø1 1/2 X LENGTH TO SUIT SCH 40 PVC	4
3	COML	REDUCING TEE SW ENDS ø2 X ø1.5 X ø2 SCHD 40 PVC	3
2	COML	PIPE ø2 X LENGTH TO SUIT SCHD 40 PVC	12
1	COML	90° REDUCING ELBOW ø1 1/2 X ø2 SCHD 40 PVC SW ENDS	1

PARTS LIST

UNLESS OTHERWISE SPECIFIED			ORIGINATOR	M.ZUCKERBROT	19-JUL-2010
.xx	.xxx	ANGLES	DRAWN	S.HENTSCHEL	19-JUL-2010
± .12	± ---	± ---	CHECKED	D.FRIEND	28-JUL-2010
			APPROVED	D.PUSHKA	28-JUL-2010

1. BREAK ALL SHARP EDGES MAX.
2. DO NOT SCALE DRAWING.
3. DIMENSIONS BASED UPON ASME Y14.5M 1994
4. MAX. ALL MACH. SURFACES 250
5. DRAWING UNITS: U.S. INCHES

USED ON: ME-486092

MATERIAL: SEE PARTS LIST ABOVE

FERMI NATIONAL ACCELERATOR LABORATORY
UNITED STATES DEPARTMENT OF ENERGY

NOVA-UTILITIES
APD TEC IPND COOLING
NOVA CHILL SYS MAIN FEED

SCALE	DRAWING NUMBER	SHEET	REV
N/A	3929.500-MD-486119	1 OF 1	

CREATED WITH : Ideas12NXSeries | GROUP: PPD/MECHANICAL DEPARTMENT

NOTICE: IMAGE OBTAINED FROM FERMILAB WEB SITE

This information is provided for REFERENCE use only. Not for MANUFACTURE, or DESIGN INFORMATION. All information contained in this document represents work sponsored by an agency of the U.S. Government. Neither the U.S. Government nor any agency thereof, nor Universities Research Association, Inc., nor any of their employees or officers, makes any warranty, express or implied, or assumes any legal liability or responsibility for the accuracy, completeness, or usefulness of any information, apparatus, product or process disclosed, or represents that its use would not infringe privately owned rights.