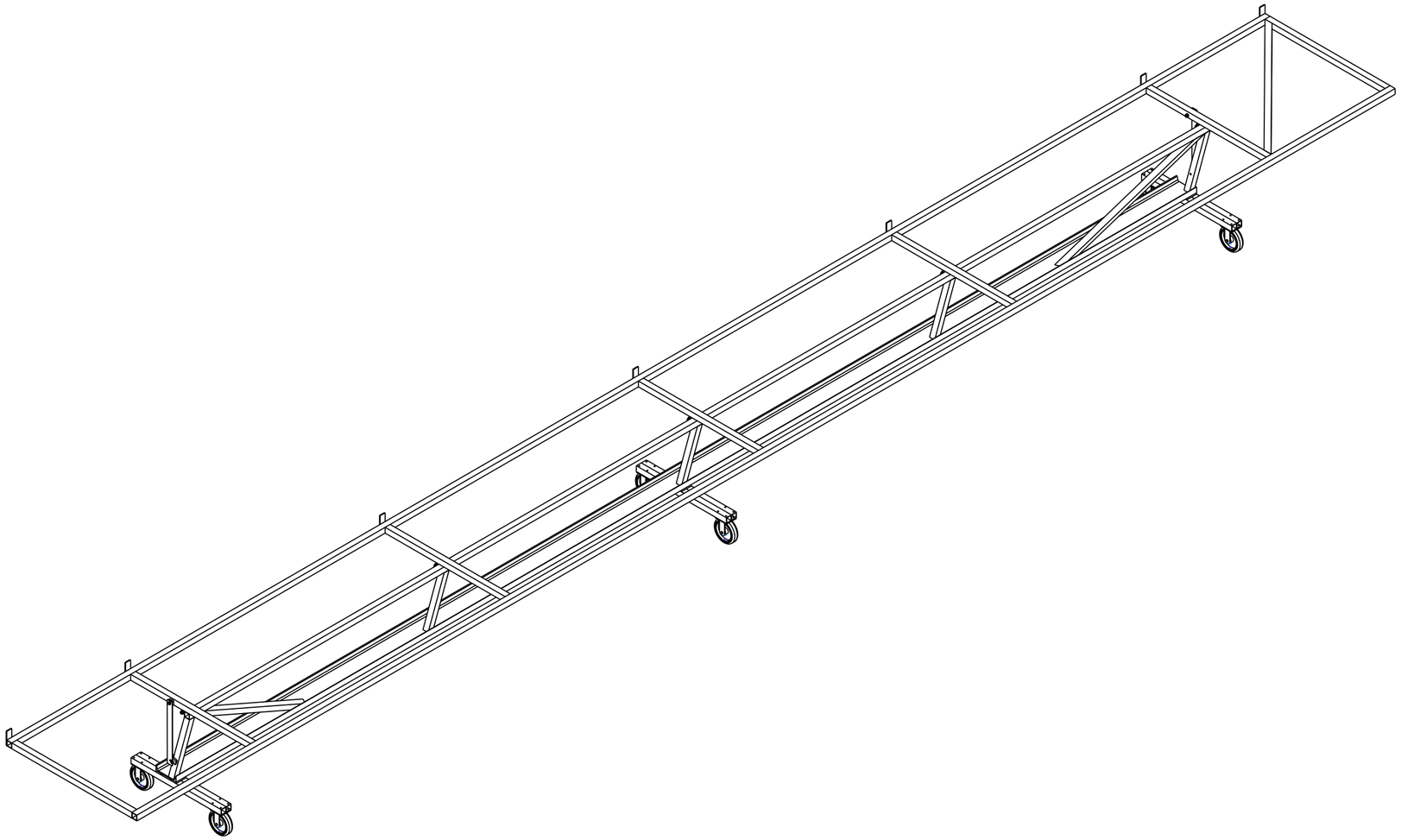

SCALE 0.035

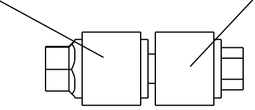

SCALE 0.500

HINGE GETS WELDED TO THE TABLE
WITH TOP OF HINGE LEVEL WITH
SURFACE OF AL_BEAM AND WITH END
OF BEARING FLUSH WITH
AL_MAIN_SUPPORT

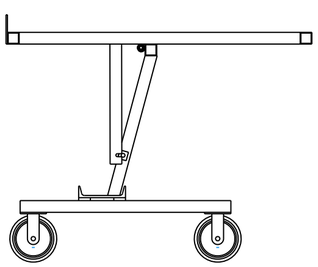

SCALE 0.050

HALF OF THE HINGE GETS WELDED TO THESUPPORT
STRUCTOR AND THE OTHER HALF GETS WELDED
TO THE TABLETOP

TOLERANCES:
ALL DIMENSIONS HAVE A GLOBAL
TOLERANCE OF +/- 0.125 INCHES
UNLESS SPECIFIED OTHERWISE

MODULE HOLDER
2010, JAN. 15
JASON LEGATT

MAIN SUPPORT
ASSEMBLY
QUANTITY: x1

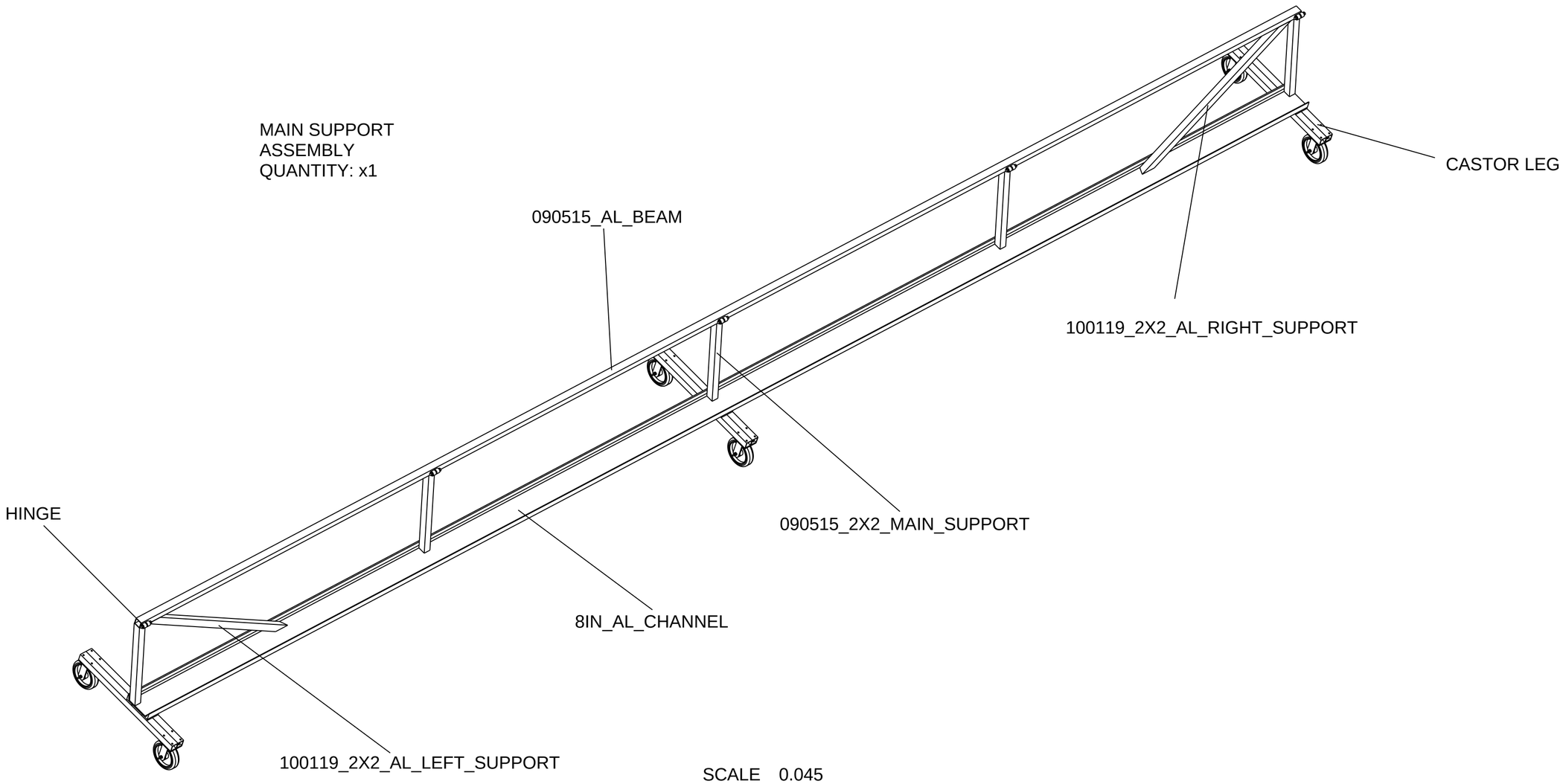

SCALE 0.045

MODULE HOLDER
2010, JAN. 15
JASON LEGATT

BEARING WELDED SO IT IS FLUSH WITH AL BEAM
AND ALUMINUM END FLUSH WITH MAIN SUPPORT

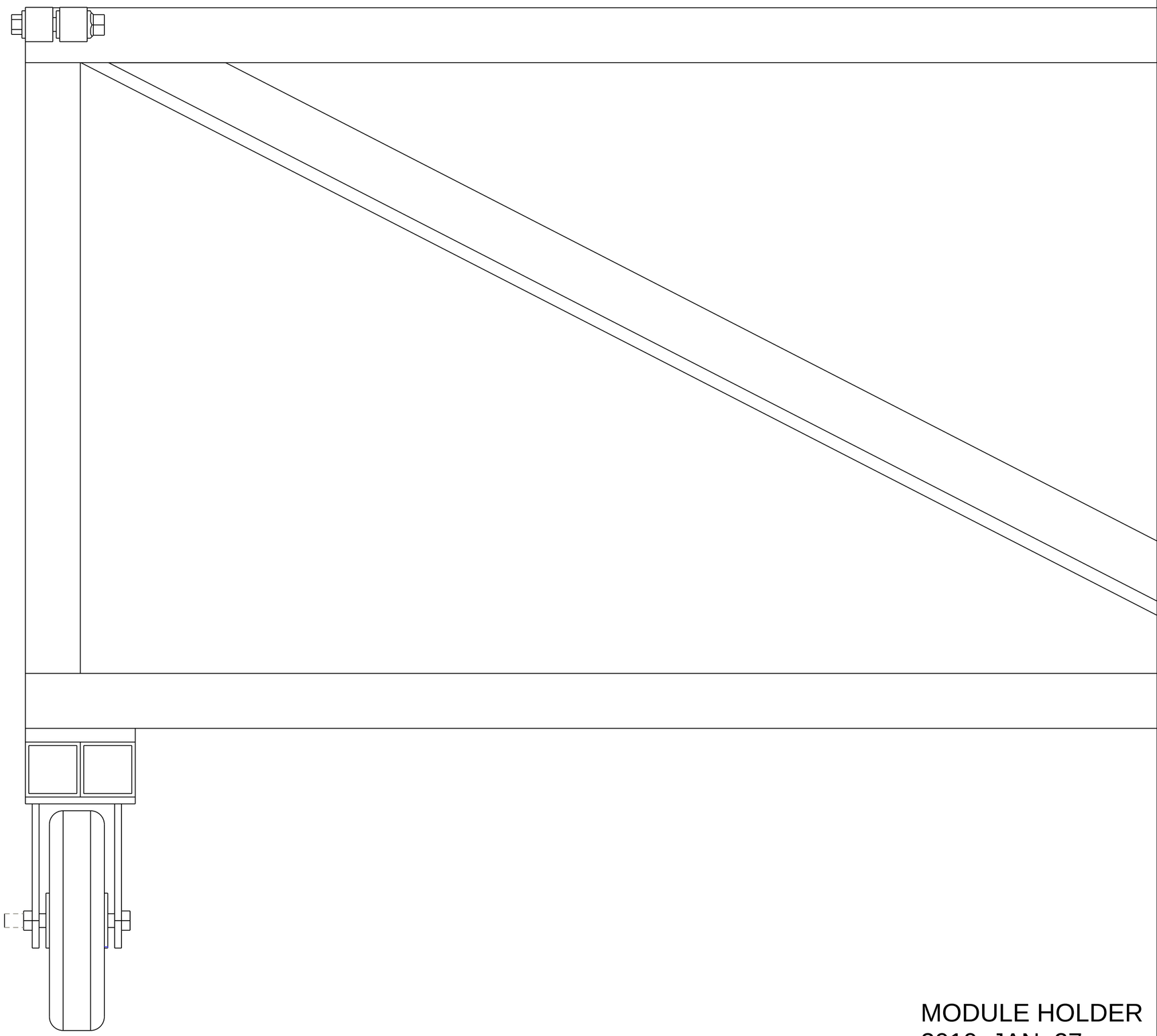

MODULE HOLDER
2010, JAN. 27
JASON LEGATT

EXAMPLE OF MIDDLE HINGES

HINGE FLUSH WITH TOP OF AL BEAM
AND BEARING END FLUSH WITH LEFT SIDE OF MAIN SUPPORT

RIGHT END HINGE

HINGE FLUSH WITH TOP OF AL BEAM
AND BEARING END FLUSH WITH OUTSIDE EDGE

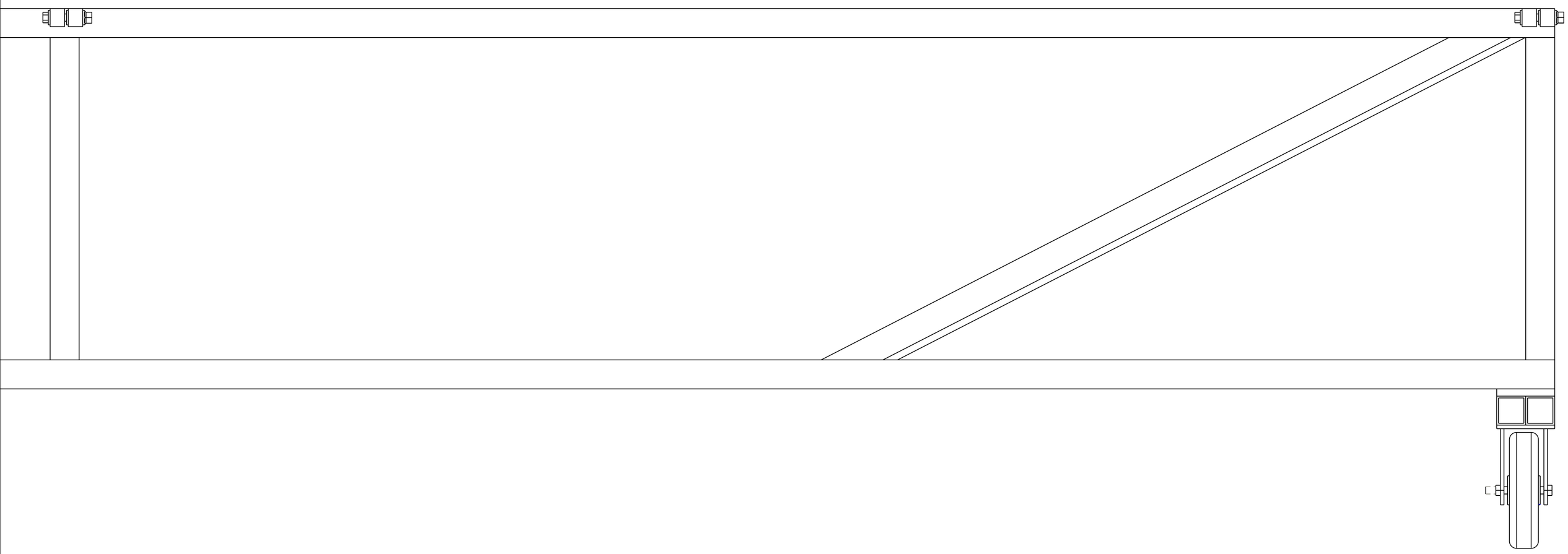

MODULE HOLDER
2010, JAN. 29
JASON LEGATT

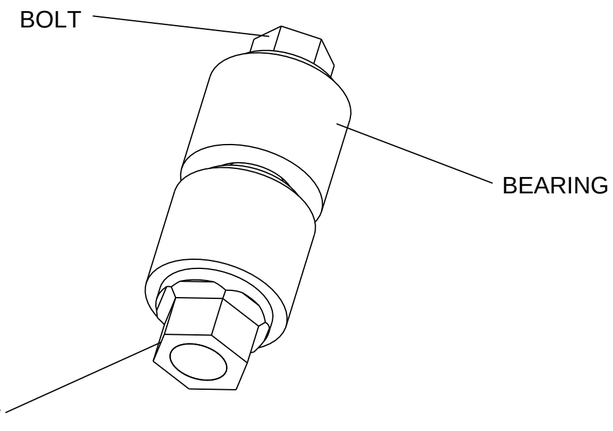

BEARING HINGE
QUANTITY: x5

REQUIRES:
x1 1/2-13 UNC x 3-1/2" LENGTH
x1 MATCHING NUT WITH NYLON LOCK

FLANGE BEARING PRESSED
INTO ALUMINUM SLEEVE

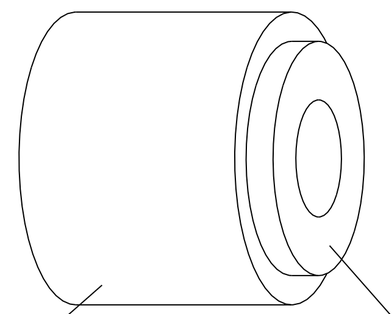

BEARING
QUANTITY: x2

SLEEVE
6061 ALUMINUM
1-1 \4" OD 3/4"ID
1/4" WALL THICKNESS
QUANTITY: x1

BRONZE FLANGE BEARING
MCMASTER
PART NO. 6338K424
QUANTITY: x1

MODULE HOLDER
2010, JAN. 19
JASON LEGATT

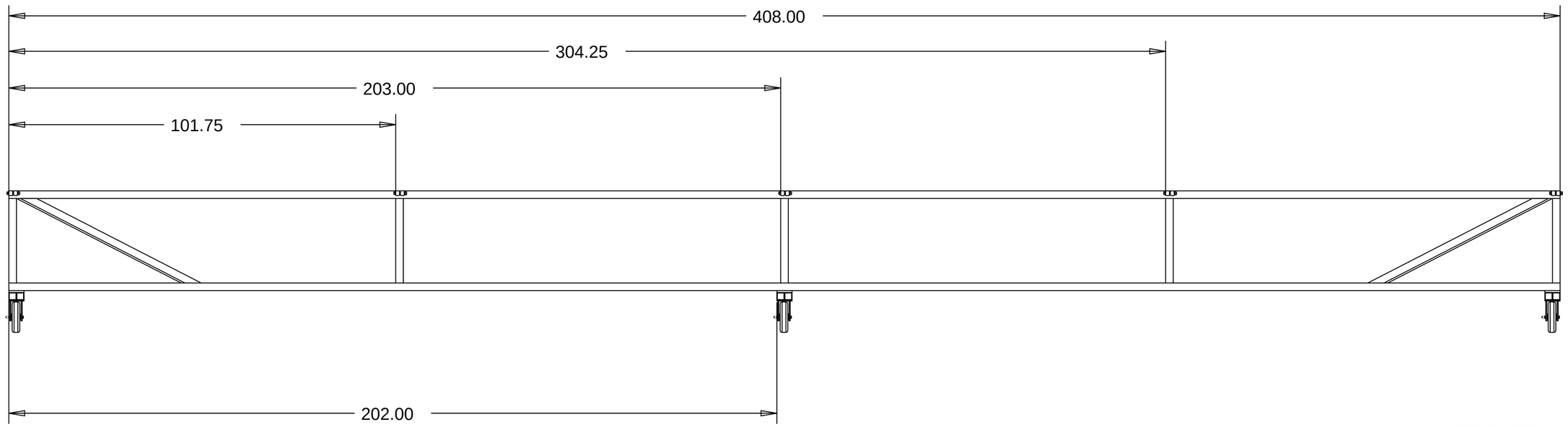

HINGES ARE WELDED FLUSH
WITH SIDE OF MAIN SUPPORT

END CASTOR LEGS ARE
WELDED FLUSH WITH ENDS
OF AL CHANNEL

SCALE 0.045

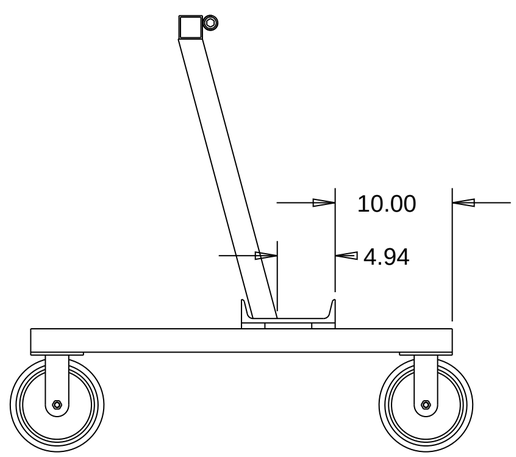

SCALE 0.100

MODULE HOLDER
2010, JAN. 15
JASON LEGATT

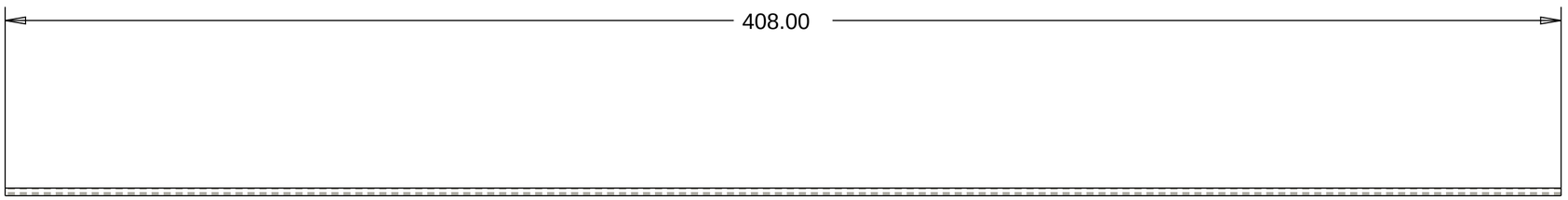

SCALE 0.035

8IN_AL_CHANNEL
ALUMINUM
QUANTITY: x1

8" U CHANNEL
W/ 2" WALL

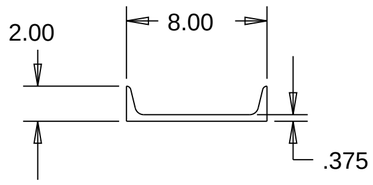

SCALE 0.150

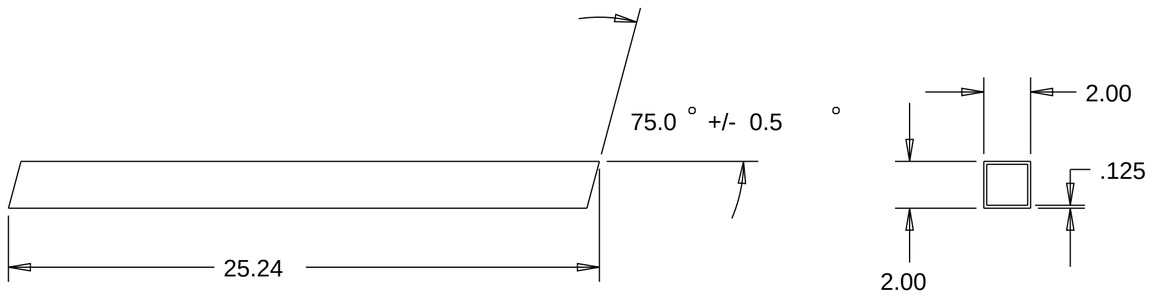

090515_2X2_AL_MAIN_SUPPORT
ALUMINUM
QUANTITY: x5

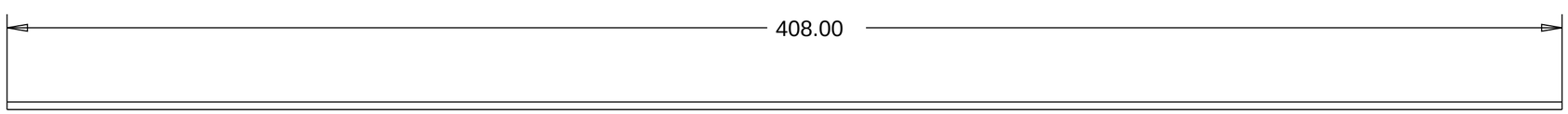

SCALE 0.035

090515_AL_BEAM
ALUMINUM
QUANTITY: x1

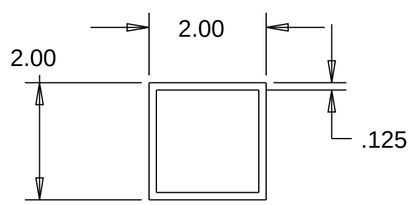

SCALE 0.500

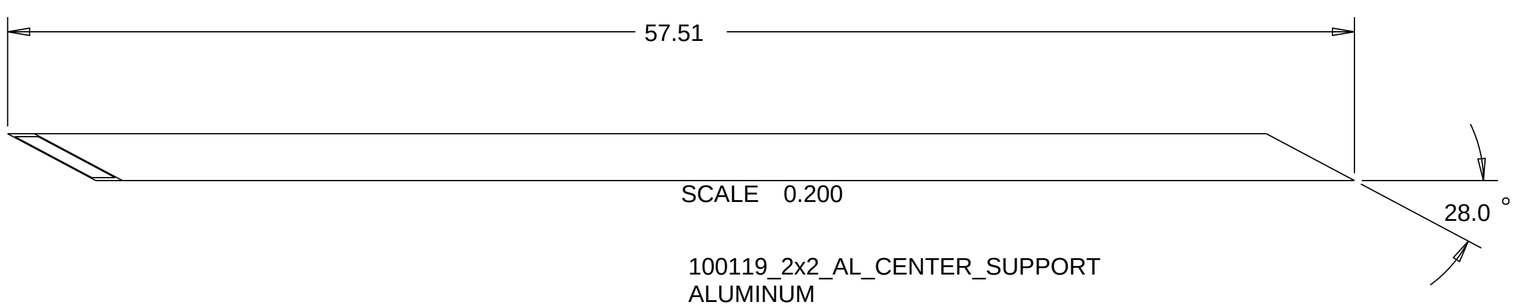

SCALE 0.200

100119_2x2_AL_CENTER_SUPPORT
ALUMINUM
QUANTITY: x2

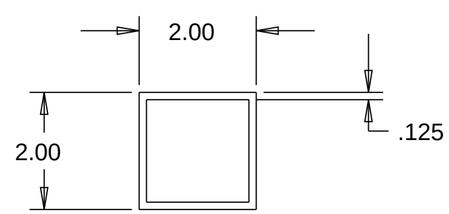

SCALE 0.500

MODULE HOLDER
2010, JAN. 15
JASON LEGATT

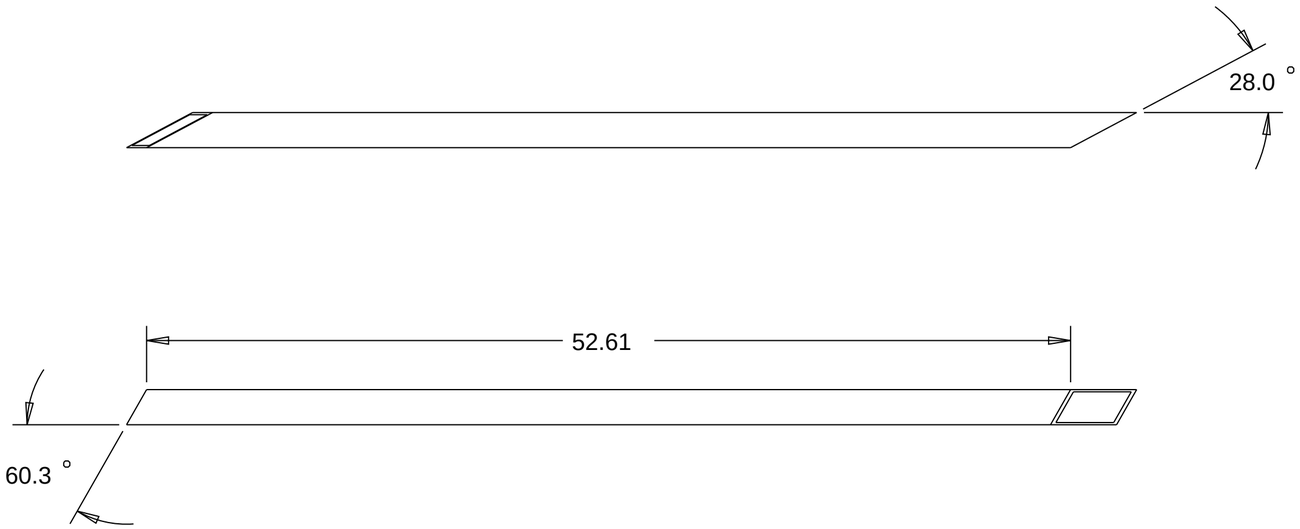

SCALE 0.150

100119_2X2_AL_RIGHT_SUPPORT
ALUMINUM
QUANTITY: x1

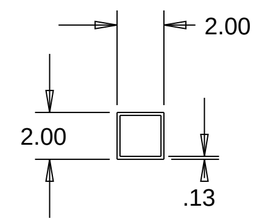

SCALE 0.200

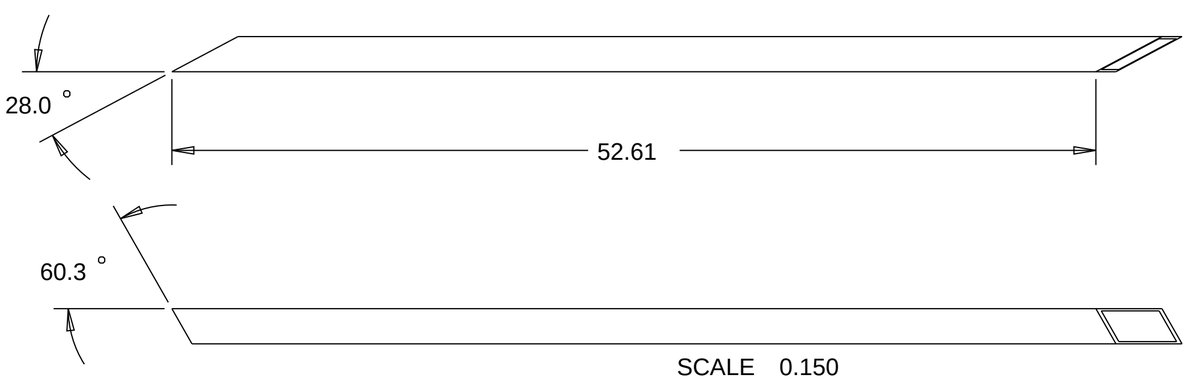

SCALE 0.150

100119_2X2_AL_LEFT_SUPPORT
ALUMINUM
QUANITY: x1

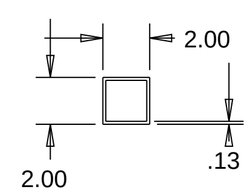

SCALE 0.200

MODULE HOLDER
2010, JAN. 19
JASON LEGATT

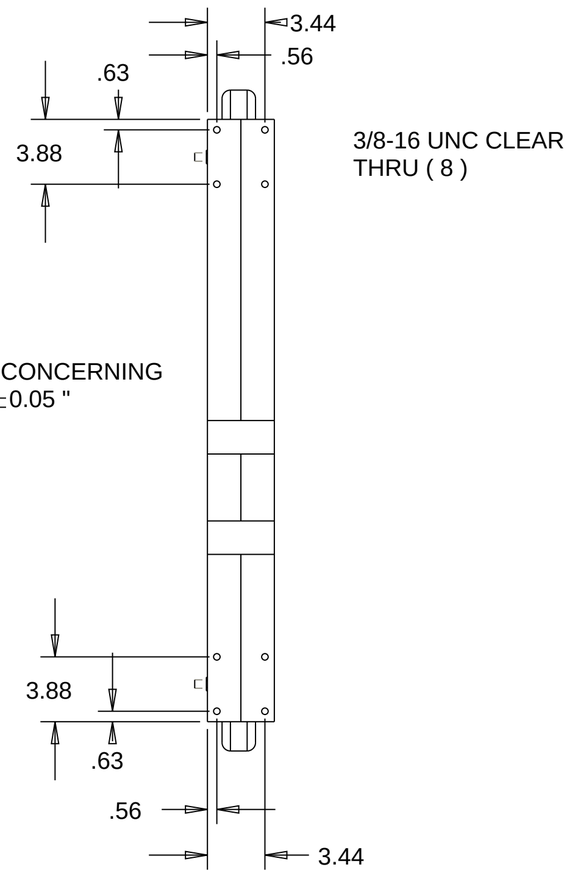

NOTE: TOLERANCES CONCERNING
HOLE LOCATIONS: ±0.05 "

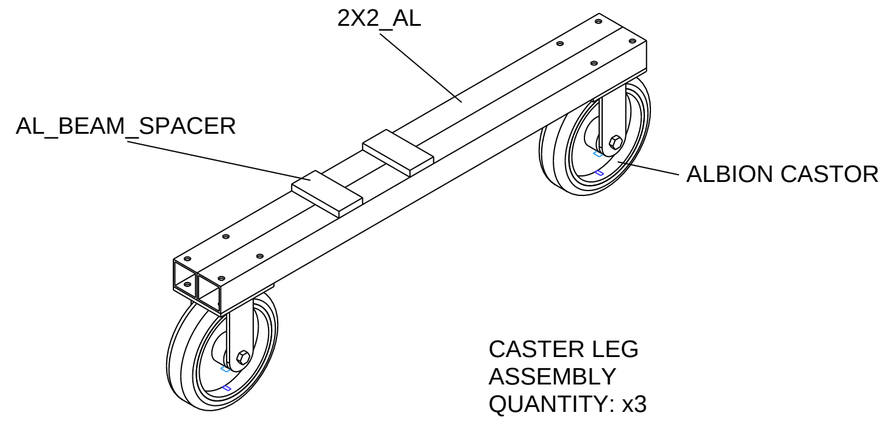

CASTER LEG
ASSEMBLY
QUANTITY: x3

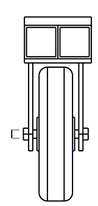

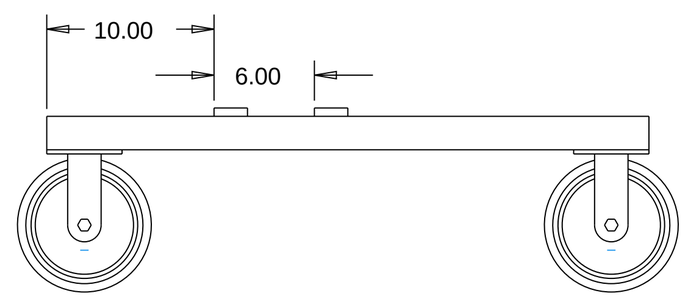

MODULE HOLDER
2010, JAN. 15
JASON LEGATT

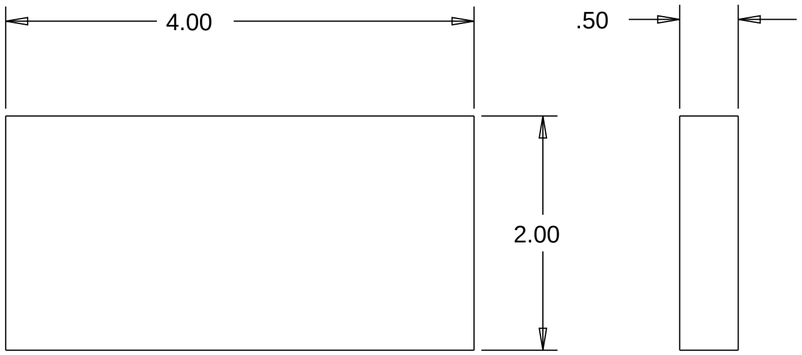

AL_BEAM_SPACER
ALUMINUM
QUANTITY: x6

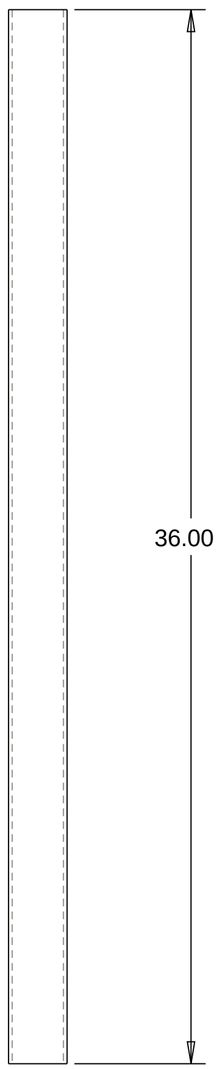

2X2_ AL
ALUMINUM
QUANTITY: x6

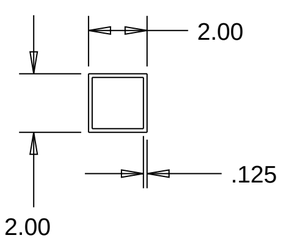

SCALE 0.250

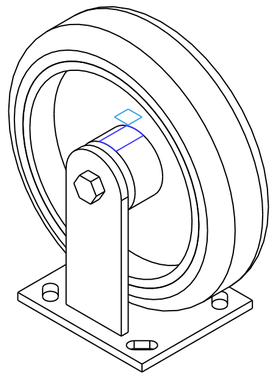

ALBION CASTOR
QUANTITY: x6

MODULE HOLDER
2010, JAN. 15
JASON LEGATT