REV	DESCRIPTION	DATE

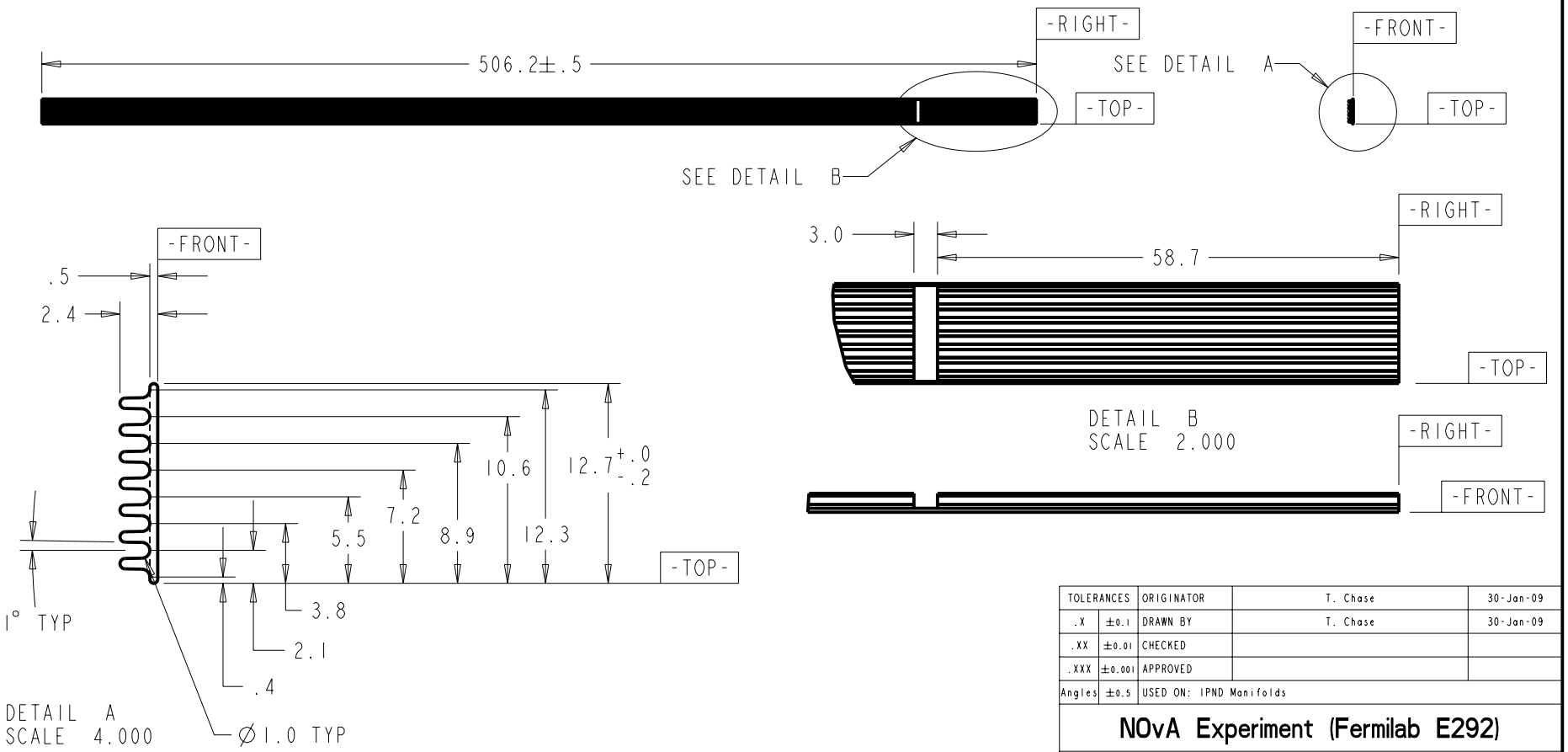

NOTES	
1	MATERIAL: TYPE I RIGID PVC, BLACK
2	STRAIGHTNESS TOLERANCE: ±1.5 mm/m
3	FLATNESS TOLERANCE: ±2 mm/m
4	QUANTITY: 700

TOLERANCES		ORIGINATOR	T. Chase	30-Jan-09
.X	±0.1	DRAWN BY	T. Chase	30-Jan-09
.XX	±0.01	CHECKED		
.XXX	±0.001	APPROVED		
Angles	±0.5	USED ON: IPND Manifolds		

NOvA Experiment (Fermilab E292)

UNIVERSITY OF MINNESOTA

IPND Bottom Raceway Fiber Tray (Grooved)

Finish	Model Type: PART	Model File Name: IPND_BOT_TRAY_GROOVED	Drawing File Name: IPND_BOT_TRAY_GROOVED	
	Scale 0.500:1	Drawing Number	Revision	Sheet 1 of 1
	All dimensions are in mm unless specified otherwise			