REV	DESCRIPTION	DATE

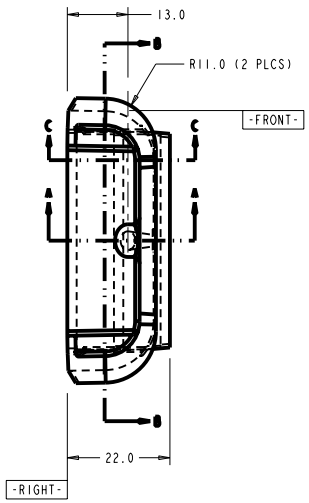

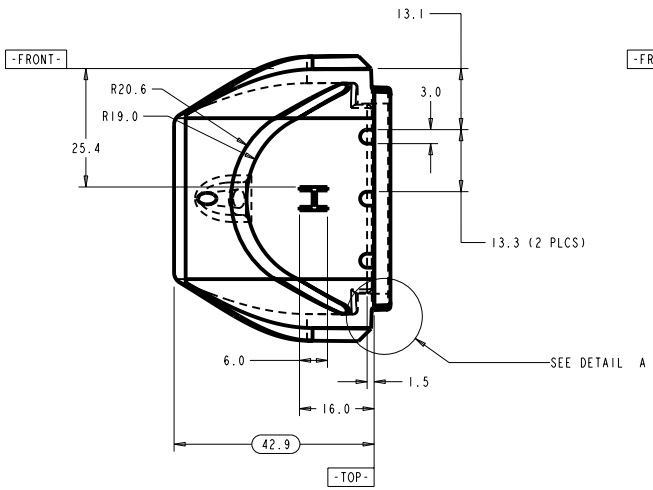

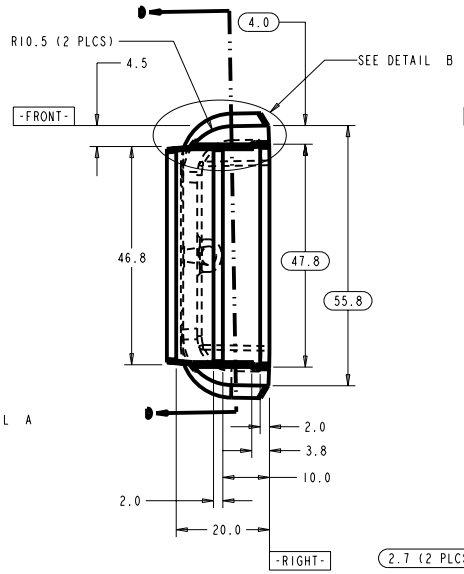

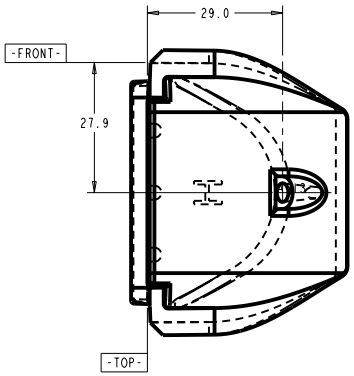

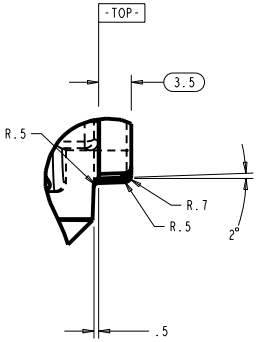

DETAIL A
SCALE 4.000

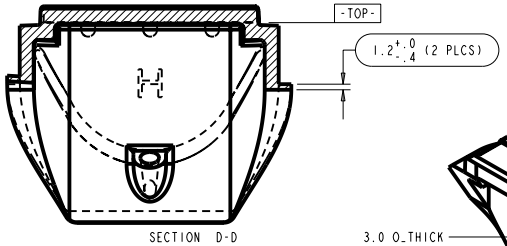

SECTION D-D

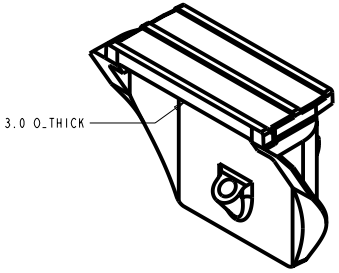

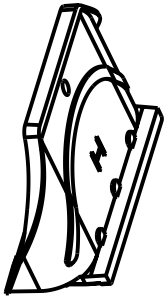

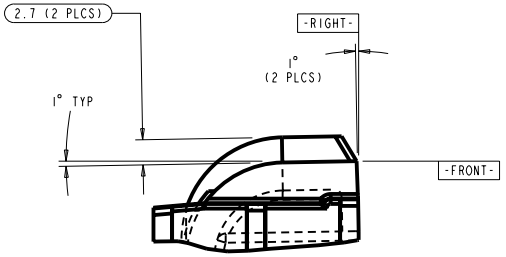

DETAIL B
SCALE 4.000

NOTES	
1	MATERIAL: TYPE I RIGID PVC, GEON M3800, BLACK
2	DO NOT USE MOLD RELEASE
3	MATERIAL REGRIND NOT TO EXCEED SUPPLIER RECOMMENDATIONS
4	PART VOLUME: 11.2 CC (.68 IN^3)
5	QUANTITIES: 800 (PROTOTYPING), 12,000 (PRODUCTION)

TOLERANCES		ORIGINATOR	T. Chase	06-Jul-07
.X	±0.1	DRAWN BY	T. Chase	06-Jul-07
.XX	±0.01	CHECKED		
.XXX	±0.001	APPROVED		
ANGLES	±0.5	USED ON: NOvA module manifolds		

NOvA Experiment (Fermilab E929)

University of Minnesota

End Plate Side Seal, Horizontal

Model Type: PART	Model File Name: END_PLATE_SIDE_SEAL_HORIZ	Drawing File Name: END_PLATE_SIDE_SEAL_HORIZ
Scale 2.000:1	Drawing Number	Revision / Sheet 1 of 2
Finish	All dimensions are in mm unless specified otherwise	